POLYTESTS
TESTING THROUGH YOUR REALITY

TEST REPORT

TEST OF A HYBRID WOOD STOVE FOR EMISSIONS AND EFFICIENCY

PER EPA METHODS 28R AND ASTM E2515 and ASTM E2780, MAY 2015

Client:

Hearthstone QHHP

317 Stafford ave.
Morrisville, Vt 05661

Model name: Heritage 8024

Attention: Rafaël Sanchez

TESTED BY:
Services Polytests Inc.
695-B Gaudette
St-jean-sur-Richelieu, QC, J3B 7S7

TEST DATES: October 2nd to October 19th 2023
REPORT DATE: October 24th 2023
Project number: PI-20294

All services undertaken are subject to the following general policy: Reports are submitted for exclusive use of the clients to whom they are addressed. This document may not be reproduced except in its entirety without the written permission from Services Polytests Services Polytests have not been involved in any R&D design consulting regarding this unit as requested by the NSPS.

Tested:

Maxime Martin

written by:

Danick Power, P. Eng

Verified by third party certifier (PFS):

SUMMARY

1 Introduction 5
1.1 General 5
1.2 Test unit information 5
1.3 Results 5
1.4 Pretest information 6
2 Summary of test results 6
2.1 Emissions 6
2.2 Average calculation 7
2.3 Test facility conditions 7
2.4 Fuel qualities 8
2.5 Dilution tunnel flow rate measurements and sampling data (ASTM E2515) 8
2.6 Dilution tunnel dual train precision 9
2.7 General summary of results 9
3 Process description 10
3.1 Discussion 10
3.2 Unit dimensions 10
3.3 Air supply system 11
3.4 operation during test 12
3.5 Start-up operation 13
3.6 Sampling locations 13
3.7 Drawings 13
3.8 Emissions efficiency testing equipment list 13
4 Sampling methods 13
4.1 Particulate sampling 13
5 Quality assurance 14
5.1 Instrument calibration 14
5.1.1 Gas meters 14
5.1.2 SCALES 14
5.1.3 Gas analyzers 14
5.2 Test method procedures 14
5.2.1 Leak check procedures 14
5.2.2 Tunnel velocity flow measurement 14
5.2.3 Pm sampling proportionality (ASTM E2515) 14

List of Revision:

List of appendixes

APPENDIX 1: Raw data, forms and results

APPENDIX 2: Proportionality results

APPENDIX 3: Calibration data

APPENDIX 4: Unit pre burn

APPENDIX 5: Participants

APPENDIX 6: Drawings and specifications

APPENDIX 7: Operator's manual

APPENDIX 8: Photographs of test set up

APPENDIX 9: Test load photographs

APPENDIX 10: Laboratory Operating Procedures

APPENDIX 11: Sample calculations

APPENDIX 12: Volume calculations

APPENDIX 13: Operating instruction

APPENDIX 14: Drawing Air flow pattern

APPENDIX 15: WHA, CoC, 30Day Notice, Other

1 INTRODUCTION

1.1 GENERAL

Laboratory

- Location: Services Polytests Inc., 695-B Gaudette St-jean-sur-Richelieu QC, Canada J3B 7S7
- Elevation: 100 feet above sea level

Test program

- Purpose: unit qualification NSPS 2020
- Test dates: October 2nd to October 19th 2023
- Test methods used:
  - Particulate emissions: ASTM E2780-10; ASTM E2515-11 methods 28R as referred into 40 CFR Part 60 Subpart AAA
  - Efficiency: CSA B415.1-10

1.2 TEST UNIT INFORMATION

General

- Manufacturer: Hearthstone
- Product type: Hybrid wood stove
- Combustion system: catalytic, with pre combustion
- Unit tested: Heritage 8024
- Option: optional convection fan can be installed on the wood stove

1.3 RESULTS

Emission results obtained

- Average emission rate: 1,1 grams/hour
- Average Efficiency: 77 %

Conformity: NSPS Phase 2020

1.4 PRETEST INFORMATION

Unit condition: The unit was received by carrier first week of September 2023. The 50hrs of aging was done by Service Polytests at medium heat draw (all data in Appendix 4).

Set up

- Venting system type: 6-inch diameter insulated chimney
- System height from floor: 15 feet
- Particularities: The unit was tested with the convection Fan ON for average numbers (Test #1,2,3 and 4), and one confirmation test is done without any convection fan (test #5). Run 6 & 7 were done with an alternative catalyst (WDS-146).

Break in period

- Duration: the unit was pre burned by the laboratory and run for at least 50 hours with each catalyst, adequate documentation of fuel additions, flue and unit temperatures recorded.
- Fuel: BC FIR between 19% and 25%

2 SUMMARY OF TEST RESULTS

2.1 EMISSIONS

Run Number	Test Date (YY-MM-DD)	Emission Rate (g/hr)	Burn Rate (kg/hr)	1st hour Emission Rate (g/hr)	CSA B415.1 CO emission Gr/hr	CSA B415.1 emission Gr/Mj	Heat output (BTU/HR)	(OHE) % HHV
1	23-10-02	2,15	2,165	5,44	182,33	0,07	29 191	71,73%
2	23-10-03	1,77	0,868	3,49	23,89	0,13	12 889	79,00%
3	23-10-04	0,45	1,178	2,50	10,80	0,03	17 078	77,48%
4	23-10-05	0,56	1,592	1,02	55,74	0,02	23 252	77,71%
5	23-10-10	1,69	0,935	7,08	25,63	0,12	13 697	77,95%
6	23-10-18	2,02	2,249	5,62	213,16	0,06	29 971	70,90%
7	23-10-19	0,98	0,859	2,73	15,90	0,07	12 916	80,01%

Run 6 & run7: for catalyst equivalency (compliant)
Run 5: for no fan confirmation (compliant)

2.2 AVERAGE CALCULATION

Test No.	Burn Rate (Kg/hr)	(E) Ave. Emission Rate g/hr	(OHE) %	Heat Output (BTU/HR)	CSA B415.1 CO emission g/min
2	0,87	1,771	79,0%	12 889	0,40
3	1,18	0,454	77,5%	17 078	0,18
4	1,59	0,556	77,7%	23 252	0,93
1	2,16	2,155	71,7%	29 191	3,04
Weighted particulate emission average of 4 test runs: 1,1 grams per hour.					
Weighted average HHV efficiency of 4 test runs: 77,3 %.					
Average Co 1,1 gr/min					

2.3 TEST FACILITY CONDITIONS

Run Number	Room Temperature		Barometric pressure		Relative humidity		Air Velocity	
	Before (F)	After (F)	Before (in Hg)	After (in Hg)	Before (%)	After (%)	Before (ft/min)	After (ft/min)
1	74	72	30,062	29,943	50,4	48,6	0	0
2	75	73	29,914	29,825	61,2	54,3	0	0
3	77	78	30,002	29,825	66,2	66,8	0	0
4	79	84	29,943	29,825	63,4	48,3	0	0
5	71	73	29,530	29,560	45,1	46,8	0	0
6	73	76	29,943	29,914	41,7	40,3	0	0
7	72	72	29,943	29,884	40,7	40,3	0	0

2.4 FUEL QUALITIES

Run Number	Pre-test Load			Test Load						
	Loading Weight Wet Basis (lbs)	Moisture Content Dry Basis (%)	Coal bed Weight (lbs)	Weight Wet Basis (lbs)	Density Wet Basis (lbs/cuft)	Moisture Content Dry Basis (%)	Piece Length (in.)	Number of 2X4's	Number of 4x4's	Number of Spacers
1	16,20	19,91	3,1	15,30	7,050	20,20	17,5	3	2	16
2	16,75	20,59	3,2	15,16	6,988	19,76	17,5	3	2	16
3	16,07	21,14	3,1	15,35	7,073	20,20	17,5	3	2	16
4	16,34	20,66	3,2	15,57	7,176	19,92	17,5	3	2	16
5	16,64	20,52	3,3	15,83	7,297	20,05	17,5	3	2	16
6	16,99	20,74	3,4	15,82	7,291	21,18	17,5	3	2	16
7	16,44	20,86	3,4	15,84	7,300	20,67	17,5	3	2	16

2.5 DILUTION TUNNEL FLOW RATE MEASUREMENTS AND SAMPLING DATA (ASTM E2515)

Average dilution tunnel measurements				Sample Data			
Run Number	Burn Rate (Min)	Volumetric Flow Rate (dscf/min)	Total Temperatures (°R)	Volume sampled (DSCF)		Particulate catch (mg)	
				1	2	1	2
1	160	351,08	554,92	27,243	28,935	2,80	3,00
2	397	352,60	545,90	73,131	76,618	6,00	6,60
3	295	349,57	550,67	50,762	53,045	1,10	1,20
4	222	344,91	554,37	38,997	40,809	1,10	1,10
5	384	343,82	540,96	65,591	69,521	5,40	5,70
6	158	350,47	555,19	26,731	28,411	2,60	2,76
7	416	356,70	539,78	70,469	74,340	3,30	3,40

2.6 DILUTION TUNNEL DUAL TRAIN PRECISION

Run Number	Sample Ratio		Total Emission (g)			
	Train 1	Train 2	Train 1	Train 2	% Deviation	Deviation g/Kg
1	2061,97	1941,39	5,73	5,77	0,34%	0,007
2	1914,10	1826,99	11,44	12,00	2,41%	0,098
3	2031,50	1944,08	2,19	2,28	2,01%	0,015
4	1963,48	1876,31	2,11	2,01	2,54%	0,018
5	2012,86	1899,08	10,82	10,77	0,26%	0,009
6	2071,59	1949,07	5,34	5,32	0,18%	0,003
7	2105,72	1996,07	6,86	6,69	1,28%	0,029

2.7 GENERAL SUMMARY OF RESULTS

Run Number	Burn Rate (kg/hr)	Average Surface Temperature (F)	Change in surface Temperature (F)	Initial Draft (in. H^2O)	static pressure tunnel (in. H^2O)	Primary Air Setting	Run Time (min)
1	2,165	467,19	-60,2	0,015	0,20	maximum open	160
2	0,868	315,89	-63,0	0,010	0,20	Lowest setting	397
3	1,178	383,43	-76,2	0,012	0,18	medium low	295
4	1,592	429,07	-72,7	0,013	0,20	medium high	222
5	0,935	341,71	-84,7	0,000	0,18	Lowest setting	384
6	2,249	486,86	-65,2	0,015	0,18	maximum open	158
7	0,859	320,20	-93,4	0,011	0,18	Lowest setting	416

3 PROCESS DESCRIPTION

3.1 DISCUSSION

The unit was delivered by the client and received in a good condition. The 50hrs of aging was done by Service Polytests at medium heat draw (all data in Appendix 4). Four runs have been done for weighted average with the optional convection fan at "ON" position. One confirmation test was done without the optional convection fan, and two run have been done with the alternative catalyst.

3.2 UNIT DIMENSIONS

Baffle

- Location: between top of combustion chamber and hearth
- Restriction: 1.75-inch X 17.5-inch at the front of the unit
- Dimensions: cover the hearth area minus the restriction at the front
- Material: Gemcolite ½ inch thick.

Bricks

- Inside firebox refractory Soapstone 1¼ inch. thick cover all the right side, back and bottom, a second door without glass is located on the left side of the stove.

Flue gas exhaust

- Location: top flue
- Dimensions: 6 in. diameter
- Material: Cast Iron

Gasket

- Glass holder: miniglass
- Glass: 1/4 Round
- Door gasket against facing: fiberglass 3/8 round inch diameter
- Refer to appendix 6 for complete list and location of each gasket

Overall unit dimension

- Overall appliance dimensions: 27.5-inch-wide x 21.5-inch-deep x 30.25 inch high
- Usable and overall volume: 2.17 cuft

Convection fan

- Convection fan blower:
  - Free air: 150 CFM 110-120V (ref.: PT#90-57000)

Catalyst (appendix 6 for details):

- Applied Ceramics – P/N WF-415000106
- Cell density: 50 CPSI
- Material: 16 Ga SS430 or 304

Alternative Catalyst (appendix 6 for details):

- Applied Ceramics – P/N WF-4150001076
- Cell density: 50 CPSI
- Material: 16 Ga SS430 or 304

3.3 AIR SUPPLY SYSTEM

Description

- Primary air: Window wash design in cast iron channel gasketed on bottom, cemented on top and sides of the combustion chamber. Air intake on bottom of unit at front left corner (if facing door of stove)
- Secondary air: Secondary tube design with air intake at bottom center rear of unit, up through a steel riser tube to manifold and secondary air tubes.

Characterization

The following table shows the inlet and outlet sections of each system. The air introduction system number is referred to on a set of drawings in Appendix 6.

AIR INTRODUCTION SYSTEM		INLET (1) sq. in.			OUTLET
Identification	Type	Imin	Imax	Controlled	(sq. in.)
APPENDIX 14 SHARED and PA	Primary	Air control Slide 0.195	Air control Slide 2.415	yes	(Air wash) 3.366
APPENDIX 14 SHARED and SA	Secondary	(Riser Opening) 0.75	(Riser Opening) 0.75	No	(Secondary Tube holes) 1.397
Appendix 14 TA	LPAO	Controlled by the primary	Controlled by the primary	Yes	(Orifice) 0.196

* This section would be filled by measuring and comparing with the manufacturer's drawings included in the test report.

Legend

Identification: Tag name referred to on drawings in Appendix 14, section airflow pattern
Type: Characterization of air intake
Imin: Minimum air intake of a particular air channel
Imax: Maximum air intake of a particular air channel
Controlled: Determines if a provision for air control is present
Outlet: Total air outlet of a particular air channel

3.4 OPERATION DURING TEST

All runs have been found appropriate, no anomalies happened and all runs below have been validate and found compliant. Four runs (run 1 to 4) have been done for weighted average with the optional convection fan at "ON" position. One confirmation test was done without the optional convection fan (run5), and two run (run 6 & 7) have been done with the alternative catalyst.

Run #1

This run was performed on October 2nd 2023. It lasted 160 minutes and a 2.16 kg/hr burn rate was obtained & emission at 2,15 gr/hr. The optional convection fan Option was at on position during the entire test. The air inlet was at the maximum setting during the test. Category 4 burn rate been achieved.

Run #2

This run was performed on October 3rd 2023. It lasted 397 minutes and a 0.87 kg/hr burn rate was obtained & emission at 1,77 gr/hr. The optional convection fan Option was at on position during the entire test. The air inlet was at the minimum setting (lowest possible setting) during the test.

Run #3

This run was performed on October 4th 2023. It lasted 295 minutes and a 1,18 kg/hr burn rate was obtained & emission at 0,45 gr/hr. The optional convection fan Option was at on position during the entire test. The air inlet was at the medium low setting during the test. Category 2 burn rate been achieved.

Run #4

This run was performed on October 5th 2023. It lasted 222 minutes and a 1,59 kg/hr burn rate was obtained & emission at 0,56 gr/hr. The optional convection fan Option was at on position during the entire test. The air inlet was at the medium high setting during the test. Category 3 burn rate been achieved.

Run #5

This run was performed on October 10th 2023. It lasted 384 minutes and a 0,93 kg/hr burn rate was obtained & emission at 1,69 gr/hr. The optional convection fan Option was at OFF position during the entire test. The air inlet was at the lowest setting during the test. Category 2 burn rate been achieved. No fan confirmation test is cleaner than run1, lowest setting with FAN.

Run #6

This run was performed on October 18th 2023. It lasted 158 minutes and a 2.25 kg/hr burn rate was obtained & emission at 2,02 gr/hr. The optional convection fan Option was at on position during the entire test. The air inlet was at the maximum setting during the test. Category 4 burn rate been achieved with the alternative catalyst and comply within 0,5 g/hr from the original run1. This run at the maximum setting as for purpose to meet the catalyst equivalency (WDS-146 enclosed in appendix 15).

Run #7

This run was performed on October 19th 2023. It lasted 416 minutes and a 0.86 kg/hr burn rate was obtained & emission at 0,98 gr/hr. The optional convection fan Option was at on position during the entire test. The air inlet was at the minimum setting (lowest possible setting) during the test. Category 2 burn rate been achieved with the alternative catalyst and comply with a cleaner emission compared to the original run2. This run at the lowest possible setting as for purpose to meet the catalyst equivalency (WDS-146 enclosed in appendix 15).

- Details: Refer to the front page of each test run data sheets found in appendix for the detailed test sequence showing air supply settings and adjustments, fuel bed adjustments and operational specifics of the test unit.

Test fuel cribs

- Type of wood: Douglas fir, grade c or better, 19 to 25% dry basis moisture content
- Description: for each test, description of the fuel crib is found on the front page of each test run data sheet together with photograph in appendix.

3.5 START-UP OPERATION

The complete manufacturer's firing procedure of each burn rate category is fully described in appendix 13.

3.6 SAMPLING LOCATIONS

Particulate samples are collected from the dilution tunnel. The tunnel has two elbows ahead of the sampling section. The sampling section is a continuous 8-inch diameter pipe straight over its entire length. Tunnel velocity pressure is determined by a standard pitot tube, thermocouple is installed on the pitot tube to measure the dry bulb temperature. MC is assumed, as allowed, to be 2%. Tunnel samplers are located downstream of the pitot tube and upstream from the end of this section. All detail of dilution tunnel can be found in appendix 8.

3.7 DRAWINGS

Various drawings of the stack gas sampling train and of dilution tunnel system are found in Appendix 8.

3.8 EMISSIONS EFFICIENCY TESTING EQUIPMENT LIST

The complete test equipment list together with all corresponding calibration data can be found in Appendix 3.

4 SAMPLING METHODS

4.1 PARTICULATE SAMPLING

Particulates were sampled in strict accordance with ASTM E2515. This method uses two identical sampling systems with Gelman A/E 61631 binder free (or equivalent), 47 mm diameter filters. The dryers used in the sample systems are filled with "Drierite" before each test run.

5 QUALITY ASSURANCE

5.1 INSTRUMENT CALIBRATION

5.1.1 GAS METERS

At the conclusion of each test program the gas meters are verified using the reference dry gas meter. This process involves sampling the train operation for 1 cubic foot of volume. With readings made to .01 ft³, the resolution is 1 %, giving an accuracy higher than the 2% required by the standard.

5.1.2 SCALES

Before each test program, the different scales used are checked with traceable calibration weights to ensure their accuracy.

5.1.3 GAS ANALYZERS

The continuous analyzers are zeroed and spanned before each test with NBS traceable gases. A mid-scale multi-component calibration gas is then analyzed (values are recorded). At the conclusion of a test, the instruments are checked again with zero, span and calibration gases (values are recorded only). The drift in each meter is then calculated and must not exceed 5% of the scale used for the test.

5.2 TEST METHOD PROCEDURES

5.2.1 LEAK CHECK PROCEDURES

Before and after each test, each sample train is tested for leaks. Leakage rates are measured and must not exceed 0.02 CFM or 4% of the sampling rate. Leak checks are performed checking the entire sampling train. Pre-test and post-test leak checks are conducted with a vacuum of 5 inches of mercury. Vacuum is monitored during each test and the highest vacuum reached is then used for the post-test vacuum value. If leakage limits are not met, the test run is rejected. During these tests, the vacuum is typically less than 2 inches of mercury. Thus, leakage rates reported are expected to be much higher than actual leakage during the tests.

5.2.2 TUNNEL VELOCITY FLOW MEASUREMENT

The tunnel velocity is calculated from a center point pitot tube signal multiplied by an adjustment factor. This factor is determined by a traverse of the tunnel as prescribed in EPA Method 1. Final tunnel velocities and flow rates are calculated from EPA Method 2, Equation 6.9 and 6.10. (Tunnel cross sectional area is the average from both lines of traverse.)

Pitot tubes are cleaned before each test and leak checks are conducted after each test.

5.2.3 PM SAMPLING PROPORTIONALITY (ASTM E2515)

Proportionalities were calculated in accordance with ASTM E2515. The data and results are found in appendix.

APPENDIX 1: Raw data, forms and results

Paramètres

Tous les facteurs de corrections et autres paramètres qui peuvent être modifiés par l'utilisateur du fichier sont regroupés ici.

Code verrouillage:	HEA	

Description du test

Test standard	EPA	
Run #	1	
Date	02-10-2023	
Technicien	M.M	
Project #	PI 20294	

Description de l'unité

Manufacturer	HEARTHSTONE	
Modèle	8024	
Combustion system	Cat	
Appliance type	WOODSTOVE	
Firebox volume	2,17	cu ft.
Appliance weight empty	n.a	lbs
Appliance weight full	n.a	lbs

Paramètres du test

Logging time	1	min
Manufacturer's rated heat output	n.a	BTU/h Donnée fournie par le manfacturier
Targeted category		
Targeted output	n.a	BTU/h
Cp steel	n.a	BTU/lb-°F

Échantillonnage

Blank sampling rate	0,20	cuft/min
Internal probe diameter	0,18	in.
Calibration Factor (DGM #1):	0,994	
Equipment number (DGM #1):	EM 178	Dimensionless
Calibration Factor (DGM #2):	0,995	
Equipment number (DGM #2):	EM 318	Dimensionless
Calibration Factor (DGM #3):	0,998	
Equipment number (DGM #3):	EM179	Dimensionless
Calibration Factor (DGM 1st Hr):	0,998	
Equipment number (DGM 1st Hr):	EM 130	Dimensionless

Tunnel

Targeted tunnel flow rate	300	scfm
Tunnel diameter	8	in.
Molecular weight	29	29 as per ASTM E2515
Pitot tube type	Standard	
Pitot tube coefficient	0,99	Dimensionless

Project nu.	PI 20294
Date	02-10-2023
Technicien	M.M

Fuel data

Fuel type	Cord	
Fuel specie	D. Fir	
HHV	19810,0	kJ/kg
%C	48,7	
%H	6,9	
%O	43,9	
%Ash	0,5	
HHV	8519,2	Btu/lb
LHV	7451,0	Btu/lb

Default Fuel Values

	D. Fir	Oak/Maple
HHV	19 810	19 887
%C	48,73	50
%H	6,87	6,6
%O	43,9	42,9
%Ash	0,5	0,5
HHV (Btu/lb)	8519	8552
LHV (Btu/lb)	7451	7480

	Start	End
Barometer (kPa):	101,8	101,4
Barometer (in.Hg):	30,061529	29,943408873
Dry Bulb (F):	73	71,9
Humidity (%):	50,4	48,6
Air velocity (ft/min)	0	0

DGM #1st hour	Final:	2584,350	cuft	Final:	2584,350	cuft
	Initial:	2572,430	cuft	Initial:	2572,430	cuft
DGM #1	Final:	30172,755	cuft	Final:	854397,260	Liter
	Initial:	30144,332	cuft	Initial:	853592,420	Liter
DGM #2	Final:	21289,771	cuft	Final:	602859,160	Liter
	Initial:	21259,497	cuft	Initial:	602001,900	Liter
DGM room	Final:	16485,115	cuft	Final:	466806,460	Liter
	Initial:	16462,578	cuft	Initial:	466168,300	Liter

Numéro de la ligne dans "Raw data" à partir duquel les données du VRAI test commencent: 341

Autres données à rentrer: dans preload data, load data, traverse et filter set weight

Project nu.	PI 20294
Date	02-10-2023
Technicien	M.M

Preload data sheet

Test Load Weight:

Lower	Ideal	Upper
13,67	15,19	16,71

Load Volume: 0,4314 cu. ft

Loading Density: 7,466 lbs./ft3

Number of Spaces:

Spacer weight (lbs):

Load Density (wet): 37,555 lbs./ft3

Dry Wood Density: 31,319766

Piece Size (in): Thick	Wide	x Length	Weight lbs	Meter Moisture Content Dry Uncorrected %					Ave. MC x Weight	Volume Cubic Inches
1,5	3,5	17,5	1,96	20,4	20,3	20,2	20,4	20,6	39,9448	91,88
1,5	3,5	17,5	1,932	20	19,9	19,3	19,2	19,1	37,674	91,88
1,5	3,5	17,5	1,862	20	20,4	20	20	20,1	37,4262	91,88
1,5	3,5	17,5	2,138	19,6	19,3	19,4	19,2	19,3	41,39168	91,88
1,5	3,5	12	1,368	20	19,2	19,3	19,4	19,3	26,59392	63,00
1,5	3,5	12	1,412	21	21,1	21	21,9	21,3	30,01912	63,00
1,5	3,5	12	1,34	19,9	19,8	19,6	19,3	19,3	26,2372	63,00
1,5	3,5	12	1,372	20	20,1	20,3	20,4	20,3	27,74184	63,00
1,5	3,5	12	1,412	19,3	19,2	19,3	19,2	19,3	27,19512	63,00
1,5	3,5	12	1,406	20,1	20,3	20,2	20,1	20	28,31684	63,00
										0,00
										0,00
										0

FUEL LOAD DATA SHEET, CSA B415

Test Load Weight:

Lower	Ideal	Upper
13,7	15,2	16,7

* For boilers, a loading density factor of 10 lb/ft3 is applied

Load Volume: 0,41 cu. ft

Loading Density: 7,0 lbs./ft3

Number of Spaces: 16

Spacer weight: lbs

Load Density (wet): 33,7 lbs./ft3

Dry Wood Density: 28,1 lbs./ft3

Piece Size (in): Thick	Wide	Length	Weight lbs	Meter Moisture Content Dry Uncorrected %					Ave. MC x Weight	Volume Cubic Inches	Ave. MC %	
1,5	3,5	17,5	1,66	21,10	20,60	20,90	20,70	20,80	34,5612	91,88	20,8	
1,5	3,5	17,5	1,71	21,00	20,90	20,70	20,90	20,60	35,64384	91,88	20,8	
1,5	3,5	17,5	1,87	19,40	20,00	19,80	20,00	19,90	37,0634	91,88	19,8	
3,5	3,5	17,5	4,23	19,40	19,60	19,80	19,70	19,70	83,0772	214,38	19,6	Load
3,5	3,5	17,5	4,38	20,10	20,80	20,30	20,60	20,60	87,6544	214,38	20,5	
										0,00		
										0,00		
										0,00		
1,5	0,75	5	0,10			19,60			1,9992	5,63	19,6	
1,5	0,75	5	0,09			19,30			1,8142	5,63	19,3	
1,5	0,75	5	0,11			19,60			2,2344	5,63	19,6	
1,5	0,75	5	0,09			19,80			1,782	5,63	19,8	
1,5	0,75	5	0,08			19,30			1,5826	5,63	19,3	
1,5	0,75	5	0,10			19,90			2,0696	5,63	19,9	
1,5	0,75	5	0,10			20,00			1,92	5,63	20,0	
1,5	0,75	5	0,11			20,10			2,2914	5,63	20,1	
1,5	0,75	5	0,10			20,30			1,9488	5,63	20,3	
1,5	0,75	5	0,09			20,20			1,8584	5,63	20,2	
1,5	0,75	5	0,10			20,60			2,1012	5,63	20,6	
1,5	0,75	5	0,10			20,30			1,9488	5,63	20,3	
1,5	0,75	5	0,11			20,90			2,2572	5,63	20,9	
1,5	0,75	5	0,10			20,40			1,9992	5,63	20,4	
1,5	0,75	5	0,07			20,30			1,421	5,63	20,3	spacers
1,5	0,75	5	0,09			20,30			1,7864	5,63	20,3	
										0,00		
										0,00		
										0,00		
										0,00		
										0,00		
										0,00		
										0,00		
										0,00		
										0,00		
										0,00		
										0,00		
										0,00		
										0,00		
										0,00		
										0,00		
									SUM MCx 309,01444		20,1 %	

Test Load Weight: 15,30 lbs.

Dry Weight: 5,77 kg.

Average Moisture Content: %

Dry: 20,20 Dry(EPA) 20,20 Dry(B415 20,20

20,20 Must be 19-25

Wet: 16,81 must be 15,2-22

Coal Bed Range: 3,1 lbs. to 3,8 lbs.

TEST CHARGE:

Coal bed weight: 3,1 lbs.

Project nu.	PI 20294
Date	02-10-2023
Technicien	M.M

Tunnel Traverse Worksheet (for velocity calculations)

Static Pressure: 0,2 in. H20
Barometer: 29,900 in. Hg

Pour un tunnel de 12" et plus, prendre 6 lectures

	TUNNEL VELOCITY	TUNNEL TEMP	SQUARE ROOT
	In. wc	°F	
A center			0,0000
B center			0,0000
A1			0,0000
A2			0,0000
A3			0,0000
A4			0,0000
A5			0,0000
A6			0,0000
B1			0,0000
B2			0,0000
B3			0,0000
B4			0,0000
B5			0,0000
B6			0,0000
AVERAGE	#DIV/0!	#DIV/0!	0,0000

PITOT CONSTANT=
0,957

Pour un tunnel moins de 12", prendre 4 lectures

	TUNNEL VELOCITY	TUNNEL TEMP	SQUARE ROOT
	In. wc	°F	
A center	0,078	68,13	0,2793
B center	0,077	68,1	0,2775
A1	0,064	68,13	0,2530
A2	0,075	68,11	0,2739
A3	0,076	68,11	0,2757
A4	0,065	68,22	0,2550
B1	0,064	68,1	0,2530
B2	0,073	68,2	0,2702
B3	0,075	68,2	0,2739
B4	0,064	68,1	0,2530
AVERAGE	0,0711	68,1420	0,2664

Project nu.	PI 20294
Date	02-10-2023
Technicien	M.M

Filter set weight

	System 1 (g) 1st hour			System 1 (g)			System 2 (g)			Ambient blank (g)	Date	Heure	Test end date & time
	probe	front/ Back	gasket	probe	front/ Back	gasket	probe	front/ Back	gasket	Filter			
Number	016	01-02	06	017	03-04	29	32	05-06	38	07			
Before (1)													
Before (2)													
Before (3)													
Before (4)													
Before (5)	108,7516	0,2440	35,6813	108,9413	0,2442	34,3109	110,1778	0,2430	34,7112	0,1218	2023-09-29	17:00	
Before (6)	108,7511	0,2439	35,6814	108,9413	0,2443	34,3108	110,1778	0,2431	34,7113	0,1217	2023-10-02	09:00	
After (1)	108,7512	0,2461	35,6836	108,9415	0,2462	34,3140	110,1779	0,2451	34,7146	0,1218	2023-10-02	18:00	
After (2)	108,7512	0,2458	35,6824	108,9414	0,2461	34,3118	110,1779	0,2451	34,7123	0,1218	2023-10-10	08:00	
After (3)	108,7512	0,2458	35,6824	108,9414	0,2461	34,3118	110,1779	0,2451	34,7123	0,1218	2023-10-11	08:00	
After (4)													2023-10-02 17:15
After (5)													
After (6)	108,7512	0,2458	35,6824	108,9414	0,2461	34,3118	110,1779	0,2451	34,7123	0,1218	2023-10-11	08:00	
Difference	0,0001	0,0019	0,0010	0,0001	0,0018	0,0010	0,0001	0,0020	0,0010	0,0001			
Total (mg)		3			2,9			3,1		0,1			
Total ajusté (mg)		**2,90**			**2,80**			**3,00**					

Project nu.	PI 20294
Date	02-10-2023
Technicien	M.M

Manufacturer: HEARTHSTONE
Model: 8024

Run: 1
Project #: PI 20294
Test Duration: 160 min

	HHV	LHV
Eff	71,73%	77,53%
Comb Eff	93,89%	93,89%
HT Eff	76,40%	82,58%
Output	30 773	kJ/h
Burn Rate	2,17	kg/h
Grams CO	486	g
Input	42 898	kJ/h
MC wet	16,91	

Note: In the "Input data", "Calc. % O_2", "Fuel Properties", and "Mass Balance" columns, [a], [c], [g], [k], [b], [c], [h], [u], [w], [j], and [k] refer to their respective variables in Clauses

Ultimate CO_2
CO_{2ult} 19,64
F_0
1,063

Overall Heating Efficiency: 71,73%
Combustion Efficiency: 93,89%
Heat Transfer Efficiency: 76,40%

Heat Output: 29 191 Btu/h
Heat Input: 40 693 Btu/h

Burn Duration: 2,67 h

Burn Rate: 4,77 lb/h

Stack Temp: 462,4 Deg. F

	Averages	0,88	11,23	0,85	20,17	8,85	239,40	24,30	0,97	0,76	#DIV/0!
INPUT DATA				Oxygen Calculation			Input Data		Combust	Heat	Net
Elapsed Time	Weight Remaining (kg)	% CO [a]	% CO_2 [c]	Excess Air EA	Total O_2	Calc. % O_2 [g]	Flue Gas (°C)	Room Temp (°C)	Eff %	Transfer %	Eff %
0,00	6,94	0,12	2,77	583,2%	20,75	17,43	206,7	23,2	98,4%	48,7%	47,9%
1,00	6,84	0,07	5,61	233,9%	20,55	14,70	209,6	23,4	99,7%	88,6%	88,4%
2,00	6,75	0,04	10,22	91,3%	20,28	10,23	221,7	23,0	100,0%	76,1%	76,0%
3,00	6,65	0,17	14,07	38,2%	20,03	5,85	235,1	23,1	99,1%	78,5%	77,8%
4,00	6,57	0,33	15,35	23,2%	19,90	4,38	245,2	23,2	98,3%	78,7%	77,3%
5,00	6,48	0,25	15,11	27,9%	19,93	4,69	250,5	23,1	98,7%	78,3%	77,3%
6,00	6,34	0,89	15,67	18,6%	19,85	3,73	256,8	23,3	95,3%	78,1%	74,6%
7,00	6,25	1,42	15,95	13,0%	19,79	3,13	262,0	23,4	93,2%	77,9%	72,6%
8,00	6,13	2,49	15,92	6,7%	19,72	2,58	266,8	23,5	88,9%	77,3%	68,7%
9,00	6,05	2,43	16,06	6,2%	19,72	2,44	269,5	23,6	89,1%	77,3%	68,9%
10,00	5,93	1,65	16,33	9,2%	19,75	2,60	271,8	23,7	92,2%	77,6%	71,6%
11,00	5,84	1,60	16,35	9,3%	19,75	2,59	274,0	23,5	92,5%	77,5%	71,7%
12,00	5,71	1,76	16,36	8,4%	19,74	2,50	275,5	23,6	91,9%	77,3%	71,1%
13,00	5,62	2,08	16,35	6,5%	19,72	2,32	277,4	23,4	90,6%	77,2%	69,9%
14,00	5,49	1,48	16,49	9,4%	19,75	2,53	278,7	23,4	93,2%	77,4%	72,1%
15,00	5,39	1,19	16,56	10,7%	19,77	2,61	278,8	23,7	94,4%	77,5%	73,1%
16,00	5,30	1,47	16,46	9,5%	19,76	2,56	279,3	23,4	93,1%	77,3%	72,0%
17,00	5,21	1,75	16,41	8,2%	19,74	2,46	280,2	23,6	92,0%	77,2%	71,0%
18,00	5,07	2,09	16,31	6,8%	19,73	2,37	280,7	23,7	90,5%	77,0%	69,7%
19,00	4,94	2,75	16,18	3,8%	19,69	2,14	281,5	23,8	87,9%	76,7%	67,5%
20,00	4,86	3,10	16,13	2,2%	19,67	1,99	281,9	24,0	86,6%	76,6%	66,4%
21,00	4,75	3,43	16,05	0,8%	19,65	1,88	281,6	24,0	85,4%	76,5%	65,3%
22,00	4,62	3,56	15,99	0,5%	19,65	1,88	280,8	23,8	84,9%	76,4%	64,9%
23,00	4,53	3,58	15,98	0,4%	19,65	1,88	281,1	23,9	84,9%	76,4%	64,9%
24,00	4,43	3,71	15,93	0,0%	19,64	1,85	280,3	23,8	84,4%	76,4%	64,5%
25,00	4,30	3,79	15,92	-0,3%	19,64	1,83	279,0	24,1	84,1%	76,4%	64,3%
26,00	4,19	3,85	15,89	-0,5%	19,64	1,82	278,5	24,0	83,9%	76,4%	64,1%
27,00	4,12	3,83	15,87	-0,3%	19,64	1,85	277,6	24,0	83,9%	76,5%	64,2%
28,00	3,98	3,75	15,88	0,1%	19,64	1,88	277,1	24,2	84,2%	76,5%	64,5%
29,00	3,89	3,70	15,92	0,1%	19,64	1,88	276,8	24,2	84,4%	76,6%	64,6%
30,00	3,80	3,38	15,96	1,9%	19,66	2,01	276,5	24,3	85,5%	76,7%	65,6%
31,00	3,66	3,12	16,05	2,3%	19,67	2,07	276,8	24,3	86,3%	76,8%	66,4%
32,00	3,57	3,03	16,10	2,7%	19,68	2,06	276,4	24,4	86,9%	76,9%	66,8%
33,00	3,48	2,96	16,10	3,0%	19,68	2,10	276,7	24,2	87,1%	76,9%	67,0%
34,00	3,39	2,85	16,13	3,3%	19,69	2,13	276,2	24,3	87,5%	77,0%	67,4%
35,00	3,30	2,61	16,20	4,4%	19,70	2,18	275,1	24,0	88,5%	77,1%	68,2%
36,00	3,21	2,38	16,21	5,8%	19,71	2,31	275,1	24,3	89,3%	77,2%	68,9%
37,00	3,12	2,22	16,23	6,8%	19,72	2,38	275,1	24,1	90,0%	77,2%	69,5%
38,00	3,03	2,03	16,24	7,5%	19,73	2,48	274,3	24,4	90,7%	77,3%	70,2%
39,00	2,95	1,85	16,27	8,4%	19,74	2,55	274,0	24,2	91,3%	77,4%	70,6%
40,00	2,89	1,76	16,24	9,2%	19,75	2,64	273,5	24,6	91,8%	77,4%	71,1%
41,00	2,80	1,71	16,22	9,6%	19,76	2,68	273,1	24,0	92,0%	77,4%	71,3%
42,00	2,71	1,70	16,22	9,6%	19,76	2,69	272,6	24,5	92,1%	77,5%	71,4%
43,00	2,62	1,63	16,21	10,2%	19,76	2,73	272,0	24,5	92,4%	77,5%	71,6%
44,00	2,57	1,32	16,22	12,0%	19,78	2,90	271,3	24,5	93,7%	77,7%	72,8%
45,00	2,48	1,04	16,21	13,8%	19,80	3,07	270,3	24,4	95,0%	77,8%	73,9%
46,00	2,39	0,77	16,16	16,1%	19,82	3,28	268,7	24,6	96,2%	77,8%	74,9%
47,00	2,35	0,62	16,05	17,9%	19,84	3,48	269,1	24,3	96,9%	77,9%	75,5%
48,00	2,30	0,53	15,92	19,4%	19,85	3,67	267,9	24,4	97,3%	77,9%	75,8%
49,00	2,21	0,34	15,70	22,4%	19,88	4,00	266,9	23,9	98,3%	77,9%	76,5%
50,00	2,17	0,26	15,52	24,0%	19,90	4,20	265,8	24,1	98,7%	77,9%	76,9%
51,00	2,12	0,18	15,39	25,2%	19,91	4,43	264,3	24,4	99,1%	77,9%	77,2%
52,00	2,03	0,11	15,19	28,3%	19,93	4,60	262,7	24,2	99,5%	77,8%	77,4%
53,00	1,98	0,08	14,95	30,8%	19,95	4,96	261,0	24,0	99,7%	77,8%	77,5%
54,00	1,94	0,05	14,62	33,9%	19,97	5,33	259,5	24,4	99,8%	77,6%	77,5%
55,00	1,89	0,05	14,26	37,3%	20,00	5,71	257,4	24,6	99,8%	77,5%	77,4%
56,00	1,85	0,04	13,92	40,7%	20,02	6,08	255,6	24,4	99,9%	77,4%	77,3%
57,00	1,80	0,03	13,71	42,9%	20,03	6,31	253,4	24,2	99,9%	77,3%	77,3%
58,00	1,76	0,03	13,51	45,1%	20,05	6,52	251,7	24,1	100,0%	77,3%	77,2%
59,00	1,71	0,03	13,33	47,1%	20,06	6,71	249,8	24,7	100,0%	77,3%	77,3%
60,00	1,67	0,02	13,20	48,8%	20,07	6,85	247,9	24,3	100,0%	77,3%	77,3%
61,00	1,62	0,02	12,85	51,3%	20,08	7,13	246,4	24,4	100,0%	77,2%	77,2%
62,00	1,58	0,02	10,82	81,2%	20,22	9,39	244,0	24,4	100,1%	75,3%	75,4%
63,00	1,58	0,02	10,61	84,8%	20,24	9,62	241,8	24,4	100,1%	75,2%	75,3%
64,00	1,53	0,02	10,36	89,3%	20,25	9,89	239,6	24,6	100,1%	75,1%	75,2%
65,00	1,49	0,02	10,23	91,6%	20,26	10,03	237,5	24,3	100,1%	75,0%	75,1%
66,00	1,47	0,02	10,12	93,8%	20,27	10,14	235,8	24,1	100,1%	75,0%	75,1%
67,00	1,44	0,02	10,12	93,8%	20,27	10,14	233,5	24,3	100,1%	75,2%	75,3%
68,00	1,39	0,02	10,13	93,5%	20,27	10,13	232,5	24,0	100,2%	75,3%	75,4%
69,00	1,35	0,02	10,21	92,0%	20,26	10,04	231,6	24,3	100,1%	75,4%	75,5%
70,00	1,31	0,02	10,36	89,2%	20,25	9,88	229,8	24,1	100,1%	75,7%	75,8%
71,00	1,30	0,02	10,64	84,3%	20,24	9,58	228,5	24,6	100,1%	76,1%	76,2%
72,00	1,30	0,02	10,93	79,3%	20,22	9,28	229,4	24,3	100,1%	76,4%	76,5%
73,00	1,21	0,01	11,10	75,9%	20,20	9,03	228,5	24,2	100,1%	76,6%	76,7%
74,00	1,21	0,01	11,26	77,4%	20,21	9,14	228,2	24,4	100,1%	76,6%	76,7%
75,00	1,17	0,01	10,87	80,8%	20,22	9,34	227,2	24,6	100,2%	76,5%	76,6%
76,00	1,16	0,01	10,88	83,7%	20,23	9,55	225,7	24,6	100,2%	76,4%	76,5%
77,00	1,12	0,01	10,56	85,8%	20,24	9,68	224,4	24,6	100,2%	76,4%	76,5%
78,00	1,12	0,02	10,33	89,8%	20,26	9,92	223,7	24,6	100,1%	76,2%	76,3%
79,00	1,08	0,02	10,20	90,7%	20,26	9,97	222,5	24,3	100,1%	76,2%	76,3%
80,00	1,08	0,02	10,20	90,8%	20,26	9,98	221,3	24,1	100,1%	76,2%	76,3%
81,00	1,03	0,02	10,42	88,2%	20,25	9,83	220,4	24,4	100,2%	76,5%	76,6%
82,00	1,03	0,02	10,53	86,3%	20,24	9,71	219,5	24,4	100,1%	76,6%	76,7%
83,00	0,99	0,02	10,13	93,4%	20,27	10,12	218,5	24,4	100,1%	76,3%	76,4%
84,00	0,99	0,02	9,73	100,9%	20,29	10,53	217,2	24,5	100,1%	75,9%	76,0%
85,00	0,94	0,03	9,53	105,3%	20,31	10,76	216,9	24,7	100,1%	75,7%	75,8%
86,00	0,94	0,03	9,39	108,6%	20,32	10,91	216,0	24,5	100,1%	75,6%	75,6%
87,00	0,94	0,03	9,23	112,1%	20,33	11,09	215,3	24,5	100,0%	75,4%	75,4%
88,00	0,90	0,03	8,79	122,8%	20,35	11,55	214,1	24,5	100,1%	74,9%	74,9%
89,00	0,90	0,04	8,54	129,0%	20,37	11,82	212,9	24,5	100,1%	74,6%	74,6%
90,00	0,90	0,04	8,52	129,6%	20,37	11,84	211,7	24,4	100,0%	74,7%	74,7%
91,00	0,85	0,04	8,52	129,5%	20,37	11,83	210,4	24,4	100,0%	74,8%	74,8%
92,00	0,85	0,04	8,54	129,1%	20,37	11,82	209,6	24,6	100,0%	74,9%	74,9%

93,00	0,81	0,04	8,54	129,0%	20,37	11,81	208,0	24,4	100,0%	35,0%	70,0%
94,00	0,81	0,04	8,52	129,5%	20,37	11,84	207,6	24,4	100,0%	35,0%	70,0%
95,00	0,81	0,04	8,54	129,0%	20,37	11,81	208,0	24,7	100,0%	35,1%	70,1%
96,00	0,81	0,04	8,50	127,9%	20,37	11,77	208,1	24,7	100,0%	35,2%	70,2%
97,00	0,76	0,04	8,54	128,9%	20,37	11,81	208,2	24,8	100,0%	35,2%	70,2%
98,00	0,76	0,04	8,53	128,5%	20,37	11,80	208,5	24,7	100,0%	35,3%	70,3%
99,00	0,76	0,04	8,53	128,5%	20,37	11,80	208,6	24,7	100,0%	35,4%	70,4%
100,00	0,71	0,04	8,51	128,0%	20,37	11,84	208,6	24,7	100,0%	35,3%	70,3%
101,00	0,71	0,05	8,49	130,2%	20,38	11,87	208,2	24,7	100,0%	35,3%	70,3%
102,00	0,71	0,05	8,46	131,1%	20,38	11,90	208,1	24,8	99,9%	35,3%	70,3%
103,00	0,71	0,05	8,47	130,1%	20,39	11,89	208,4	24,8	100,0%	35,1%	70,2%
104,00	0,67	0,05	8,43	140,3%	20,40	12,25	208,3	24,4	100,0%	34,9%	69,9%
105,00	0,67	0,05	8,00	141,8%	20,40	12,30	208,3	24,7	100,0%	34,9%	69,8%
106,00	0,62	0,05	8,13	140,3%	20,40	12,25	208,4	24,4	100,0%	35,0%	70,0%
107,00	0,62	0,05	8,13	140,3%	20,40	12,25	208,2	24,8	99,9%	35,0%	70,0%
108,00	0,62	0,05	8,11	140,8%	20,40	12,27	208,0	24,8	99,9%	35,0%	70,0%
109,00	0,62	0,05	8,14	139,7%	20,40	12,23	208,5	24,8	99,9%	35,1%	70,1%
110,00	0,58	0,05	8,18	138,6%	20,40	12,20	208,5	24,8	99,9%	35,2%	70,1%
111,00	0,58	0,05	8,13	140,2%	20,40	12,25	208,4	24,3	99,9%	35,1%	70,0%
112,00	0,53	0,05	8,09	141,6%	20,40	12,30	208,8	24,7	99,9%	35,1%	70,0%
113,00	0,53	0,05	8,08	142,0%	20,40	12,31	208,9	24,8	99,9%	35,1%	70,0%
114,00	0,53	0,05	8,08	141,6%	20,40	12,30	208,3	24,8	99,9%	35,1%	70,0%
115,00	0,53	0,05	7,96	144,5%	20,41	12,40	207,4	24,8	99,9%	35,0%	70,0%
116,00	0,53	0,05	7,91	145,8%	20,41	12,46	207,1	24,8	99,9%	34,9%	69,9%
117,00	0,53	0,05	7,90	147,0%	20,42	12,51	206,8	24,8	99,9%	34,9%	69,9%
118,00	0,49	0,05	7,88	147,5%	20,42	12,51	206,5	24,8	99,9%	34,9%	69,9%
119,00	0,49	0,05	7,90	146,1%	20,42	12,53	206,2	24,7	99,9%	35,0%	69,9%
120,00	0,49	0,05	7,88	147,5%	20,42	12,51	206,8	24,5	99,9%	35,0%	69,9%
121,00	0,48	0,05	7,90	146,9%	20,42	12,56	205,4	24,8	99,9%	35,0%	69,9%
122,00	0,44	0,05	7,90	152,1%	20,42	12,60	204,9	24,8	99,9%	35,0%	69,9%
123,00	0,44	0,05	7,92	149,5%	20,42	12,57	204,8	24,7	99,9%	35,0%	69,9%
124,00	0,40	0,05	7,91	149,9%	20,42	12,58	204,8	24,8	99,9%	35,0%	69,9%
125,00	0,40	0,06	7,76	150,6%	20,42	12,61	204,4	24,8	99,9%	35,0%	69,9%
126,00	0,40	0,06	7,87	147,9%	20,43	12,52	203,9	24,7	99,9%	35,2%	70,1%
127,00	0,35	0,06	7,88	147,5%	20,42	12,51	203,8	24,7	99,9%	35,2%	70,1%
128,00	0,35	0,06	7,76	150,6%	20,42	12,61	203,4	24,8	99,9%	35,1%	70,0%
129,00	0,35	0,06	7,73	152,2%	20,43	12,66	203,3	24,8	99,9%	35,0%	69,9%
130,00	0,35	0,06	7,72	152,7%	20,43	12,68	203,1	25,0	99,9%	35,0%	69,9%
131,00	0,35	0,06	7,70	153,2%	20,43	12,70	203,3	24,9	99,9%	35,0%	69,9%
132,00	0,30	0,06	7,74	152,0%	20,43	12,66	203,0	25,0	99,9%	35,1%	70,0%
133,00	0,30	0,06	7,71	152,7%	20,43	12,67	202,4	24,7	99,9%	35,1%	70,0%
134,00	0,30	0,06	7,69	153,2%	20,44	12,68	202,3	24,9	99,9%	34,9%	69,7%
135,00	0,30	0,06	7,67	153,9%	20,44	12,94	201,9	24,8	99,9%	34,7%	69,6%
136,00	0,26	0,06	7,77	154,4%	20,45	13,05	202,0	24,8	99,9%	34,8%	69,6%
137,00	0,30	0,06	7,56	154,9%	20,45	13,05	201,6	24,8	99,9%	34,8%	69,6%
138,00	0,26	0,06	7,54	155,4%	20,45	13,08	201,4	24,5	99,9%	34,8%	69,7%
139,00	0,22	0,06	7,59	157,1%	20,45	13,13	201,4	24,7	99,9%	34,8%	69,7%
140,00	0,22	0,06	7,56	158,3%	20,46	13,17	201,3	24,7	99,9%	34,9%	69,7%
141,00	0,22	0,06	7,53	159,0%	20,46	13,20	201,2	24,8	99,9%	34,9%	69,7%
142,00	0,21	0,06	7,58	171,5%	20,46	13,26	201,3	24,8	99,9%	34,9%	69,7%
143,00	0,17	0,06	7,56	171,6%	20,46	13,26	200,3	24,8	99,9%	34,8%	69,7%
144,00	0,17	0,06	7,56	171,6%	20,46	13,26	200,1	24,5	99,9%	34,8%	69,7%
145,00	0,17	0,06	7,56	172,2%	20,46	13,28	200,2	24,8	99,9%	34,8%	69,7%
146,00	0,13	0,06	7,54	172,9%	20,46	13,29	200,5	24,8	99,9%	34,8%	69,7%
147,00	0,17	0,06	7,51	174,1%	20,47	13,33	200,3	24,7	99,9%	34,9%	69,7%
148,00	0,13	0,06	7,53	176,5%	20,47	13,40	200,2	24,8	99,9%	34,9%	69,7%
149,00	0,13	0,06	7,53	177,2%	20,47	13,42	197,9	24,8	99,9%	34,9%	69,7%
150,00	0,13	0,06	7,53	177,1%	20,47	13,41	198,1	24,7	99,9%	34,9%	69,7%
151,00	0,13	0,06	7,50	178,4%	20,47	13,45	198,3	24,8	99,9%	34,9%	69,7%
152,00	0,09	0,06	8,00	160,4%	20,48	13,50	198,0	24,3	99,9%	34,0%	69,9%
153,00	0,09	0,06	8,07	163,0%	20,48	13,59	198,0	24,5	99,9%	33,9%	69,7%
154,00	0,09	0,06	8,07	163,5%	20,48	13,59	198,2	24,8	99,9%	33,9%	69,7%
155,00	0,03	0,07	8,72	189,5%	20,49	13,74	198,6	24,4	99,9%	33,9%	69,7%
156,00	0,03	0,07	8,64	193,0%	20,50	13,83	198,7	24,7	99,7%	33,9%	69,7%
157,00	0,03	0,07	8,07	195,9%	20,50	13,90	198,7	24,7	99,7%	33,2%	69,0%
158,00	0,03	0,07	8,04	197,3%	20,50	13,93	198,9	24,4	99,7%	33,0%	#DIV/0!
159,00	0,03	0,07	8,46	201,2%	20,51	14,02	198,7	24,7	99,7%	32,9%	72,7%
160,00	0,00	0,07	8,39	204,2%	20,51	14,09	198,6	24,8	99,7%	32,7%	72,6%

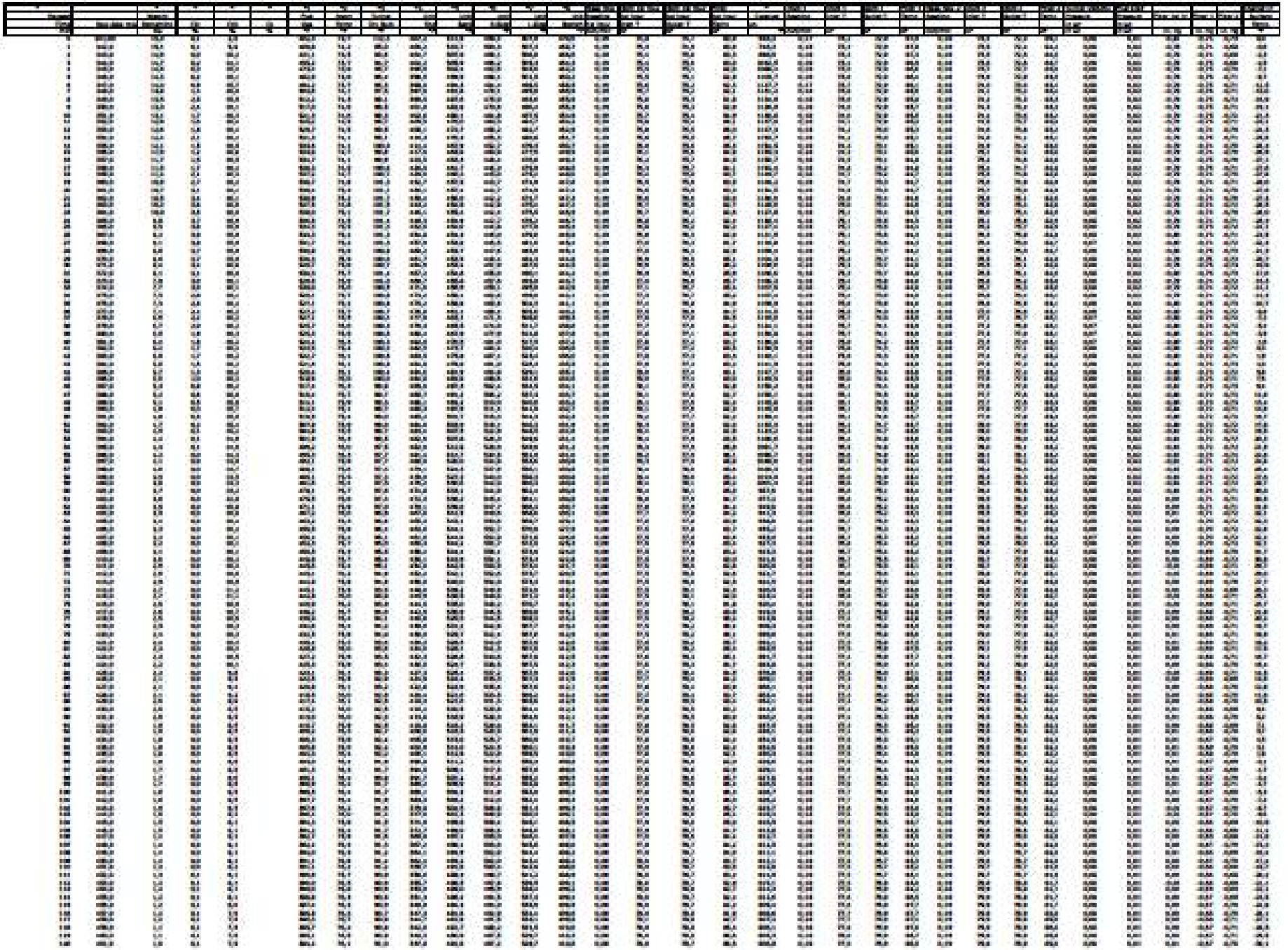

[redacted]

SFBA EPA EMISSION RESULTS

Test Duration: **160** min

PRESSURE FACTOR:	DGM 1st hr	0,976	
	DGM 1	0,980	
	DGM 2	0,979	
	DGM 3	1,003	
TEMPERATURE FACTORS	DGM 1st hr	0,984	
	DGM 1	0,985	
	DGM 2	0,981	
	DGM 3	0,985	
VOLUMES SAMPLED	DGM 1st hr	11,418	SCft
	DGM 1	27,243	SCft
	DGM 2	28,935	SCft
	DGM 3	22,227	SCft

TOTAL TUNNEL VOLUME : 56174

SAMPLE RATIOS

Sample Train 1st Hr:	1844,8
Sample Train 1:	2062,0
Sample Train 2:	1941,4

Paticulate concentration

Sample Train 1st Hr	**0,000263**	g/dscf
Sample Train 1	**0,000106**	g/dscf
Sample Train 2	**0,000107**	g/dscf
Room	**0,000004**	g/dscf

TOTAL EMISSIONS

Sample Train 1st Hr	**5,44**	g
Sample Train 1	**5,73**	g
Sample Train 2	**5,77**	g

EMISSION RATES

Sample Train 1st Hr	**5,44**	g/hr
Sample Train 1	**2,15**	g/hr
Sample Train 2	**2,16**	g/hr

	Train 1	Train 2	Train 1st Hr
Cs	0,0001065	0,00010714	0,0002627

RESULTS

Average emission rate: 2,15 g/hr

Burn Rate : 2,16 Dry kg/hr

BAROMETRIC PRESSURE

Average:	30,00246871 In Hg
Start:	30,06152868 In Hg
End:	29,94340873 In Hg

DGM VALUES

DGM 1st hr Final:	2584,350	Cuft
Initial:	2572,430	Cuft
DGM 1 Final:	30172,755	Cuft
Initial:	30144,332	Cuft
DGM 2 Final:	21289,771	Cuft
Initial:	21259,497	Cuft
DGM #3 Final:	16485,115	Cuft
Initial:	16462,578	Cuft

TEMPERATURES

DGM 1st hr	536,820	°R
DGM 1	536,118	°R
DGM 2	537,999	°R

CALIBRATION FACTORS

DGM 1st hr	0,9978
DGM 1	0,9936
DGM 2	0,9946
DGM #3	0,9982

TUNNEL FLOW RATE: 351,1 Dscfm

PARTICULATE CATCH

Total Sample Train 1:	2,90	mg
Total Sample Train 2:	3,10	mg
Total Sample Train 1 1st hour:	3,00	mg

DEVIATION: 0,34%

Raw Data
preburn / preload

Time	Flue	Room	Tunnel	Catalyst up	scale	Right	Back	bottom	Top	Left
acquisition	temp	temp	dry bulb							
minutes	°F	°F	°F	°F	lbs	°F	°F	°F	°F	°F
1	87,55	67,27	86,96	87,27	0,19	88,04	87,96	87,88	88,88	88,10
2	77,77	67,27	89,36	73,89	5,07	88,04	88,00	87,81	88,89	88,12
3	136,23	67,23	77,03	115,36	4,97	88,03	88,03	88,87	88,70	88,10
4	343,71	67,19	90,72	310,77	4,77	88,19	88,17	75,53	88,84	88,17
5	277,46	67,10	77,94	244,18	4,57	88,96	88,57	85,72	89,20	88,46
6	388,15	67,23	75,74	366,03	4,57	70,76	89,20	94,21	89,91	89,22
7	300,03	67,32	77,25	278,10	4,47	73,44	70,19	100,66	70,93	70,33
8	316,53	67,26	77,76	295,09	4,37	76,52	71,31	106,15	72,37	71,76
9	310,76	67,00	78,05	293,66	4,37	79,75	72,55	111,59	74,34	73,39
10	329,84	67,14	79,20	284,55	4,27	83,03	73,89	116,42	76,02	74,88
11	351,43	67,37	80,79	288,87	4,17	86,17	75,36	121,26	78,05	76,48
12	368,77	67,45	83,23	305,19	4,07	89,34	76,92	126,42	82,82	78,10
13	434,58	67,62	86,09	348,03	3,94	92,46	78,59	134,69	86,45	79,88
14	461,50	67,73	87,69	384,12	3,77	95,53	80,35	147,35	90,55	81,83
15	479,89	67,82	89,15	414,14	3,67	98,71	82,29	160,40	95,42	84,17
16	501,26	67,94	91,26	445,57	3,57	102,21	84,39	170,68	100,87	86,85
17	532,47	68,01	93,80	484,87	3,37	105,98	86,83	180,18	106,93	89,79
18	542,39	68,02	94,95	505,05	3,27	110,09	89,13	189,70	113,70	93,03
19	580,18	68,14	99,04	535,14	3,07	114,58	91,83	196,41	121,08	96,59
20	596,82	68,22	101,10	568,44	2,87	119,55	94,85	210,41	129,11	100,46
21	631,96	68,39	103,43	605,85	2,67	124,86	98,31	232,97	137,75	104,76
22	650,89	68,54	105,85	626,68	2,54	130,74	102,15	256,26	146,95	109,47
23	656,71	68,40	107,12	646,67	2,37	137,22	106,53	249,08	156,98	114,77
24	666,90	68,53	107,78	660,49	2,17	144,02	111,49	263,43	167,39	121,07
25	661,94	68,65	107,55	660,29	1,97	151,25	117,05	277,66	178,00	128,71
26	657,32	68,62	106,37	675,31	1,77	159,09	123,32	291,36	188,59	137,43
27	644,95	68,66	107,08	660,29	1,67	166,78	130,50	303,64	199,44	147,06
28	645,87	68,65	107,52	661,13	1,47	175,10	138,18	314,27	209,97	157,82
29	644,38	68,76	107,48	659,40	1,37	183,83	146,30	324,28	220,31	168,77
30	661,75	69,03	109,55	672,35	1,81	192,83	154,82	331,59	230,18	180,29
31	467,57	69,20	104,08	532,11	17,28	202,76	164,16	337,36	239,84	191,69
32	402,11	69,00	104,03	359,16	17,18	211,91	173,57	331,90	248,45	202,52
33	398,37	69,11	106,30	411,10	17,15	218,89	180,27	323,73	249,79	212,35
34	375,03	68,79	102,79	395,45	17,08	225,15	186,71	315,24	251,63	221,24
35	378,43	68,72	101,89	431,16	16,98	229,89	192,48	307,48	253,31	229,50
36	352,31	68,55	98,66	458,48	16,88	232,50	197,59	300,78	254,47	234,27
37	327,40	68,56	95,83	430,28	16,82	235,13	201,35	294,71	254,02	238,59
38	329,58	68,52	92,90	388,36	16,78	236,96	204,57	289,06	253,33	242,00
39	328,70	68,66	94,03	375,37	16,78	238,22	206,85	283,90	251,97	244,51
40	331,38	68,63	94,19	368,68	16,68	239,62	208,72	279,36	250,49	246,93
41	334,18	68,67	94,07	366,11	16,58	239,21	210,21	275,41	248,84	248,63
42	314,97	68,66	97,31	323,51	16,58	237,78	212,09	271,95	245,92	247,07
43	286,72	69,03	97,69	302,45	16,48	236,80	213,67	268,99	243,36	247,07
44	296,62	68,91	96,65	348,43	16,38	235,94	215,36	266,43	240,51	246,66
45	294,67	68,67	96,41	330,94	16,28	234,61	216,41	264,48	237,80	246,51
46	317,75	68,69	100,79	342,12	16,08	233,69	218,14	263,53	234,97	246,49
47	337,26	68,72	102,84	353,68	15,98	232,84	219,64	264,20	231,95	246,56
48	302,94	68,68	94,79	367,50	15,88	232,49	221,75	266,50	229,01	246,61
49	282,16	68,60	92,23	372,18	15,88	232,66	223,69	269,08	226,06	247,14
50	282,39	68,67	90,63	357,91	15,78	232,01	223,61	270,91	222,98	247,15
51	246,48	68,63	79,62	346,17	15,78	232,25	224,98	271,04	219,54	246,52
52	236,53	68,79	78,62	336,41	15,68	232,00	225,08	271,99	216,28	246,12
53	230,00	68,79	77,96	327,47	15,71	231,88	224,58	271,66	212,94	245,60
54	222,70	68,74	77,65	319,07	15,68	231,22	224,01	270,98	210,28	245,74
55	218,62	68,77	77,29	309,66	15,68	230,42	223,70	270,11	208,01	245,12
56	210,89	68,77	76,49	303,79	15,68	229,54	223,32	269,11	204,61	244,84
57	202,76	68,96	80,65	240,01	17,28	228,14	221,43	268,00	201,45	244,44
58	196,62	68,94	80,53	199,09	15,58	226,84	220,70	267,00	198,75	244,04
59	205,04	68,97	79,43	208,47	15,58	225,11	219,58	266,17	196,61	243,29
60	211,46	69,11	77,92	223,94	15,48	223,30	218,42	265,58	194,04	242,13
61	218,85	69,12	77,49	241,58	15,48	221,47	216,84	265,04	190,68	240,89
62	219,47	69,13	77,47	247,79	15,38	219,75	215,33	264,63	187,87	239,64
63	230,38	69,16	77,80	254,83	15,37	218,06	213,91	264,40	185,40	238,93
64	251,84	69,11	78,54	264,83	15,28	216,28	212,55	264,34	182,74	238,55
65	261,72	68,97	78,93	273,13	15,18	214,74	211,22	264,49	180,85	238,40
66	265,51	69,04	79,03	278,30	15,08	213,42	209,96	264,85	178,34	238,66
67	267,01	69,13	78,97	282,30	15,08	211,41	209,41	265,40	176,60	239,26
68	260,28	69,15	78,48	282,68	14,98	209,68	208,73	266,25	174,50	239,91
69	244,96	69,06	78,03	281,31	14,98	208,68	208,07	267,30	172,52	240,70
70	236,37	69,02	77,49	280,21	14,88	207,50	206,67	268,47	170,70	240,21
71	227,85	69,02	77,24	275,75	14,88	205,75	206,65	269,76	169,50	240,65
72	222,70	69,04	76,96	271,39	14,88	204,56	205,45	271,17	167,95	240,29
73	219,17	69,04	76,70	267,11	14,84	202,76	205,10	272,64	166,53	240,44
74	216,05	69,07	76,54	263,11	14,78	201,09	204,43	274,17	164,97	247,45
75	215,07	69,20	76,49	260,81	14,78	200,06	203,53	275,69	163,66	249,50
76	216,75	69,19	76,53	260,60	14,68	199,12	202,34	277,05	162,31	249,59
77	220,84	69,26	76,59	257,96	14,68	197,85	201,41	278,07	161,02	250,50
78	216,55	69,24	76,52	254,55	14,68	196,16	200,80	280,04	159,84	251,51
79	209,02	69,29	76,29	251,90	14,57	195,15	199,03	282,58	158,38	252,05
80	201,91	69,27	75,80	247,24	14,57	193,84	197,65	284,64	157,30	252,44
81	196,66	69,37	86,39	231,83	15,98	192,23	196,59	286,63	156,06	252,66
82	190,24	69,44	76,94	258,06	14,48	191,06	196,06	289,23	154,92	253,51
83	194,37	69,57	76,46	248,27	14,38	189,49	195,75	291,45	153,73	253,40
84	195,06	69,54	75,92	262,78	14,38	187,73	195,47	293,66	152,48	253,46
85	191,11	69,55	75,39	329,55	14,38	186,72	195,20	296,17	151,34	253,24
86	186,54	69,64	75,29	318,22	14,38	186,06	194,68	298,03	150,04	252,65
87	182,90	69,73	75,16	308,04	14,28	184,89	194,31	301,36	148,83	251,80
88	180,66	70,14	75,09	303,93	14,28	184,01	193,66	303,90	147,90	250,71

89	178,72	70,21	74,66	299,43	14,18	193,15	193,12	308,30	148,59	348,73
90	178,18	69,94	74,78	292,44	14,18	191,96	192,06	306,53	145,03	348,04
91	173,73	69,97	74,64	287,29	14,18	191,23	191,25	310,74	144,51	347,75
92	171,45	69,94	74,51	282,32	14,18	190,16	190,97	312,73	143,15	346,79
93	169,55	69,78	74,53	277,96	14,08	179,22	190,13	314,57	142,46	345,81
94	167,70	69,78	74,41	275,89	14,08	178,22	189,42	316,28	141,46	344,74
95	167,89	69,69	74,25	284,41	14,08	177,34	188,45	317,78	140,46	343,50
96	167,96	69,70	74,41	288,35	13,98	176,21	188,33	319,05	139,53	342,27
97	177,89	69,63	74,09	301,00	13,95	175,47	187,57	320,17	138,78	340,90
98	189,73	69,72	75,66	480,94	13,87	174,74	186,68	321,19	137,93	339,46
99	229,87	69,79	76,75	619,89	13,78	174,14	186,50	322,10	137,08	338,29
100	255,01	69,74	77,57	688,73	13,60	173,42	185,53	322,98	136,53	337,42
101	276,87	69,91	78,55	701,48	13,58	173,01	185,32	323,89	136,11	336,66
102	292,96	69,66	79,56	715,97	13,48	172,81	185,29	324,74	136,33	337,16
103	304,99	70,04	80,17	724,85	13,37	173,00	185,58	325,62	137,03	337,65
104	317,28	70,16	80,74	757,98	13,17	173,34	185,93	326,51	138,29	339,04
105	324,83	70,11	81,17	752,95	13,08	173,81	186,59	327,29	139,67	340,76
106	331,91	70,22	81,66	742,93	12,96	174,95	188,29	327,98	141,39	342,07
107	337,96	70,47	82,17	734,04	12,87	176,12	189,81	328,66	142,94	343,50
108	344,41	70,53	82,65	766,78	12,86	177,34	192,14	329,46	145,24	345,13
109	370,89	70,62	83,92	820,18	12,46	178,41	194,25	330,39	148,51	351,13
110	397,71	70,65	84,91	946,74	12,31	180,25	196,07	331,43	152,06	354,25
111	412,20	70,54	85,66	950,04	11,96	182,80	201,31	332,61	156,35	357,37
112	425,00	70,77	87,66	954,33	11,87	185,69	205,83	334,18	161,05	360,91
113	435,23	70,80	88,11	962,25	11,78	189,20	211,84	336,03	167,17	364,79
114	443,13	70,80	88,35	962,55	11,58	193,26	218,11	337,83	172,92	368,64
115	446,83	70,94	88,59	963,93	11,36	197,54	224,58	339,10	180,44	372,95
116	450,70	71,05	89,02	964,08	11,17	202,27	231,74	340,09	188,08	377,15
117	454,78	71,11	89,48	964,58	11,08	207,21	239,58	340,98	196,00	381,40
118	458,94	71,18	90,42	966,71	10,88	212,84	247,83	341,86	203,34	385,87
119	459,35	71,42	90,78	960,75	10,68	218,77	255,50	342,67	212,11	390,54
120	461,83	71,36	90,66	1018,32	10,57	224,71	263,90	344,03	219,01	395,12
121	466,11	71,55	91,12	1042,80	10,38	231,15	272,12	345,31	227,64	399,94
122	470,84	71,33	92,17	1075,85	10,18	237,57	280,53	346,66	236,02	404,79
123	475,12	71,52	92,00	1066,78	9,97	244,00	289,20	348,17	244,35	409,96
124	478,10	71,64	91,70	1099,19	9,86	250,31	297,96	349,65	252,39	415,02
125	484,85	71,69	92,14	1104,95	9,80	256,59	306,89	351,46	260,44	419,87
126	490,48	71,77	92,91	1105,83	9,39	263,26	315,96	353,54	267,50	424,93
127	492,92	71,68	93,24	1094,83	9,27	269,87	323,40	353,03	275,15	430,26
128	494,01	71,93	93,14	1091,47	9,07	275,87	331,14	353,50	283,25	435,85
129	494,29	71,66	93,77	1066,71	8,90	282,09	340,12	354,24	290,92	441,65
130	496,39	71,91	93,94	1092,80	8,78	288,62	347,15	355,14	297,63	447,60
131	498,84	71,91	94,47	1094,72	8,57	294,96	354,84	356,14	305,73	453,54
132	500,84	71,85	94,15	1092,23	8,37	301,20	362,20	356,87	311,57	459,53
133	501,05	71,94	94,29	1079,93	8,28	307,12	370,00	357,51	317,59	465,63
134	501,19	71,69	94,23	1092,42	8,08	312,83	377,37	358,23	323,30	471,63
135	501,79	72,27	94,45	1088,30	7,87	318,09	385,31	359,07	329,94	478,00
136	502,88	72,33	94,60	1099,70	7,87	323,49	392,89	360,06	336,02	484,22
137	503,38	72,66	94,89	1107,60	7,58	328,59	399,58	361,09	341,78	490,42
138	504,05	72,49	95,11	1113,19	7,38	333,67	405,95	364,23	347,50	496,40
139	505,76	72,46	94,90	1115,83	7,17	338,61	412,24	366,97	353,36	502,33
140	506,19	72,17	95,00	1123,21	7,07	343,99	417,91	368,79	358,42	508,01
141	507,34	72,42	93,59	1130,98	6,88	348,98	423,68	372,33	361,39	513,54
142	506,53	72,66	95,29	1130,23	6,67	353,87	430,95	374,39	366,03	518,72
143	507,57	72,66	95,26	1131,37	6,47	358,49	436,67	376,11	371,29	523,63
144	508,43	72,71	95,59	1132,23	6,37	363,75	441,44	377,67	375,37	528,57
145	508,94	73,12	95,49	1124,45	6,27	368,28	447,65	379,28	380,52	533,32
146	509,34	73,28	95,22	1125,52	6,08	373,42	453,33	381,09	384,18	538,00
147	509,27	72,47	95,27	1130,98	5,87	378,81	458,50	383,06	387,33	542,34
148	509,41	73,30	95,44	1130,68	5,77	383,80	462,29	385,28	392,33	546,48
149	509,12	73,24	95,70	1132,34	5,57	388,40	469,98	387,78	394,92	550,30
150	509,96	72,70	95,62	1135,20	5,38	394,81	475,31	390,39	397,97	554,14
151	507,11	72,78	95,62	1133,63	5,27	400,02	480,09	393,18	401,04	557,75
152	508,93	73,10	95,49	1124,62	5,17	405,95	484,26	396,03	404,98	561,25
153	509,73	73,16	94,65	1100,62	4,97	411,69	488,74	399,00	407,55	564,53
154	509,35	73,20	95,09	1099,31	4,87	417,85	489,97	402,02	410,51	567,66
155	496,12	73,37	95,09	1046,19	4,68	423,80	493,29	405,09	413,72	571,01
156	492,91	73,62	95,05	1039,50	4,66	429,90	493,89	408,32	415,91	574,06
157	489,58	73,32	95,02	1018,78	4,47	435,71	499,35	411,39	415,94	577,15
158	485,71	73,46	94,66	999,97	4,37	441,59	501,71	414,51	417,31	580,16
159	482,01	73,70	94,10	970,76	4,27	447,16	503,06	417,76	418,31	583,05
160	477,03	73,64	93,66	944,09	4,17	452,84	505,49	421,10	418,66	585,80
161	474,10	73,70	93,90	927,93	4,08	457,45	507,44	424,79	418,62	588,23
162	469,16	73,59	93,31	918,91	3,97	462,07	507,89	428,48	418,13	590,67
163	466,33	73,60	92,77	908,09	3,87	466,24	508,46	432,04	419,22	592,74
164	463,76	73,66	92,50	898,09	3,77	467,92	508,74	435,58	418,96	595,01
165	460,29	73,61	92,79	891,27	3,67	471,75	509,84	439,25	419,08	597,24
166	457,50	73,93	92,30	885,16	3,67	474,85	509,58	442,90	419,17	599,04
167	454,11	74,03	91,93	878,59	3,57	477,03	509,57	446,45	418,64	600,62
168	451,57	73,50	92,03	872,67	3,47	480,41	509,60	450,03	418,73	602,17
169	448,52	73,50	91,65	867,53	3,36	482,66	509,39	453,35	417,46	603,29
170	448,52	73,50	91,65	867,53	3,36	482,66	509,39	453,35	417,46	603,29
171	472,74	73,66	121,97	828,16	3,27	494,84	513,28	467,70	409,58	607,97
172	432,84	74,06	84,90	722,10	3,07	490,71	512,53	470,08	406,37	606,52

POLYTESTS
TESTING THROUGH YOUR REALITY

Date: 2023-10-02 Manufacturer: Hearthstone Model: 8024

Project #: pI 20294 Run: 1 Tech: MM Reviewer: DD

- kindling 51LBS Start Fire
- After 2min close Door
- Fan off
- At 1LBS insert pre load, open Fan and close bypass
- After 10min close Door
- Re open Door for 6min
- At 32LBS Open Door, Rack Coal Bed close Door
- After 2min insert load and close Fan close Door immediately
- After 30minutes open Fan High

TEST LOAD CONFIGURATION

POLYTESTS
TESTING THROUGH YOUR REALITY

PRE / POST CHECKS

Date: 2023-10-02 Manufacturer: Hearthstone Model: 8024

Project #: PT 2-2-94 Run: 1 Tech: MA Reviewer: BP

	Equipment #	Time	12%	22%
Moisture Meter Calibration Check:	EM 334	7:00	ok	ok

	Pre-Test	Post-Test
Facility Conditions:		
Air Velocity from less than 2 feet	0 (max50 Fpm)	0 (max50 Fpm)
Smoke Capture Check (tunnel velocity)	ok	NA
Picture	4 sides ok	ok
Wood Heater Conditions:		
Date Wood Heater Stack Cleaned	2023-10-02	
Date Dilution Tunnel Cleaned	2023-10-02	
Induced Draft Check (max 0.005 H2O)	ok	
Traverse before ignition	ok	
Temperature System:		
Ambient (65°-90°F)		0h °F
Proportional Checks:		
Thermocouple check	ok	
Pitot Clean	ok	
Pitot verification	ok	
Pictures for report	Side Coal bed Load Load in stove Fuel adjustment	ok ok ok ok ok
Load Length 5/6 of firebox Length +- 1inch		ok

POLYTESTS
TESTING THROUGH YOUR REALITY

Date: 2021-10-02 Manufacturer: Hearthstone Model: 8024

Project #: PI 20299 Run: 1 Tech: MM Reviewer: DP

Leakage Checks Tunnel Samplers

	System 1st hour		System 1		System 2		Ambient	
Unplugged Flow Rate = .25cfm	Pre-Test ASTM (-15) CSA B415 (-5)	Post-Test (Max test)	Pre-Test ASTM (-15) CSA B415 (-5)	Post-Test (Max test)	Pre-Test ASTM (-15) CSA B415 (-5)	Post-Test (Max test)	Pre-Test ASTM (-15) CSA B415 (-5)	Post-Test (Max test)
Vacuum (inches Hg.)	-10	-10	-10	-10	-10	-10	-10	-10
Final 1minute DGM (Liter)	2574.32	2584.48	855593.36	854398.90	60=004.70	60=861.99	466168.30	466806.45
Initial 1minute DGM (Liter)	2572.32	2584.48	853593.26	854398.80	60=004.70	60=861.99	466168.28	466806.45
Change (Liter)	∅	∅	0.10	0.10	∅	∅	0.02	∅
Allowable leakage .04 x Sample rate or 0.28Lpm CSA B415 (0.56)								
Check OK	ok	ok	ok	ok	ok	ok	ok	ok

POLYTESTS

Date: 2023-10-02 Manufacturer: Hearthstone Model: 8024

Project #: PI 20294 Run: 1 Tech: MJM Reviewer: BP

Leakage Checks Flue Gas Sampler

Plugged Probe	Pre-Test	Post Test
Vacuum (inches Hg.)	-5	-5
Rotameter Reading (mml/min.)	0	0
Flow Rate (lpm)	1.5	1.5
Allowable (.02 x Sample Rate)	30	30
Check OK	ok	ok

Leakage Checks Pitot

Plugged Probe	Pre-Test 3 H2o static	Pre-Test 0.4-0.5 H2o velocity	Post Test 3 H2o Static	Post Test 0.4-0.5 H2o velocity
Vacuum (inches Hg.)	3	.4	3	.4
Check OK (no change after 15 sec.)	ok	ok	ok	ok

POLYTESTS
TESTING THROUGH YOUR REALITY

Date: 2023-10-02 Manufacturer: Hearthstone Model: 8024

Project #: PE 2292 Run: 1 Tech: M M Reviewer: DO

Scale Type	Audit		Measured Weight
	Equipment #	Weight	
Platform	EM 090	44 lbs, Class F	44 lbs
Platform	EM 205	10,00 Kg, Class F	10,00 Kg
Wood	EM-090	~~44~~ 45 lbs, Class F	45 lbs
Analytical	EM 335	100 mg, Class S	100 mg
Analytical	EM 129	200 g, Class S	200 g

LIMITS OF WEIGHT RANGES

ANALYTICAL SCALE: .....50%-150% of dry filter weight, ± 0.1 mg
PLATFORM SCALE ..... 20%-80% of ideal test load weight, ± 0.1 lbs or 1%
WOOD SCALE..... 20%-80% of ideal test load weight, ± 0.01 lbs or 1%

POLYTESTS

CONTINUOUS ANALYZERS

Date: 2023-10-02 Manufacturer: Hearthstone Model: 8024

Project #: PT 20294 Run: 1 Tech: MM Reviewer: DP

FOR TUNNELS < 12 in

Barometric pressure (P_{bar}) _____ (KPa.) Static pressure (P_q) 019 (inches w.c.)
Inside diameter: Port A _____ Port B _____
Tunnel cross sectional area: .1963Ft^2
Pitot tube type: Standard

Traverse Point	Position (inches)			Velocity Head Δ_p (inches H_2O)	Tunnel Temperature (°F)
Tunnel diameter	6 po	7 po	8 po		
A- Centroid	3.00	3.50	4	0078	68 13
B - Centroid	3.00	3.50	4	0077	68 10
A-1	0.40	0.50	0.50	0064	68 13
A-2	1.50	1.75	2	0075	68 11
A-3	4.50	5.25	6	0076	68 11
A-4	5.60	6.5	7.5	0065	68 22
B-1	0.40	0.50	0.50	0064	68 10
B-2	1.50	1.75	2	0073	68 19
B-3	4.50	5.25	6	0075	68 19
B-4	5.60	6.5	7.5	0064	68 14
				AVERAGE	

POLYTESTS

TESTING THROUGH YOUR REALITY

CONTINUOUS ANALYZERS

Date: ~~2023-09-~~ 2023-10-02 Manufacturer: Heartstone Model: 8024

Project #: PI 20294 Run: 1 Tech: MM Reviewer: DP

FOR TUNNELS 12 in.

Barometric pressure (P_{bar}) _____ (KPa.) Static pressure (P_{st}) _____ (inches w.c.)
Pitot tube type: Standard

Traverse Point	Position (inches)	Velocity Head Δ_p (inches H_2O)	Tunnel Temperature (°F)
A Center	6		
B Center	6		
A-1	0.53		
A-2	1.75		
A-3	3.55		
A-4	8.45		
A-5	10.25		
A-6	11.47		
B-1	0.53		
B-2	1.75	N.A	
B-3	3.55		
B-4	8.45		
B-5	10.25		
B-6	11.47		

POLYTESTS
TESTING THROUGH YOUR REALITY

CONTINUOUS ANALYZERS

Date: 2023-10-02 Manufacturer: Hearthstone Model: 8024

Project #: PE 20294 Run: 1 Tech: MM Reviewer: DP

Pre-Test (Adjust and Record)

	ZERO		SPAN		CAL. (Record Only)	
CO	0	0	3035	3000	1019	1000
Tolerance CO	0	+/- 0.02	0035	+/- 0.15	0019	+/- 0.05
CO_2	0	0	18.00	18.00	9.84	10.00
Tolerance CO2	0	+/- 0.02	0	+/- 0.5	0.16	+/- 0.5
O_2 informative CSA B415 calculated value	na	na	na	na	na	na
	Actual	Should Be	Actual	Should Be	Actual	Should Be

Post Test (Record Only)

	Zero	Span	Cal.	Zero Drift	Limit	Span Drift	Limit	Cal. Drift	Limit	OK?	Not OK*
CO	0	3029	1015	0	0.02	0.006	0.15	0.004	0.05	✓	
CO_2	0	18.01	9.88	0	0.02	0.01	0.5	0.04	0.5	✓	

POLYTESTS
TESTING THROUGH YOUR REALITY

TEST DATA LOG

Date: ~~[illegible]~~ 2023-10-02 Manufacturer: Hearthstone Model: 8024

Project #: PI 20296 Run: 1 Tech: MM Reviewer: NP

RAW DRY GAS METER READINGS

		System 1st hour	System 1	System 2	Blank
Test	Final (Liter)	2584,35	854397,26	602859,16	466806,46
	Initial (Liter)	2572,43 853592,42 MM	853592,42 602001,90 NP	602001,90	466168,30

AMBIENT CONDITIONS

	Before	After
Barometer (kPa):	101,8	101,4
Dry Bulb (F):	73,0	71,9
Humidity (%):	50,4	48,6

POLYTESTS
TESTING THROUGH YOUR REALITY

FUEL DATA

Date: 2023-10-02 Manufacturer: Hearthstone Model: 8024

Project #: PJ 20294 Run: 1 Tech: MM Reviewer: DP

FUEL DESCRIPTION:

Type of wood:

PRE-TEST LOAD

Piece Size	Weight	Meter Moisture Content (% dry) *				
1 1/2 x 3 1/2 x 17 in.	1 96 lbs.	204	203	202	204	206
1 1/2 x 3 1/2 x 17 in.	1 932 lbs.	200	199	193	192	191
1 1/2 x 3 1/2 x 17 in.	1 862 lbs.	200	204	200	200	201
1 1/2 x 3 1/2 x 17 in.	2 138 lbs.	196	193	194	192	193
1 1/2 x 3 1/2 x 12 in.	1 368 lbs.	200	192	193	194	191
1 1/2 x 3 1/2 x 12 in.	1 412 lbs.	210	211	210	219	213
1 1/2 x 3 1/2 x 12 in.	1 340 lbs.	199	198	196	193	193
1 1/2 x 3 1/2 x 12 in.	1 372 lbs.	200	201	203	204	203
1 1/2 x 3 1/2 x 12 in.	1 412 lbs.	193	192	191	192	192
1 1/2 x 3 1/2 x 12 in.	1 406 lbs.	201	203	202	201	200
x x in.	lbs.					
x x in.	lbs.					
x x in.	lbs.					
x x in.	lbs.					
x x in.	lbs.					
x x in.	lbs.					
x x in.	lbs.					
x x in.	lbs.					
x x in.	lbs.					
x x in.	lbs.					
x x in.	lbs.					
x x in.	lbs.					
x x in.	lbs.					

TEST LOAD WEIGHT: 16 200 lbs

POLYTESTS
TESTING THROUGH YOUR REALITY

FUEL DATA

Date: 2023-10-01 Manufacturer: Heartbeat Model: 8024

Project #: pZ 20299 Run: 1 Tech: MP Reviewer: [illegible]

FUEL DESCRIPTION:

Type of wood:

TEST LOAD

Piece Size		Weight		Meter Moisture Content (% dry)*				
1 1/2	x 3 1/2 x 175 in.	166	lbs.	211	206	209	207	208
1 1/2	x 3 1/2 x 175 in.	1 712	lbs.	210	209	207	209	206
1 1/2	x 3 1/2 x 175 in.	1 870	lbs.	194	200	198	20	199
3 1/2	x 3 1/2 x 175 in.	4 230	lbs.	199	196	198	197	197
3 1/2	x 3 1/2 x 175 in.	428	lbs.	201	208	203	206	206
	x x in.		lbs.					
1 1/2	x 3/4 x 5 in.	0 102	lbs.			196		
1 1/2	x 3/4 x 5 in.	0 094	lbs.			198		
1 1/2	x 3/4 x 5 in.	0 114	lbs.			196		
1 1/2	x 3/4 x 5 in.	0 090	lbs.			198		
1 1/2	x 3/4 x 5 in.	0 082	lbs.			198		
1 1/2	x 3/4 x 5 in.	0 104	lbs.			199		
1 1/2	x 3/4 x 5 in.	0 096	lbs.			201		
1 1/2	x 3/4 x 5 in.	0 114	lbs.			201		
1 1/2	x 3/4 x 5 in.	0 096	lbs.			203		
1 1/2	x 3/4 x 5 in.	0 092	lbs.			202		
1 1/2	x 3/4 x 5 in.	0 102	lbs.			206		
1 1/2	x 3/4 x 5 in.	0 096	lbs.			201		
1 1/2	x 3/4 x 5 in.	0 108	lbs.			209		
1 1/2	x 3/4 x 5 in.	0 098	lbs.			209		
1 1/2	x 3/4 x 5 in.	0 070	lbs.			201		
1 1/2	x 3/4 x 5 in.	0 088	lbs.			203		
	x x in.		lbs.					
	x x in.		lbs.					
	x x in.		lbs.					
	x x in.		lbs.					
	x x in.		lbs.					

TEST LOAD WEIGHT: 15 30 lbs Min 20%: ..... Max 25%: _____

POLYTESTS
TESTING THROUGH YOUR REALITY

DILUTION TUNNEL PARTICULATE SAMPLER DATA

Date: 2023-09-29 Manufacturer: Hearthstone Model: 8024

Project #: PJ 20294 Run: 1 Tech: MP Reviewer: AO

Pre-test Weight Record		TEST FILTERS					
		SYSTEM 1st hour			SYSTEM 1		
		Probe & Housing Number	Front & Back Filter Number	gaskets	Probe & Housing Number	Front & Back Filter Number	gaskets
Date	Time	016	01-02	06	017	03-04	29
2023-09-29	17:00	108 7510	0 2440	35 6813	108 9413	0 2442	34 3109
2023-10-02	9:00	108 7511	0 2439	35 6814	108 9413	0 2443	34 3108

Post-test Weight Record		TEST FILTERS					
		SYSTEM 1st hour			SYSTEM 1		
		Probe & Housing Number	Front & Back Filter Number	gaskets	Probe & Housing Number	Front & Back Filter Number	gaskets
Date	Time	016	01-02	06	017	03-04	29
2023-10-03	18:00	108 7512	0 2461	35 6836	108 9415	0 2462	34 3140
2023-10-10	8:00	108 7512	0 2458	35 6824	108 9414	0 2461	34 3118
2023-10-10	8:00	108 7512	0 2458	35 6824	108 9414	0 2461	34 3118

POLYTESTS
TESTING THROUGH YOUR REALITY

DILUTION TUNNEL PARTICULATE SAMPLER DATA

Date: 2023-09-29 Manufacturer: Hearthstone Model: 8024

Project #: pI 20294 Run: 1 Tech: MM Reviewer: DO

Pre-test Weight Record		TEST FILTERS SYSTEM 2 Probe & Housing Number	Front & Back Filter Number	gaskets	Blank Filter
Date	Time	32	05-06	38	07
2023-09-29	17:00	110 1278	02430	34 2112	0 1218
2023-10-02	9:00	110 1278	02431	34 2113	0 1217

Post-test Weight Record		TEST FILTERS SYSTEM 2 Probe & Housing Number	Front & Back Filter Number	gaskets	Blank Filter	End test time and date
Date	Time	32	05-06	38	07	2023-10-02 17:15
2023-10-02	18:00	110 1279	02451	34 2146	0 1218	
2023-10-10	8:00	110 1279	02451	34 2123	0 1218	
2023-10-10	8:00	110 1279	02451	34 2123	0 1218	

Paramètres

Tous les facteurs de corrections et autres paramètres qui peuvent être modifiés par l'utilisateur du fichier sont regroupés ici.

Code verrouillage:	HEA

Description du test

Test standard	EPA	
Run #	2	
Date	03-10-2023	
Technicien	M.M	
Project #	PI 20296	

Description de l'unité

Manufacturier	HEARTHSTONE	
Modèle	8024	
Combustion system	Cat	
Appliance type	WOOD STOVE	
Firebox volume	2,17	cu ft.
Appliance weight empty	n.a	lbs
Appliance weight full	n.a	lbs

Paramètres du test

Logging time	1	min
Manufacturer's rated heat output	n.a	BTU/h Donnée fournie par le manfacturier
Targeted category	1	
Targeted output	n.a	BTU/h
Cp steel	n.a	BTU/lb-°F

Échantillonnage

Blank sampling rate	0,20	cuft/min
Internal probe diameter	0,18	in.
Calibration Factor (DGM #1):	0,994	
Equipment number (DGM #1):	EM 178	Dimensionless
Calibration Factor (DGM #2):	0,995	
Equipment number (DGM #2):	EM 318	Dimensionless
Calibration Factor (DGM #3):	0,998	
Equipment number (DGM #3):	EM 179	Dimensionless
Calibration Factor (DGM 1st Hr):	0,998	
Equipment number (DGM 1st Hr):	EM 130	Dimensionless

Tunnel

Targeted tunnel flow rate	350	scfm
Tunnel diameter	8	in.
Molecular weight	29	29 as per ASTM E2515
Pitot tube type	Standard	
Pitot tube coefficient	0,99	Dimensionless

Project nu.	PI 20296
Date	03-10-2023
Technicien	M.M

Fuel data

Fuel type	Cord	
Fuel specie	D. Fir	
HHV	19810,0	kJ/kg
%C	48,7	
%H	6,9	
%O	43,9	
%Ash	0,5	
HHV	8519,2	Btu/lb
LHV	7451,0	Btu/lb

Default Fuel Values

	D. Fir	Oak/Maple
HHV	19 810	19 887
%C	48,73	50
%H	6,87	6,6
%O	43,9	42,9
%Ash	0,5	0,5
HHV (Btu/lb)	8519	8552
LHV (Btu/lb)	7451	7480

	Start	End
Barometer (kPa):	101,3	101
Barometer (in.Hg):	29,913879	29,825288977
Dry Bulb (F):	69,9	72,6
Humidity (%):	61,2	54,3
Air velocity (ft/min)	0	0

DGM #1st hour	Final:	2596,690	cuft	Final:	2596,690	cuft
	Initial:	2584,730	cuft	Initial:	2584,730	cuft
DGM #1	Final:	30249,726	cuft	Final:	856576,840	Liter
	Initial:	30172,893	cuft	Initial:	854401,160	Liter
DGM #2	Final:	21370,719	cuft	Final:	605151,360	Liter
	Initial:	21289,902	cuft	Initial:	602982,880	Liter
DGM room	Final:	16545,464	cuft	Final:	468515,360	Liter
	Initial:	16485,170	cuft	Initial:	466808,020	Liter

Numéro de la ligne dans "Raw data" à partir duquel les données du VRAI test commencent: 224

Autres données à rentrer: dans preload data, load data, traverse et filter set weight

Project nu.	PI 20296
Date	03-10-2023
Technicien	M.M

Preload data sheet

Test Load Weight:

Lower	Ideal	Upper
13,67	15,19	16,71

Load Volume: 0,4679 cu. ft

Loading Density: 7,717 lbs./ft3

Number of Spaces:

Spacer weight (lbs):

Load Density (wet): 35,791 lbs./ft3

Dry Wood Density: 29,678939

Piece Size (in): Thick	Wide	x Length	Weight lbs	Meter Moisture Content Dry Uncorrected %					Ave. MC x Weight	Volume Cubic Inches
1,5	3,5	17,5	1,996	20,1	20,8	20,7	20,3	20,8	40,99784	91,88
1,5	3,5	17,5	1,98	19,1	19,9	20	20	20	39,204	91,88
1,5	3,5	17,5	1,958	20,1	20,6	20,3	20,3	20,3	39,78656	91,88
1,5	3,5	17,5	1,836	20,4	20,6	20,3	20,2	20,4	37,41768	91,88
1,5	3,5	12	1,466	20,8	20,3	20,3	20,2	20,1	29,81844	63,00
1,5	3,5	12	1,238	21,1	21	21,1	21	21,6	26,19608	63,00
1,5	3,5	12	1,268	21	20,9	20,8	20,8	20,7	26,42512	63,00
1,5	3,5	12	1,228	21	21,1	21,1	20,9	21	25,81256	63,00
1,5	3,5	12	1,298	21,1	21,2	21,1	21,3	21,9	27,67336	63,00
1,5	3,5	12	1,25	20,8	20,6	20,7	20,3	20,8	25,8	63,00
1,5	3,5	12	1,228	21	21,1	21	20,9	20,8	25,73888	63,00
										0,00
										0,00
										0

FUEL LOAD DATA SHEET, CSA B415

Test Load Weight:

Lower	Ideal	Upper
13,7	15,2	16,7

* For boilers, a loading density factor of 10 lb/ft3 is applied

Load Volume: 0,41 cu. ft

Loading Density: 7,0 lbs./ft3

Number of Spaces: 16

Spacer weight: lbs

Load Density (wet): 33,4 lbs./ft3

Dry Wood Density: 27,9 lbs./ft3

Piece Size (in): Thick	Wide	Length	Weight lbs	Meter Moisture Content Dry Uncorrected %					Ave. MC x Weight	Volume Cubic Inches	Ave. MC %	
1,5	3,5	17,5	1,69	20,10	20,00	20,20	20,30	20,40	34,0976	91,88	20,2	
1,5	3,5	17,5	1,78	19,40	19,60	19,80	19,90	20,00	35,21616	91,88	19,7	
1,5	3,5	17,5	1,71	20,00	20,10	20,10	20,30	20,20	34,39912	91,88	20,1	
3,5	3,5	17,5	4,17	19,10	19,40	19,30	19,50	19,40	80,57044	214,38	19,3	
3,5	3,5	17,5	4,27	19,80	19,90	19,60	19,60	19,90	84,3752	214,38	19,8	Load
										0,00		
										0,00		
										0,00		
1,5	0,75	5	0,10			19,60			1,8816	5,63	19,6	
1,5	0,75	5	0,10			19,30			2,0072	5,63	19,3	
1,5	0,75	5	0,10			19,60			1,9208	5,63	19,6	
1,5	0,75	5	0,11			19,80			2,178	5,63	19,8	
1,5	0,75	5	0,09			19,30			1,6884	5,63	19,3	
1,5	0,75	5	0,11			19,90			2,1492	5,63	19,9	
1,5	0,75	5	0,08			20,00			1,56	5,63	20,0	
1,5	0,75	5	0,11			20,10			2,211	5,63	20,1	
1,5	0,75	5	0,09			20,30			1,827	5,63	20,3	
1,5	0,75	5	0,10			20,20			2,1008	5,63	20,2	
1,5	0,75	5	0,10			20,60			2,06	5,63	20,6	
1,5	0,75	5	0,08			20,30			1,5428	5,63	20,3	
1,5	0,75	5	0,10			20,90			2,1318	5,63	20,9	
1,5	0,75	5	0,10			20,40			1,9992	5,63	20,4	
1,5	0,75	5	0,09			20,30			1,7458	5,63	20,3	spacers
1,5	0,75	5	0,10			20,30			2,03	5,63	20,3	
										0,00		
										0,00		
										0,00		
										0,00		
										0,00		
										0,00		
										0,00		
										0,00		
										0,00		
										0,00		
										0,00		
										0,00		
										0,00		
										0,00		
										0,00		
									SUM MCx 299,70212		20,0 %	

Test Load Weight: 15,16 lbs.

Dry Weight: 5,74 kg.

Average Moisture Content: %

Dry: 19,76 Dry(EPA) 19,76 Dry(B415 19,76

19,76 Must be 19-25

Wet: 16,58 must be 15,2-22

Coal Bed Range: 3,0 lbs. to 3,8 lbs.

TEST CHARGE:

Coal bed weight: 3,2 lbs.

Project nu.	PI 20296
Date	03-10-2023
Technicien	M.M

Tunnel Traverse Worksheet (for velocity calculations)

Static Pressure: 0,2 in. H20
Barometer: 29,900 in. Hg

Pour un tunnel de 12" et plus, prendre 6 lectures

	TUNNEL VELOCITY	TUNNEL TEMP	SQUARE ROOT
	In. wc	°F	
A center			0,0000
B center			0,0000
A1			0,0000
A2			0,0000
A3			0,0000
A4			0,0000
A5			0,0000
A6			0,0000
B1			0,0000
B2			0,0000
B3			0,0000
B4			0,0000
B5			0,0000
B6			0,0000
AVERAGE	#DIV/0!	#DIV/0!	0,0000

PITOT CONSTANT=
0,950

Pour un tunnel moins de 12", prendre 4 lectures

	TUNNEL VELOCITY	TUNNEL TEMP	SQUARE ROOT
	In. wc	°F	
A center	0,078	70,5	0,2793
B center	0,078	70,46	0,2793
A1	0,064	70,5	0,2530
A2	0,076	70,59	0,2757
A3	0,072	70,59	0,2683
A4	0,064	70,34	0,2530
B1	0,063	70,5	0,2510
B2	0,072	70,5	0,2683
B3	0,074	70,5	0,2720
B4	0,064	70,4	0,2530
AVERAGE	0,0705	70,4740	0,2653

Project nu.	PI 20296
Date	03-10-2023
Technicien	M.M

Filter set weight

	System 1 (g) 1st hour			System 1 (g)			System 2 (g)			Ambient blank (g)	Date	Heure	Test end date & time
	probe	front/ Back	gasket	probe	front/ Back	gasket	probe	front/ Back	gasket	Filter			
Number	34	08-09	3	38	10-11	11	40	12-12	12	14			
Before (1)													
Before (2)													
Before (3)													
Before (4)													
Before (5)	110,1039	0,2435	35,2001	110,4347	0,2464	34,4460	110,1010	0,2441	36,0197	0,1225	2023-10-02	17:00	
Before (6)	110,1040	0,2434	35,2002	110,4348	0,2463	34,4461	110,1010	0,2442	36,0196	0,1224	2023-10-03	10:00	
After (1)	110,1042	0,2435	35,2034	110,4351	0,2521	34,4493	110,1015	0,2501	36,0222	0,1226	2023-10-03	21:30	
After (2)	110,1041	0,2432	35,2020	110,4349	0,2518	34,4466	110,1011	0,2497	36,0207	0,1225	2023-10-10	08:00	
After (3)	110,1041	0,2434	35,2020	110,4349	0,2518	34,4466	110,1011	0,2497	36,0207	0,1225	2023-10-11	08:00	
After (4)	110,1041	0,2434	35,2020	110,4349	0,2518	34,4466	110,1011	0,2497	36,0207	0,1225	2023-10-12	09:00	2023-10-03 21:00
After (5)													
After (6)	110,1041	0,2434	35,2020	110,4349	0,2518	34,4466	110,1011	0,2497	36,0207	0,1225	2023-10-12	09:00	
Difference	0,0001	0,0000	0,0018	0,0001	0,0055	0,0005	0,0001	0,0055	0,0011	0,0001			
Total (mg)		1,9			6,1			6,7		0,1			
Total ajusté (mg)		**1,80**			**6,00**			**6,60**					

Project nu.	PI 20296
Date	03-10-2023
Technicien	M.M

Manufacturer: HEARTHSTONE
Model: 8024

Run: 2
Project #: PI 20266
Test Duration: 397 min

	HHV	LHV
Eff	79,00%	85,28%
Comb Eff	98,39%	98,39%
HT Eff	80,29%	86,78%
Output	12 888	kJ/h
Burn Rate	0,87	kg/h
Grams CO	150	g
Input	17 200	kJ/h
MC wet	18,50	

Note: In the "Input data", "Calc. % O_2", "Fuel Properties", and "Mass Balance" columns, [a], [c], [g], [k], [b], [c], [h], [d], [w], [j], and [k] refer to their respective variables in Clauses

Ultimate CO_2
CO_{2ult} 19,64
F_o
1,092

Overall Heating Efficiency: 79,00%
Combustion Efficiency: 98,39%
Heat Transfer Efficiency: 80,29%

Heat Output: 12 889 Btu/h
Heat Input: 16 316 Btu/h
Burn Duration: 6,62 h
Burn Rate: 1,91 lb/h
Stack Temp: 200,4 Deg. F

	Averages	0,19	8,72	1,32	20,39	11,53	134,12	25,36	0,98	0,80	0,80
INPUT DATA				Oxygen Calculation			Input Data		Combust Eff %	Heat Transfer %	Net Eff %
Elapsed Time	Weight Remaining (kg)	% CO [a]	% CO_2 [c]	Excess Air EA	Total O_2	Calc. % O_2 [g]	Flue Gas (ºC)	Room Temp (ºC)			
0,00	6,88	0,18	2,08	780,2%	20,79	18,80	132,2	24,1	99,3%	57,9%	56,3%
1,00	6,84	0,29	4,07	283,7%	20,62	15,58	124,3	24,0	95,1%	75,0%	73,5%
2,00	6,83	0,30	3,26	438,0%	20,75	17,23	137,3	24,0	93,0%	68,2%	63,4%
3,00	6,80	0,12	1,00	1636,2%	20,87	19,80	151,0	23,9	95,6%	16,6%	15,9%
4,00	6,75	0,06	1,20	1453,0%	20,86	19,62	161,1	24,0	100,6%	22,3%	22,3%
5,00	6,72	0,04	1,62	1086,8%	20,83	19,19	150,9	24,1	101,2%	42,5%	43,0%
6,00	6,70	0,05	2,97	389,0%	20,68	16,89	136,3	24,0	100,3%	71,9%	72,1%
7,00	6,68	0,04	2,68	576,9%	20,75	17,87	128,1	24,0	100,6%	67,3%	67,7%
8,00	6,66	0,04	2,68	619,3%	20,76	18,05	122,3	24,1	100,7%	67,3%	67,8%
9,00	6,66	0,04	2,76	601,1%	20,76	17,97	118,5	24,1	100,7%	68,7%	69,2%
10,00	6,66	0,04	2,97	504,1%	20,74	17,76	115,6	24,0	100,7%	70,7%	71,2%
11,00	6,66	0,03	3,23	502,3%	20,72	17,48	113,3	24,0	100,8%	72,6%	73,2%
12,00	6,61	0,03	3,43	467,1%	20,71	17,28	112,0	24,0	100,7%	73,6%	74,3%
13,00	6,61	0,04	3,49	456,3%	20,71	17,20	111,1	23,9	100,5%	74,2%	74,6%
14,00	6,60	0,04	3,44	463,2%	20,71	17,24	110,6	24,0	100,4%	74,1%	74,4%
15,00	6,57	0,04	3,43	465,1%	20,71	17,26	110,3	23,9	100,4%	74,1%	74,4%
16,00	6,57	0,04	3,46	460,6%	20,71	17,23	109,6	24,0	100,4%	74,4%	74,7%
17,00	6,57	0,04	3,52	450,0%	20,70	17,16	108,9	23,9	100,4%	74,7%	75,0%
18,00	6,52	0,05	3,62	436,0%	20,70	17,06	108,6	23,9	100,3%	75,2%	75,4%
19,00	6,52	0,05	3,78	412,9%	20,69	16,90	108,4	23,9	100,2%	75,6%	75,8%
20,00	6,48	0,06	3,81	408,7%	20,68	16,84	108,6	23,9	99,9%	75,9%	75,8%
21,00	6,48	0,07	3,91	392,0%	20,68	16,73	109,1	23,9	99,7%	76,1%	75,9%
22,00	6,43	0,07	4,30	349,0%	20,65	16,31	109,5	23,8	99,7%	77,2%	76,9%
23,00	6,43	0,07	4,51	328,0%	20,64	16,09	110,1	23,9	99,7%	77,6%	77,4%
24,00	6,43	0,07	4,69	312,0%	20,63	15,90	110,5	23,8	99,7%	78,0%	77,7%
25,00	6,39	0,09	4,73	308,2%	20,62	15,85	111,1	23,8	99,5%	78,0%	77,6%
26,00	6,39	0,10	4,77	303,9%	20,62	15,80	111,7	23,7	99,3%	78,0%	77,5%
27,00	6,37	0,09	4,86	296,3%	20,61	15,71	112,7	23,8	99,3%	78,1%	77,5%
28,00	6,34	0,09	5,02	284,1%	20,60	15,53	113,3	23,9	99,4%	78,4%	77,9%
29,00	6,30	0,09	5,19	272,2%	20,59	15,36	114,1	23,9	99,4%	78,6%	78,2%
30,00	6,30	0,09	5,32	263,1%	20,58	15,22	115,1	23,9	99,4%	78,7%	78,3%
31,00	6,27	0,09	5,40	257,9%	20,58	15,13	116,4	23,9	99,3%	78,7%	78,3%
32,00	6,25	0,09	5,34	262,0%	20,58	15,20	117,6	23,9	99,4%	78,8%	78,2%
33,00	6,21	0,11	5,50	250,2%	20,57	15,01	118,7	23,9	99,3%	78,8%	78,0%
34,00	6,21	0,11	5,60	244,2%	20,56	14,91	119,7	23,9	99,2%	78,7%	78,1%
35,00	6,20	0,09	5,80	233,4%	20,55	14,71	120,0	24,0	99,4%	79,0%	78,5%
36,00	6,16	0,10	5,63	242,0%	20,56	14,88	120,4	24,0	99,3%	78,7%	78,1%
37,00	6,16	0,11	5,78	233,3%	20,55	14,71	121,2	24,0	99,1%	78,9%	78,2%
38,00	6,11	0,11	5,94	224,3%	20,54	14,54	121,7	23,9	99,1%	79,1%	78,4%
39,00	6,07	0,11	5,99	221,6%	20,54	14,49	122,2	24,0	99,1%	79,1%	78,4%
40,00	6,07	0,11	6,06	218,3%	20,53	14,42	122,2	24,1	99,1%	79,2%	78,5%
41,00	6,02	0,11	6,09	216,6%	20,53	14,38	122,9	24,1	99,2%	79,2%	78,5%
42,00	6,02	0,11	6,11	215,7%	20,53	14,36	123,7	24,2	99,1%	79,1%	78,4%
43,00	5,98	0,12	6,08	217,1%	20,53	14,40	123,8	24,1	99,1%	79,1%	78,3%
44,00	5,98	0,12	6,13	214,6%	20,53	14,34	124,0	23,9	99,0%	79,1%	78,3%
45,00	5,93	0,13	6,19	211,0%	20,52	14,27	124,3	24,0	99,0%	79,2%	78,4%
46,00	5,93	0,13	6,39	201,3%	20,51	14,06	125,2	24,2	99,0%	79,4%	78,6%
47,00	5,89	0,13	6,60	192,1%	20,50	13,83	125,7	24,1	99,0%	79,6%	78,8%
48,00	5,88	0,13	6,91	183,1%	20,48	13,51	127,0	24,1	99,0%	79,8%	79,0%
49,00	5,84	0,13	7,52	158,0%	20,43	12,85	128,3	24,1	99,1%	80,3%	79,6%
50,00	5,84	0,12	7,54	158,0%	20,43	12,84	128,7	24,1	99,1%	80,3%	79,6%
51,00	5,80	0,12	7,49	159,2%	20,44	12,89	129,6	24,2	99,1%	80,4%	79,7%
52,00	5,75	0,11	7,65	153,1%	20,43	12,72	130,2	24,2	99,3%	80,3%	79,6%
53,00	5,71	0,10	7,72	151,2%	20,42	12,65	130,1	24,2	99,4%	80,6%	80,1%
54,00	5,71	0,10	7,82	148,1%	20,42	12,55	130,3	24,2	99,4%	80,7%	80,2%
55,00	5,66	0,09	8,04	141,0%	20,40	12,31	130,2	24,2	99,5%	80,9%	80,5%
56,00	5,66	0,08	8,26	135,3%	20,39	12,09	129,7	24,2	99,8%	81,2%	80,9%
57,00	5,62	0,09	8,40	129,9%	20,38	11,88	129,2	24,3	99,8%	81,4%	81,2%
58,00	5,62	0,10	8,09	139,7%	20,40	12,25	129,0	24,2	99,4%	81,1%	80,6%
59,00	5,57	0,10	7,81	148,2%	20,42	12,55	128,3	24,2	99,4%	80,9%	80,4%
60,00	5,52	0,12	7,47	158,9%	20,44	12,91	127,9	24,2	99,2%	80,3%	79,8%
61,00	5,52	0,19	7,67	150,0%	20,42	12,66	130,2	24,3	98,4%	80,3%	79,2%
62,00	5,48	0,21	8,01	138,9%	20,40	12,28	132,1	24,3	98,2%	80,7%	79,2%
63,00	5,47	0,22	8,37	128,0%	20,37	11,89	133,8	24,3	98,2%	80,9%	79,4%
64,00	5,43	0,23	8,65	121,1%	20,35	11,59	136,5	24,4	98,2%	81,0%	79,5%
65,00	5,39	0,24	8,90	113,4%	20,33	11,25	138,5	24,3	98,1%	81,1%	79,5%
66,00	5,39	0,25	9,19	108,0%	20,32	11,20	140,3	24,4	98,1%	81,1%	79,5%
67,00	5,34	0,25	9,31	105,3%	20,31	10,88	142,5	24,4	98,1%	81,0%	79,3%
68,00	5,30	0,26	9,41	103,3%	20,30	10,77	144,2	24,3	98,1%	81,0%	79,4%
69,00	5,25	0,26	9,47	101,9%	20,30	10,70	145,5	24,4	98,1%	80,9%	79,4%
70,00	5,21	0,26	9,52	100,9%	20,29	10,64	147,5	24,4	98,1%	80,8%	79,3%
71,00	5,21	0,25	9,51	101,2%	20,30	10,66	148,5	24,1	98,1%	80,7%	79,2%
72,00	5,16	0,25	9,49	101,7%	20,30	10,68	149,3	24,3	98,2%	80,6%	79,1%
73,00	5,16	0,25	9,51	101,3%	20,30	10,66	150,5	24,3	98,1%	80,6%	79,1%
74,00	5,12	0,25	9,49	101,7%	20,30	10,68	151,2	24,3	98,1%	80,5%	79,0%
75,00	5,07	0,25	9,56	100,0%	20,29	10,60	151,7	24,3	98,1%	80,5%	79,0%
76,00	5,07	0,25	9,54	100,7%	20,29	10,63	152,8	24,4	98,2%	80,4%	79,0%
77,00	5,03	0,25	9,61	99,3%	20,29	10,56	153,5	24,4	98,1%	80,4%	79,0%
78,00	4,98	0,26	9,72	96,8%	20,28	10,45	154,0	24,5	98,1%	80,3%	79,0%
79,00	4,98	0,26	9,87	93,9%	20,27	10,27	155,0	24,4	98,1%	80,5%	79,0%
80,00	4,94	0,27	10,05	90,3%	20,26	10,07	155,9	24,5	98,1%	80,6%	79,1%
81,00	4,89	0,28	10,25	86,8%	20,25	9,86	156,7	24,5	98,1%	80,7%	79,2%
82,00	4,84	0,28	10,47	82,7%	20,23	9,62	157,3	24,5	98,0%	80,8%	79,2%
83,00	4,84	0,29	10,64	79,7%	20,22	9,43	158,7	24,5	98,0%	80,9%	79,3%
84,00	4,80	0,29	10,74	78,0%	20,21	9,32	159,3	24,5	98,0%	80,9%	79,3%
85,00	4,79	0,30	10,94	74,7%	20,20	9,11	160,1	24,5	98,0%	81,0%	79,3%
86,00	4,71	0,31	11,23	70,2%	20,18	8,80	161,1	24,6	97,9%	81,1%	79,4%
87,00	4,71	0,33	11,40	67,5%	20,17	8,60	161,3	24,6	97,9%	81,2%	79,5%
88,00	4,66	0,34	11,52	65,7%	20,16	8,47	162,2	24,6	97,8%	81,2%	79,4%
89,00	4,62	0,35	11,62	64,2%	20,15	8,36	163,5	24,7	97,7%	81,3%	79,4%
90,00	4,62	0,36	11,70	62,9%	20,14	8,28	164,2	24,5	97,7%	81,2%	79,3%
91,00	4,55	0,37	11,80	61,4%	20,14	8,15	165,0	24,5	97,6%	81,2%	79,3%
92,00	4,53	0,38	11,85	60,7%	20,13	8,10	165,7	24,5	97,6%	81,2%	79,2%

93,00	4,48	0,39	12,01	58,5%	20,12	7,92	168,8	24,5	97,8%	81,2%	79,3%
94,00	4,43	0,39	12,11	57,2%	20,11	7,81	168,6	24,5	97,8%	81,2%	79,3%
95,00	4,43	0,40	12,23	55,6%	20,11	7,68	169,1	24,5	97,3%	81,3%	79,2%
96,00	4,39	0,40	12,27	55,0%	20,10	7,63	168,7	24,6	97,3%	81,2%	79,2%
97,00	4,35	0,41	12,33	54,2%	20,10	7,57	169,6	24,6	97,3%	81,2%	79,2%
98,00	4,30	0,40	12,31	54,6%	20,10	7,59	169,8	24,5	97,3%	81,2%	79,2%
99,00	4,25	0,40	12,29	54,8%	20,10	7,61	170,5	24,6	97,3%	81,2%	79,1%
100,00	4,25	0,38	12,26	55,4%	20,11	7,65	170,8	24,6	97,6%	81,1%	79,2%
101,00	4,21	0,37	12,26	55,5%	20,11	7,66	171,5	24,7	97,7%	81,1%	79,2%
102,00	4,16	0,37	12,31	54,9%	20,10	7,61	171,7	24,9	97,7%	81,1%	79,2%
103,00	4,12	0,36	12,26	55,6%	20,11	7,66	172,0	24,6	97,7%	81,1%	79,2%
104,00	4,07	0,36	12,26	55,6%	20,11	7,67	172,4	24,8	97,8%	81,0%	79,2%
105,00	4,07	0,36	12,26	55,6%	20,11	7,65	172,7	24,8	97,8%	81,0%	79,2%
106,00	4,03	0,35	12,29	55,3%	20,10	7,64	172,8	24,4	97,8%	81,0%	79,2%
107,00	3,98	0,35	12,21	56,4%	20,11	7,73	173,1	24,7	97,8%	81,0%	79,2%
108,00	3,94	0,34	12,21	56,4%	20,11	7,73	173,3	24,7	97,9%	81,0%	79,2%
109,00	3,93	0,34	12,21	56,0%	20,11	7,73	173,1	24,6	97,9%	81,0%	79,2%
110,00	3,89	0,34	12,15	57,3%	20,12	7,80	173,3	24,7	97,9%	80,9%	79,2%
111,00	3,85	0,34	12,18	56,9%	20,11	7,77	173,0	24,8	97,9%	81,0%	79,2%
112,00	3,80	0,34	12,20	56,6%	20,11	7,74	172,9	24,8	97,9%	81,0%	79,3%
113,00	3,76	0,34	12,22	56,4%	20,11	7,72	172,4	24,8	97,9%	81,0%	79,3%
114,00	3,75	0,34	12,16	57,2%	20,11	7,76	172,0	24,9	97,9%	81,0%	79,3%
115,00	3,71	0,33	12,10	58,1%	20,12	7,86	172,0	24,9	97,9%	81,0%	79,3%
116,00	3,68	0,33	12,01	59,2%	20,13	7,95	171,8	24,9	97,9%	80,9%	79,3%
117,00	3,66	0,32	11,93	60,3%	20,13	8,04	171,7	24,8	98,0%	80,9%	79,2%
118,00	3,62	0,32	11,90	60,8%	20,13	8,08	171,5	24,9	98,0%	80,9%	79,3%
119,00	3,57	0,32	11,88	61,0%	20,13	8,09	171,4	24,8	98,0%	80,9%	79,2%
120,00	3,53	0,31	11,84	61,7%	20,14	8,14	171,3	24,9	98,0%	80,9%	79,2%
121,00	3,53	0,31	11,80	62,2%	20,14	8,19	170,8	24,8	98,0%	80,9%	79,3%
122,00	3,48	0,31	11,80	62,2%	20,14	8,19	170,7	24,9	98,0%	80,9%	79,3%
123,00	3,44	0,31	11,80	62,2%	20,14	8,19	170,3	25,0	98,0%	80,9%	79,3%
124,00	3,44	0,31	11,80	62,2%	20,14	8,18	170,1	25,0	98,0%	80,9%	79,3%
125,00	3,39	0,31	11,78	62,6%	20,14	8,20	169,8	24,8	98,0%	80,9%	79,3%
126,00	3,35	0,31	11,78	62,4%	20,14	8,22	169,4	25,0	98,0%	81,0%	79,4%
127,00	3,35	0,31	11,75	62,9%	20,14	8,24	169,3	25,1	98,0%	81,0%	79,3%
128,00	3,30	0,31	11,73	63,1%	20,14	8,26	168,7	25,1	98,0%	81,0%	79,4%
129,00	3,26	0,31	11,72	63,4%	20,15	8,28	168,3	25,1	98,0%	81,0%	79,4%
130,00	3,26	0,31	11,70	63,6%	20,15	8,29	168,4	25,0	98,0%	81,0%	79,4%
131,00	3,21	0,31	11,74	63,1%	20,14	8,25	167,8	24,9	98,0%	81,0%	79,4%
132,00	3,16	0,31	11,73	63,2%	20,14	8,26	167,3	24,9	98,0%	81,1%	79,4%
133,00	3,16	0,31	11,70	63,6%	20,15	8,30	167,6	25,1	98,0%	81,0%	79,4%
134,00	3,12	0,31	11,68	63,8%	20,15	8,31	167,5	25,1	98,0%	81,0%	79,4%
135,00	3,11	0,31	11,68	63,8%	20,15	8,31	166,9	25,2	98,0%	81,1%	79,5%
136,00	3,07	0,31	11,73	63,1%	20,14	8,26	166,7	25,2	98,0%	81,1%	79,5%
137,00	3,03	0,31	11,74	63,1%	20,14	8,25	166,4	25,2	98,0%	81,1%	79,5%
138,00	2,98	0,31	11,83	61,7%	20,14	8,16	166,3	25,3	98,0%	81,2%	79,6%
139,00	2,98	0,32	11,98	59,9%	20,13	8,01	166,1	25,0	98,0%	81,3%	79,6%
140,00	2,94	0,32	12,08	58,6%	20,12	7,90	166,1	25,2	98,0%	81,3%	79,7%
141,00	2,94	0,33	12,31	55,4%	20,11	7,63	166,1	25,1	97,9%	81,5%	79,8%
142,00	2,89	0,34	12,48	53,0%	20,09	7,47	166,5	25,3	97,9%	81,5%	79,8%
143,00	2,85	0,35	12,54	52,0%	20,09	7,38	166,6	25,4	97,9%	81,6%	79,9%
144,00	2,80	0,35	12,64	51,2%	20,08	7,27	167,0	25,3	97,9%	81,6%	79,9%
145,00	2,80	0,35	12,70	50,0%	20,08	7,20	166,7	25,3	97,9%	81,7%	79,9%
146,00	2,76	0,35	12,70	50,0%	20,08	7,20	166,9	25,3	97,9%	81,6%	79,9%
147,00	2,71	0,35	12,71	50,0%	20,08	7,20	167,6	25,4	97,9%	81,6%	79,9%
148,00	2,69	0,36	12,84	48,6%	20,07	7,04	167,6	25,4	97,7%	81,7%	79,8%
149,00	2,67	0,34	12,74	50,1%	20,08	7,16	167,6	25,4	98,0%	81,6%	80,0%
150,00	2,62	0,36	12,90	48,1%	20,06	6,98	167,9	25,4	97,9%	81,7%	80,0%
151,00	2,62	0,36	12,98	47,2%	20,06	6,90	168,4	25,4	97,9%	81,7%	80,0%
152,00	2,57	0,36	13,00	47,0%	20,06	6,87	168,4	25,4	97,3%	81,7%	80,0%
153,00	2,53	0,36	13,07	46,2%	20,05	6,80	168,9	25,2	97,9%	81,7%	80,0%
154,00	2,53	0,36	13,05	46,4%	20,05	6,82	168,9	25,2	97,9%	81,7%	79,9%
155,00	2,48	0,36	13,12	45,7%	20,05	6,75	169,1	25,4	97,9%	81,7%	80,0%
156,00	2,44	0,37	13,13	45,6%	20,05	6,73	168,6	25,5	97,8%	81,8%	80,0%
157,00	2,44	0,36	13,12	45,7%	20,05	6,75	169,2	25,5	97,9%	81,7%	80,0%
158,00	2,39	0,36	13,01	46,9%	20,06	6,86	169,0	25,5	97,9%	81,7%	80,0%
159,00	2,35	0,36	13,00	47,1%	20,06	6,88	169,6	25,4	97,9%	81,7%	80,0%
160,00	2,35	0,35	12,95	47,6%	20,06	6,93	169,3	25,2	97,9%	81,8%	79,9%
161,00	2,30	0,35	12,80	49,3%	20,07	7,09	168,7	25,3	97,9%	81,8%	79,9%
162,00	2,30	0,34	12,57	52,1%	20,09	7,30	168,6	25,3	97,9%	81,5%	79,8%
163,00	2,26	0,33	12,39	54,6%	20,10	7,56	167,9	25,6	98,0%	81,4%	79,8%
164,00	2,21	0,32	12,21	56,8%	20,11	7,74	167,7	25,5	98,0%	81,4%	79,7%
165,00	2,19	0,31	12,12	58,0%	20,12	7,84	167,3	25,5	98,0%	81,3%	79,7%
166,00	2,17	0,31	12,04	59,0%	20,12	7,93	166,5	25,3	98,0%	81,3%	79,7%
167,00	2,12	0,31	11,90	61,0%	20,13	8,08	165,6	25,3	98,1%	81,3%	79,7%
168,00	2,12	0,30	11,85	61,6%	20,14	8,14	165,4	25,6	98,1%	81,3%	79,7%
169,00	2,08	0,30	11,80	62,4%	20,14	8,19	164,7	25,4	98,1%	81,3%	79,7%
170,00	2,08	0,30	11,75	63,0%	20,14	8,25	164,4	25,4	98,1%	81,3%	79,7%
171,00	2,04	0,30	11,77	62,8%	20,14	8,23	164,2	25,5	98,1%	81,3%	79,8%
172,00	2,01	0,30	11,77	62,8%	20,14	8,23	163,8	25,6	98,1%	81,3%	79,8%
173,00	1,98	0,30	11,70	63,7%	20,15	8,30	163,5	25,5	98,1%	81,3%	79,7%
174,00	1,94	0,30	11,77	62,8%	20,14	8,22	163,1	25,6	98,1%	81,4%	79,8%
175,00	1,94	0,31	11,90	61,0%	20,13	8,08	163,0	25,6	98,1%	81,5%	79,9%
176,00	1,89	0,31	12,02	59,2%	20,13	7,95	162,8	25,7	98,0%	81,6%	80,0%
177,00	1,89	0,32	12,19	57,1%	20,11	7,77	162,9	25,7	98,0%	81,6%	80,0%
178,00	1,85	0,32	12,34	55,1%	20,10	7,60	162,2	25,7	98,0%	81,8%	80,1%
179,00	1,85	0,32	12,24	56,3%	20,11	7,71	162,2	25,5	98,0%	81,7%	80,1%
180,00	1,80	0,32	12,15	57,5%	20,12	7,80	161,8	25,7	98,0%	81,7%	80,1%
181,00	1,80	0,31	11,92	60,8%	20,13	8,05	161,3	25,6	98,0%	81,6%	80,0%
182,00	1,76	0,30	11,65	64,2%	20,15	8,34	160,7	25,5	98,1%	81,5%	79,9%
183,00	1,76	0,30	11,47	67,0%	20,16	8,55	160,2	25,7	98,1%	81,4%	79,8%
184,00	1,71	0,29	11,24	70,4%	20,18	8,80	159,2	25,7	98,1%	81,3%	79,7%
185,00	1,71	0,28	10,98	74,8%	20,20	9,10	158,8	25,8	98,1%	81,2%	79,6%
186,00	1,67	0,28	10,76	78,0%	20,21	9,32	157,6	25,7	98,1%	81,1%	79,6%
187,00	1,67	0,27	10,59	80,9%	20,22	9,50	156,3	25,8	98,1%	81,1%	79,6%
188,00	1,62	0,27	10,54	81,7%	20,23	9,55	154,6	25,7	98,2%	81,2%	79,7%
189,00	1,62	0,26	10,42	83,8%	20,23	9,68	153,1	25,8	98,2%	81,2%	79,7%
190,00	1,59	0,26	10,34	85,3%	20,24	9,77	152,5	25,9	98,2%	81,2%	79,7%
191,00	1,58	0,26	10,27	86,5%	20,24	9,84	151,6	25,9	98,2%	81,2%	79,7%
192,00	1,58	0,26	10,24	87,1%	20,25	9,87	150,8	25,8	98,2%	81,2%	79,8%
193,00	1,58	0,26	10,25	87,0%	20,25	9,87	150,2	25,8	98,2%	81,3%	79,8%
194,00	1,53	0,26	10,23	87,2%	20,25	9,90	149,2	25,8	98,2%	81,3%	79,8%
195,00	1,53	0,26	10,29	86,1%	20,24	9,82	148,7	25,4	98,2%	81,4%	79,9%
196,00	1,49	0,27	10,48	82,8%	20,23	9,62	148,0	25,9	98,1%	81,6%	80,1%
197,00	1,49	0,27	10,41	83,9%	20,23	9,69	147,2	25,9	98,1%	81,6%	80,1%
198,00	1,45	0,26	10,08	90,0%	20,26	10,05	146,4	26,2	98,2%	81,4%	79,9%
199,00	1,44	0,25	9,93	93,0%	20,27	10,21	145,6	25,8	98,2%	81,4%	79,9%
200,00	1,44	0,24	9,80	95,6%	20,28	10,35	144,6	25,8	98,2%	81,3%	79,9%
201,00	1,44	0,24	9,70	97,5%	20,28	10,46	143,6	25,9	98,2%	81,3%	79,9%
202,00	1,39	0,24	9,60	99,5%	20,29	10,58	142,6	25,7	98,2%	81,3%	79,9%
203,00	1,39	0,24	9,57	100,2%	20,29	10,60	141,9	25,9	98,2%	81,4%	79,9%
204,00	1,39	0,24	9,44	103,0%	20,30	10,74	140,6	25,8	98,2%	81,4%	79,9%
205,00	1,39	0,24	9,37	104,4%	20,31	10,81	139,3	25,8	98,2%	81,4%	80,0%
206,00	1,35	0,24	9,32	105,5%	20,31	10,87	138,7	25,8	98,2%	81,4%	80,0%

207,20	1,38	0,24	9,26	106,9%	20,31	10,94	138,0	25,8	99,2%	81,4%	80,0%
208,20	1,34	0,24	9,22	107,0%	20,32	10,97	137,0	25,8	99,2%	81,5%	80,0%
209,20	1,30	0,24	9,21	108,0%	20,32	10,99	136,6	26,0	99,2%	81,3%	80,0%
210,20	1,30	0,24	9,13	109,8%	20,32	11,08	136,0	26,0	99,2%	81,3%	80,0%
211,20	1,30	0,24	9,11	110,1%	20,32	11,09	135,2	26,0	99,2%	81,3%	80,1%
212,20	1,27	0,24	9,16	109,0%	20,32	11,04	134,3	25,9	99,2%	81,6%	80,1%
213,20	1,26	0,24	9,19	108,2%	20,32	11,00	133,7	25,9	99,2%	81,7%	80,2%
214,20	1,26	0,24	9,19	108,2%	20,32	11,01	132,8	26,0	99,2%	81,8%	80,3%
215,20	1,26	0,25	9,16	108,9%	20,32	11,04	132,5	26,0	99,1%	81,8%	80,2%
216,20	1,23	0,25	9,34	104,7%	20,31	10,84	132,0	25,9	99,1%	81,9%	80,4%
217,20	1,21	0,26	9,37	104,0%	20,30	10,80	131,4	26,0	99,1%	82,0%	80,4%
218,20	1,21	0,26	9,32	105,0%	20,31	10,86	130,7	26,0	99,1%	82,0%	80,4%
219,20	1,21	0,26	9,27	106,1%	20,31	10,91	130,1	26,1	99,1%	82,0%	80,4%
220,20	1,17	0,26	9,21	107,6%	20,32	10,98	129,4	26,1	99,0%	82,0%	80,4%
221,20	1,17	0,26	9,16	108,7%	20,32	11,03	129,1	26,1	99,0%	82,0%	80,4%
222,20	1,17	0,25	9,06	110,9%	20,33	11,14	128,1	26,1	99,0%	82,0%	80,4%
223,20	1,17	0,25	8,98	112,8%	20,33	11,23	127,6	26,1	99,1%	82,0%	80,4%
224,20	1,17	0,15	8,75	120,6%	20,35	11,52	126,7	26,2	99,9%	82,0%	81,1%
225,20	1,12	0,12	8,58	125,8%	20,37	11,72	124,8	26,2	99,2%	82,0%	81,4%
226,20	1,12	0,11	8,40	130,8%	20,38	11,93	123,5	26,0	99,3%	81,9%	81,4%
227,20	1,12	0,11	8,33	132,7%	20,38	12,00	121,7	26,0	99,3%	82,0%	81,4%
228,20	1,12	0,11	8,23	135,4%	20,39	12,10	120,2	26,1	99,3%	82,1%	81,5%
229,20	1,12	0,11	8,18	136,8%	20,39	12,15	118,9	26,1	99,3%	82,2%	81,6%
230,20	1,08	0,12	8,10	138,9%	20,40	12,24	117,6	26,3	99,2%	82,2%	81,6%
231,20	1,08	0,12	8,06	140,0%	20,40	12,28	116,9	26,0	99,2%	82,2%	81,5%
232,20	1,08	0,13	7,99	142,2%	20,40	12,36	115,6	26,2	99,1%	82,3%	81,6%
233,20	1,08	0,12	7,90	144,7%	20,41	12,44	114,8	26,4	99,1%	82,3%	81,6%
234,20	1,03	0,11	7,87	146,1%	20,41	12,49	113,7	26,3	99,3%	82,4%	81,6%
235,20	1,03	0,11	7,82	147,6%	20,42	12,54	112,7	26,1	99,3%	82,4%	81,6%
236,20	1,03	0,13	7,76	149,0%	20,42	12,60	112,0	26,2	99,1%	82,4%	81,6%
237,20	1,03	0,13	7,71	150,3%	20,42	12,65	111,5	26,2	99,0%	82,4%	81,6%
238,20	1,03	0,13	7,72	150,1%	20,42	12,63	110,7	26,2	99,1%	82,5%	81,7%
239,20	1,03	0,13	7,66	152,2%	20,43	12,70	109,8	26,1	99,1%	82,5%	81,7%
240,20	1,03	0,13	7,59	154,2%	20,43	12,77	109,2	26,4	99,0%	82,5%	81,7%
241,20	0,99	0,14	7,59	154,1%	20,43	12,77	108,7	26,2	99,0%	82,5%	81,7%
242,20	0,99	0,14	7,59	154,1%	20,43	12,77	108,2	26,3	99,0%	82,6%	81,7%
243,20	0,99	0,14	7,59	154,0%	20,43	12,77	107,5	26,1	98,9%	82,6%	81,7%
244,20	0,99	0,14	7,61	153,3%	20,43	12,75	107,2	26,4	98,9%	82,7%	81,8%
245,20	0,99	0,15	7,61	153,1%	20,43	12,74	106,9	26,3	98,9%	82,7%	81,9%
246,20	0,99	0,15	7,65	152,0%	20,43	12,70	106,4	26,4	98,8%	82,8%	81,8%
247,20	0,99	0,16	7,68	151,3%	20,42	12,68	106,2	26,4	98,9%	82,8%	81,9%
248,20	0,99	0,14	7,71	150,4%	20,42	12,64	105,8	26,4	99,0%	82,9%	82,1%
249,20	0,98	0,13	7,71	150,7%	20,42	12,65	105,0	26,3	99,1%	83,0%	82,2%
250,20	0,94	0,13	7,71	150,6%	20,42	12,65	104,2	26,2	99,1%	83,0%	82,3%
251,20	0,94	0,13	7,67	151,7%	20,42	12,69	103,9	26,4	99,0%	83,0%	82,2%
252,20	0,94	0,15	7,61	153,1%	20,43	12,74	103,8	26,4	98,8%	83,0%	82,0%
253,20	0,94	0,16	7,62	152,7%	20,43	12,73	103,3	26,4	98,8%	83,0%	82,0%
254,20	0,94	0,16	7,56	154,4%	20,43	12,79	103,3	26,3	98,7%	83,0%	81,9%
255,20	0,91	0,16	7,52	155,7%	20,43	12,83	103,3	26,3	98,7%	83,0%	81,9%
256,20	0,90	0,16	7,56	154,3%	20,43	12,79	103,1	26,2	98,7%	83,0%	81,9%
257,20	0,90	0,16	7,55	154,6%	20,43	12,80	103,1	26,3	98,7%	83,0%	81,9%
258,20	0,90	0,16	7,56	154,3%	20,43	12,78	103,1	26,1	98,7%	83,0%	81,9%
259,20	0,90	0,15	7,43	158,1%	20,44	12,93	102,7	26,3	98,9%	82,9%	81,9%
260,20	0,90	0,14	7,33	163,0%	20,45	13,05	102,2	26,2	98,9%	82,9%	82,0%
261,20	0,90	0,14	7,18	168,0%	20,46	13,21	101,7	26,3	98,9%	82,8%	81,9%
262,20	0,89	0,14	7,10	171,0%	20,46	13,30	101,3	26,2	98,9%	82,8%	81,9%
263,20	0,85	0,14	7,05	173,4%	20,47	13,35	100,9	26,4	98,9%	82,8%	81,9%
264,20	0,85	0,14	7,03	174,0%	20,47	13,37	100,5	26,4	98,9%	82,8%	81,9%
265,20	0,85	0,14	7,00	175,1%	20,47	13,40	100,2	26,5	98,9%	82,8%	81,9%
266,20	0,85	0,14	6,98	175,8%	20,47	13,42	100,0	26,5	98,9%	82,8%	81,9%
267,20	0,85	0,14	6,98	175,8%	20,47	13,42	99,9	26,3	98,9%	82,8%	81,9%
268,20	0,85	0,14	6,98	175,9%	20,47	13,42	99,4	26,4	98,9%	82,9%	82,2%
269,20	0,85	0,14	6,95	177,1%	20,47	13,45	99,2	26,3	98,9%	82,9%	81,9%
270,20	0,81	0,14	6,92	178,3%	20,47	13,49	98,6	26,4	98,9%	82,9%	81,9%
271,20	0,85	0,15	6,93	177,8%	20,47	13,47	98,2	26,1	98,9%	82,9%	81,9%
272,20	0,80	0,15	6,90	178,8%	20,47	13,50	98,1	26,4	98,8%	82,9%	81,9%
273,20	0,80	0,15	6,90	178,7%	20,47	13,50	97,9	26,4	98,8%	82,9%	81,9%
274,20	0,80	0,14	6,93	178,0%	20,47	13,48	97,8	26,4	98,9%	83,0%	82,1%
275,20	0,80	0,10	7,41	161,3%	20,44	12,90	97,1	26,4	99,4%	83,5%	83,0%
276,20	0,80	0,09	7,50	158,7%	20,44	12,89	96,5	26,4	99,5%	83,6%	83,2%
277,20	0,80	0,09	7,46	160,4%	20,44	12,94	95,8	26,3	99,5%	83,6%	83,2%
278,20	0,76	0,08	7,36	163,9%	20,45	13,05	94,7	26,3	99,5%	83,6%	83,2%
279,20	0,76	0,08	7,32	165,0%	20,45	13,08	94,0	26,0	99,5%	83,7%	83,2%
280,20	0,76	0,09	7,29	166,1%	20,45	13,12	93,3	26,1	99,5%	83,7%	83,3%
281,20	0,76	0,09	7,31	165,6%	20,45	13,10	92,6	26,1	99,5%	83,8%	83,4%
282,20	0,76	0,09	7,31	165,6%	20,45	13,10	92,2	26,1	99,5%	83,8%	83,4%
283,20	0,73	0,09	7,32	165,0%	20,45	13,08	91,7	26,1	99,5%	83,9%	83,4%
284,20	0,76	0,09	7,32	164,9%	20,45	13,08	91,0	26,0	99,5%	83,9%	83,5%
285,20	0,71	0,09	7,32	165,0%	20,45	13,08	90,5	26,0	99,5%	84,0%	83,5%
286,20	0,71	0,09	7,37	163,2%	20,45	13,03	90,0	26,0	99,5%	84,1%	83,6%
287,20	0,71	0,09	7,42	161,4%	20,44	12,98	89,6	26,1	99,5%	84,1%	83,7%
288,20	0,71	0,09	7,42	161,4%	20,44	12,98	89,1	26,0	99,5%	84,2%	83,7%
289,20	0,71	0,09	7,36	162,5%	20,45	13,01	88,7	26,1	99,4%	84,2%	83,7%
290,20	0,71	0,10	7,31	165,4%	20,45	13,10	88,4	26,1	99,4%	84,2%	83,7%
291,20	0,71	0,10	7,31	165,2%	20,45	13,09	88,1	26,0	99,4%	84,2%	83,7%
292,20	0,67	0,10	7,26	167,1%	20,45	13,15	87,7	26,1	99,4%	84,2%	83,7%
293,20	0,67	0,10	7,31	165,2%	20,45	13,09	87,4	26,1	99,4%	84,2%	83,7%
294,20	0,67	0,10	7,27	166,3%	20,45	13,13	87,0	26,0	99,3%	84,3%	83,7%
295,20	0,67	0,11	7,29	165,8%	20,45	13,11	87,0	26,0	99,3%	84,3%	83,7%
296,20	0,67	0,11	7,32	164,4%	20,45	13,07	86,7	26,1	99,3%	84,3%	83,7%
297,20	0,67	0,11	7,36	163,2%	20,45	13,04	86,4	26,0	99,3%	84,4%	83,8%
298,20	0,67	0,11	7,33	164,3%	20,45	13,07	86,1	26,1	99,3%	84,4%	83,8%
299,20	0,62	0,11	7,29	165,3%	20,45	13,11	85,9	26,1	99,3%	84,4%	83,8%
300,20	0,62	0,11	7,29	165,5%	20,45	13,11	85,6	26,1	99,3%	84,4%	83,8%
301,20	0,62	0,11	7,32	164,3%	20,45	13,07	85,5	26,1	99,3%	84,4%	83,8%
302,20	0,62	0,11	7,31	164,9%	20,45	13,09	85,2	26,0	99,3%	84,4%	83,8%
303,20	0,62	0,11	7,32	164,2%	20,45	13,07	85,3	26,0	99,2%	84,4%	83,8%
304,20	0,62	0,12	7,36	162,9%	20,45	13,03	85,0	26,0	99,2%	84,5%	83,8%
305,20	0,62	0,12	7,39	161,7%	20,44	13,00	85,0	26,0	99,2%	84,5%	83,8%
306,20	0,58	0,12	7,34	163,4%	20,45	13,05	85,0	26,1	99,2%	84,5%	83,9%
307,20	0,58	0,12	7,34	163,4%	20,45	13,05	84,6	26,1	99,2%	84,5%	83,8%
308,20	0,58	0,12	7,46	159,1%	20,44	12,92	84,7	26,0	99,1%	84,6%	83,8%
309,20	0,58	0,12	7,42	160,4%	20,44	12,96	84,6	26,0	99,1%	84,6%	83,9%
310,20	0,58	0,12	7,39	161,3%	20,44	12,99	84,5	26,0	99,1%	84,5%	83,8%
311,20	0,58	0,13	7,37	161,9%	20,44	13,01	84,5	26,0	99,1%	84,5%	83,8%
312,20	0,58	0,13	7,44	159,5%	20,44	12,93	84,6	26,0	99,0%	84,6%	83,8%
313,20	0,58	0,13	7,46	158,7%	20,44	12,91	84,6	26,0	99,0%	84,6%	83,8%
314,20	0,58	0,13	7,43	159,9%	20,44	12,95	84,7	26,0	99,0%	84,5%	83,7%
315,20	0,55	0,14	7,46	158,6%	20,44	12,91	84,7	26,1	99,0%	84,6%	83,7%
316,20	0,55	0,14	7,48	157,9%	20,44	12,89	85,1	26,1	98,9%	84,5%	83,6%
317,20	0,53	0,14	7,49	157,4%	20,44	12,87	85,2	26,1	98,9%	84,5%	83,7%
318,20	0,53	0,14	7,48	157,8%	20,44	12,89	85,2	26,2	98,9%	84,5%	83,6%
319,20	0,53	0,14	7,48	157,8%	20,44	12,89	85,5	26,0	98,9%	84,5%	83,6%
320,20	0,53	0,14	7,56	155,0%	20,43	12,80	85,4	26,0	98,9%	84,6%	83,6%

321,00	0,53	0,14	7,56	155,1%	20,43	13,90	95,5	26,1	99,9%	84,5%	83,7%
322,00	0,53	0,14	7,53	156,1%	20,43	13,80	95,7	26,0	99,9%	84,5%	83,6%
323,00	0,53	0,14	7,57	154,9%	20,43	13,79	95,7	26,0	99,9%	84,5%	83,6%
324,00	0,48	0,14	7,58	153,9%	20,43	13,77	95,5	26,0	99,9%	84,5%	83,7%
325,00	0,50	0,14	7,58	154,0%	20,43	13,77	95,5	25,9	99,9%	84,5%	83,6%
326,00	0,48	0,15	7,61	153,3%	20,43	13,76	95,5	25,9	99,9%	84,5%	83,6%
327,00	0,46	0,15	7,64	152,1%	20,43	13,71	95,9	25,9	99,9%	84,5%	83,6%
328,00	0,46	0,15	7,61	153,2%	20,43	13,74	95,9	25,9	99,9%	84,5%	83,6%
329,00	0,48	0,14	7,58	154,5%	20,43	13,78	95,8	25,9	99,9%	84,5%	83,6%
330,00	0,46	0,15	7,65	152,1%	20,43	13,71	96,1	25,9	99,9%	84,5%	83,6%
331,00	0,47	0,15	7,71	149,9%	20,42	13,63	96,0	25,8	99,9%	84,5%	83,6%
332,00	0,44	0,15	7,74	148,7%	20,42	13,60	95,8	25,9	99,9%	84,5%	83,6%
333,00	0,44	0,15	7,81	146,7%	20,41	13,53	95,9	25,8	99,9%	84,5%	83,6%
334,00	0,44	0,15	7,83	146,3%	20,41	13,51	96,2	25,8	99,9%	84,5%	83,7%
335,00	0,44	0,15	7,84	145,9%	20,41	13,50	96,2	25,8	99,9%	84,5%	83,7%
336,00	0,44	0,15	7,89	144,4%	20,41	13,44	96,3	25,8	99,9%	84,7%	83,8%
337,00	0,43	0,14	7,86	145,5%	20,41	13,48	96,2	25,8	99,9%	84,7%	83,8%
338,00	0,43	0,14	7,84	146,0%	20,41	13,50	96,2	25,8	99,9%	84,7%	83,8%
339,00	0,43	0,14	7,84	146,0%	20,41	13,50	96,1	25,8	99,9%	84,7%	83,8%
340,00	0,43	0,14	7,86	145,4%	20,41	13,48	96,1	25,8	99,9%	84,7%	83,8%
341,00	0,43	0,15	7,87	145,0%	20,41	13,46	96,1	25,8	99,9%	84,7%	83,8%
342,00	0,43	0,15	7,83	146,4%	20,41	13,51	95,9	25,8	99,9%	84,7%	83,7%
343,00	0,43	0,15	7,79	147,9%	20,42	13,55	95,9	25,8	99,9%	84,6%	83,7%
344,00	0,39	0,15	7,74	149,0%	20,42	13,60	95,8	25,8	99,9%	84,6%	83,7%
345,00	0,40	0,15	7,68	151,6%	20,43	13,69	95,8	25,7	99,9%	84,6%	83,6%
346,00	0,40	0,15	7,64	153,2%	20,43	13,71	96,0	25,8	99,9%	84,5%	83,6%
347,00	0,39	0,14	7,66	153,0%	20,43	13,80	95,9	25,8	99,9%	84,5%	83,6%
348,00	0,35	0,15	7,68	151,8%	20,42	13,70	95,8	25,8	99,9%	84,5%	83,6%
349,00	0,35	0,15	7,81	146,9%	20,41	13,53	95,8	25,8	99,9%	84,7%	83,7%
350,00	0,39	0,15	8,04	140,0%	20,40	13,29	95,7	25,8	99,9%	84,9%	83,9%
351,00	0,33	0,15	8,17	135,1%	20,39	13,14	95,7	25,7	99,9%	84,9%	83,9%
352,00	0,35	0,14	8,10	138,3%	20,40	13,23	95,7	25,8	99,9%	84,9%	83,9%
353,00	0,30	0,14	8,07	139,3%	20,40	13,26	95,9	25,7	99,9%	84,9%	83,9%
354,00	0,30	0,14	8,14	137,0%	20,39	13,16	95,9	25,7	99,9%	84,9%	84,0%
355,00	0,30	0,13	8,12	138,0%	20,39	13,21	96,0	25,8	99,9%	84,9%	84,0%
356,00	0,30	0,13	7,97	142,6%	20,41	13,37	96,0	25,8	99,9%	84,7%	84,0%
357,00	0,30	0,13	7,98	142,3%	20,41	13,41	96,0	25,7	99,9%	84,7%	84,0%
358,00	0,30	0,13	7,94	143,7%	20,41	13,43	95,9	25,7	99,9%	84,7%	84,0%
359,00	0,30	0,13	8,03	140,7%	20,40	13,30	96,0	25,8	99,9%	84,9%	84,0%
360,00	0,28	0,13	8,07	139,5%	20,40	13,27	96,0	25,7	99,9%	84,9%	84,0%
361,00	0,28	0,13	8,07	139,6%	20,40	13,26	96,2	25,7	99,9%	84,9%	84,0%
362,00	0,28	0,13	8,09	140,0%	20,40	13,26	96,1	25,7	99,9%	84,9%	84,0%
363,00	0,28	0,13	8,08	139,9%	20,40	13,26	96,2	25,7	99,9%	84,9%	84,0%
364,00	0,28	0,14	8,04	140,2%	20,40	13,29	96,2	25,7	99,9%	84,9%	83,9%
365,00	0,28	0,14	8,04	140,2%	20,40	13,29	96,3	25,7	99,9%	84,7%	83,9%
366,00	0,28	0,14	7,96	142,7%	20,41	13,38	96,2	25,7	99,9%	84,7%	83,9%
367,00	0,21	0,14	8,00	141,3%	20,40	13,33	96,3	25,7	99,9%	84,7%	83,9%
368,00	0,21	0,13	8,09	138,9%	20,40	13,24	96,2	25,7	99,9%	84,9%	84,0%
369,00	0,21	0,12	8,16	136,5%	20,39	13,15	96,3	25,7	99,9%	84,9%	84,1%
370,00	0,21	0,12	8,21	135,3%	20,39	13,10	96,3	25,7	99,9%	84,9%	84,2%
371,00	0,21	0,12	8,16	136,7%	20,39	13,15	96,4	25,7	99,9%	84,9%	84,1%
372,00	0,21	0,11	8,20	135,4%	20,39	13,14	96,4	25,7	99,9%	84,9%	84,1%
373,00	0,17	0,11	8,21	135,0%	20,39	13,12	96,3	25,7	99,9%	84,9%	84,1%
374,00	0,17	0,11	8,18	136,0%	20,39	13,16	96,2	25,7	99,9%	84,9%	84,1%
375,00	0,17	0,11	8,18	137,1%	20,39	13,16	96,2	25,7	99,9%	84,9%	84,1%
376,00	0,17	0,10	8,27	134,0%	20,39	13,07	96,3	25,7	99,9%	84,9%	84,4%
377,00	0,12	0,10	8,29	134,0%	20,39	13,04	96,3	25,7	99,9%	84,9%	84,4%
378,00	0,13	0,11	8,33	132,8%	20,39	13,00	96,3	25,7	99,9%	84,9%	84,4%
379,00	0,12	0,11	8,26	134,8%	20,39	13,07	96,3	25,7	99,9%	84,9%	84,3%
380,00	0,12	0,11	8,24	135,3%	20,39	13,10	96,4	25,7	99,9%	84,9%	84,3%
381,00	0,12	0,11	8,24	135,2%	20,39	13,09	96,1	25,7	99,9%	84,9%	84,3%
382,00	0,13	0,11	8,26	134,7%	20,39	13,07	96,7	25,7	99,9%	84,9%	84,3%
383,00	0,12	0,11	8,24	135,2%	20,39	13,09	96,7	25,7	99,9%	84,9%	84,3%
384,00	0,08	0,11	8,21	136,1%	20,39	13,12	96,8	25,7	99,9%	84,9%	84,3%
385,00	0,09	0,11	8,16	137,5%	20,39	13,16	96,8	25,7	99,9%	84,9%	84,2%
386,00	0,09	0,11	8,15	137,9%	20,39	13,19	96,8	25,7	99,9%	84,9%	84,2%
387,00	0,08	0,11	8,11	138,9%	20,40	13,23	96,9	25,7	99,9%	84,9%	84,2%
388,00	0,08	0,11	8,09	139,5%	20,40	13,26	96,8	25,7	99,9%	84,9%	84,2%
389,00	0,08	0,11	8,09	139,6%	20,40	13,27	96,7	25,7	99,9%	84,9%	84,2%
390,00	0,03	0,12	8,01	141,8%	20,40	13,33	96,7	25,7	99,9%	84,9%	84,1%
391,00	0,04	0,12	7,98	142,8%	20,41	13,37	96,7	25,7	99,9%	84,9%	84,1%
392,00	0,03	0,12	8,05	140,7%	20,40	13,30	96,9	25,7	99,9%	84,9%	84,2%
393,00	0,03	0,11	8,08	139,7%	20,40	13,26	96,1	25,7	99,9%	84,9%	84,2%
394,00	0,03	0,11	8,13	137,7%	20,39	13,19	96,3	25,7	99,9%	84,9%	84,2%
395,00	0,03	0,11	8,11	138,7%	20,40	13,23	96,8	25,7	99,9%	84,9%	84,2%
396,00	0,03	0,12	8,11	138,7%	20,40	13,23	96,8	25,7	99,9%	84,9%	84,2%
397,00	0,00	0,12	8,08	140,1%	20,40	13,28	96,9	25,7	99,9%	84,9%	84,2%

[redacted]
[redacted]

[redacted]

SFBA EPA EMISSION RESULTS

Test Duration: **397** min

PRESSURE FACTOR:	DGM 1st hr	0,971	
	DGM 1	0,978	
	DGM 2	0,976	
	DGM 3	0,998	
TEMPERATURE FACTORS	DGM 1st hr	0,984	
	DGM 1	0,980	
	DGM 2	0,976	
	DGM 3	0,982	
VOLUMES SAMPLED	DGM 1st hr	11,402	SCft
	DGM 1	73,131	SCft
	DGM 2	76,618	SCft
	DGM 3	59,004	SCft

TOTAL TUNNEL VOLUME : 139980

SAMPLE RATIOS

Sample Train 1st Hr:	1855,5
Sample Train 1:	1914,1
Sample Train 2:	1827,0

Paticulate concentration

Sample Train 1st Hr	**0,000167**	g/dscf
Sample Train 1	**0,000083**	g/dscf
Sample Train 2	**0,000087**	g/dscf
Room	**0,000002**	g/dscf

TOTAL EMISSIONS

Sample Train 1st Hr	**3,49**	g
Sample Train 1	**11,44**	g
Sample Train 2	**12,00**	g

EMISSION RATES

Sample Train 1st Hr	**3,49**	g/hr
Sample Train 1	**1,73**	g/hr
Sample Train 2	**1,81**	g/hr

	Train 1	Train 2	Train 1st Hr
Cs	8,341E-05	8,7447E-05	0,0001666

RESULTS

Average emission rate: 1,77 g/hr

Burn Rate : 0,87 Dry kg/hr

BAROMETRIC PRESSURE

Average:	29,86958376	In Hg
Start:	29,91387874	In Hg
End:	29,82528877	In Hg

DGM VALUES

DGM 1st hr	Final:	2596,690	Cuft
	Initial:	2584,730	Cuft
DGM 1	Final:	30249,726	Cuft
	Initial:	30172,893	Cuft
DGM 2	Final:	21370,719	Cuft
	Initial:	21289,902	Cuft
DGM #3	Final:	16545,464	Cuft
	Initial:	16485,170	Cuft

TEMPERATURES

DGM 1st hr	536,337	°R
DGM 1	538,787	°R
DGM 2	540,778	°R

CALIBRATION FACTORS

DGM 1st hr	0,9978
DGM 1	0,9936
DGM 2	0,9946
DGM #3	0,9982

TUNNEL FLOW RATE: 352,6 Dscfm

PARTICULATE CATCH

Total Sample Train 1:	6,10	mg
Total Sample Train 2:	6,70	mg
Total Sample Train 1 1st hour:	1,90	mg

DEVIATION: 2,41%

DATA 2023-10-05 EPA PI 20284 RUN 2 CAT 1
preburn / preload

Time	Flue	Room	Tunnel	Catalyst up	scale	Right	Back	bottom	Top	Left
acquisition	temp	temp	dry bulb							
minutes	°F	°F	°F	°F	lbs	°F	°F	°F	°F	°F
1	70,75	69,17	70,59	71,30	32,27	71,97	72,10	72,58	72,07	71,91
2	85,37	69,10	71,71	84,82	5,17	71,95	72,09	76,14	72,04	71,87
3	139,50	69,03	82,53	189,77	5,07	71,35	72,11	94,01	72,09	71,80
4	240,11	69,17	79,97	299,36	4,97	71,41	72,40	109,36	72,24	72,40
5	287,53	69,36	79,29	295,43	4,77	71,78	73,11	116,25	72,58	73,78
6	309,53	69,22	83,39	309,91	4,57	72,71	74,14	126,28	73,33	75,96
7	410,93	69,23	86,67	349,93	4,37	74,40	75,95	137,25	74,81	78,95
8	466,89	69,47	89,74	417,88	4,18	77,19	77,53	150,56	76,79	82,82
9	479,53	69,28	91,46	459,56	4,07	80,82	80,06	164,04	80,13	87,63
10	503,50	69,50	94,00	497,00	3,87	85,20	83,19	177,06	84,82	93,25
11	494,54	69,69	94,40	507,43	3,77	90,03	86,91	191,15	90,22	99,78
12	487,36	69,79	94,12	508,95	3,59	95,30	91,22	207,78	96,67	107,04
13	485,78	70,04	94,39	511,83	3,47	101,05	95,99	226,47	103,25	114,93
14	485,12	69,98	94,59	519,88	3,30	107,27	101,31	245,82	110,07	123,31
15	483,25	70,01	94,66	522,54	3,27	113,88	107,03	262,14	116,79	131,96
16	488,36	70,19	95,60	527,84	3,07	120,71	113,13	276,53	123,50	140,60
17	492,04	70,25	95,66	529,14	2,87	128,06	119,50	291,29	130,03	149,71
18	485,74	70,24	95,40	516,42	2,84	135,89	126,06	301,50	136,50	158,50
19	477,86	70,21	95,14	504,16	2,70	144,19	132,79	314,41	143,22	167,36
20	467,82	70,25	94,59	491,55	2,58	152,97	139,80	329,79	149,58	176,20
21	459,81	70,21	93,49	488,13	2,47	161,83	146,41	343,63	155,90	184,96
22	450,51	70,29	92,66	482,09	2,37	170,87	153,17	355,35	161,80	193,62
23	432,33	70,34	91,77	474,49	2,27	180,09	159,98	366,04	167,49	201,89
24	423,84	70,33	91,36	471,83	2,27	189,75	167,17	375,52	172,95	209,45
25	416,79	70,42	91,12	470,73	2,17	197,22	174,31	387,01	178,83	216,70
26	417,29	70,36	90,69	472,58	2,07	205,14	181,60	396,90	183,78	223,66
27	416,10	70,13	90,75	473,30	1,97	213,08	188,90	409,43	188,27	230,02
28	417,00	70,26	91,09	471,84	1,87	220,91	196,21	418,13	191,91	235,59
29	416,79	70,43	90,96	464,54	1,77	228,51	203,40	417,96	195,58	240,83
30	420,27	70,55	91,17	462,36	1,77	235,50	210,25	412,24	199,33	245,33
31	416,62	70,51	90,59	458,14	1,67	242,75	216,90	410,06	202,96	250,03
32	417,20	70,40	90,65	451,30	1,57	249,70	223,17	413,36	205,73	254,53
33	415,73	70,47	90,62	449,98	1,48	256,70	229,21	415,48	208,75	258,67
34	412,66	70,62	91,03	444,65	1,40	262,87	234,92	420,01	212,23	263,03
35	409,37	70,69	90,61	442,95	1,37	269,13	240,77	425,09	215,17	267,46
36	407,80	70,69	90,41	441,12	1,27	275,18	246,31	430,13	217,19	271,65
37	410,64	70,66	135,22	469,71	6,30	280,75	252,18	431,63	220,36	276,60
38	319,31	70,74	122,97	394,48	17,98	285,82	258,29	426,48	222,88	281,11
39	294,81	70,73	116,85	360,15	17,88	289,56	263,83	421,78	225,51	285,24
40	282,85	70,39	115,41	369,35	17,78	293,21	269,24	413,94	227,59	289,47
41	274,18	70,61	111,48	354,54	17,68	293,72	271,94	405,50	229,53	293,06
42	248,30	70,57	109,06	350,26	17,58	294,69	274,69	397,27	229,94	293,52
43	236,29	70,52	109,34	354,16	17,58	295,19	276,33	390,45	230,36	293,07
44	241,04	70,59	109,78	355,81	17,58	295,43	277,57	385,01	230,23	292,76
45	230,29	70,74	109,44	351,82	17,48	295,99	279,28	381,21	230,49	291,94
46	246,86	70,64	107,83	354,82	17,38	296,95	279,91	379,21	229,55	290,65
47	273,06	70,64	110,51	351,55	17,28	298,78	279,44	377,42	228,26	289,80
48	283,35	70,55	113,47	335,28	17,08	300,94	277,86	376,46	227,22	289,83
49	285,16	70,70	89,99	335,66	16,99	303,29	277,55	375,67	226,02	289,63
50	276,44	70,66	85,37	358,30	16,91	304,99	276,93	375,22	224,48	289,09
51	280,80	70,73	84,08	372,92	16,88	306,68	276,49	374,15	224,43	289,65
52	282,83	70,77	83,31	373,30	16,78	307,96	275,82	372,73	223,61	287,22
53	287,21	70,49	82,63	368,50	16,68	308,40	274,62	371,11	221,78	284,66
54	282,57	70,58	82,50	366,18	16,68	307,96	273,84	369,72	220,43	283,12
55	281,80	70,62	82,21	368,21	16,58	306,53	272,54	368,50	219,17	282,65
56	280,89	70,61	81,66	376,43	16,49	304,72	271,18	367,59	218,19	282,20
57	247,71	70,74	81,01	379,68	16,48	303,18	269,85	367,35	217,75	284,66
58	244,03	70,66	80,90	374,67	16,47	302,02	268,17	366,12	217,19	283,24
59	240,58	70,60	80,66	373,71	16,38	300,10	266,57	365,03	216,78	282,91
60	247,53	70,79	81,26	378,09	16,28	298,87	265,09	372,19	216,08	282,64
61	267,24	70,62	83,20	388,81	16,19	298,05	263,53	374,44	214,28	282,67
62	279,59	71,03	83,32	391,22	16,18	296,45	262,28	376,67	212,78	282,34
63	284,31	70,66	83,65	388,43	16,03	297,66	260,91	379,06	211,76	280,13
64	286,57	70,60	84,14	390,68	15,96	295,12	259,53	381,62	211,09	247,89
65	286,39	70,66	84,10	388,51	15,78	292,85	258,37	384,39	210,36	246,06
66	286,92	71,10	84,49	391,36	15,66	290,44	257,20	387,75	209,58	244,26
67	309,80	70,60	85,01	398,36	15,58	288,78	256,10	391,77	208,60	242,79
68	330,16	71,09	84,51	394,48	15,38	287,19	255,08	396,21	208,51	241,33
69	352,74	71,14	87,22	384,65	15,28	285,96	254,20	400,96	209,60	240,15
70	433,41	71,14	91,94	380,54	15,08	284,09	253,43	405,69	209,83	239,06
71	485,90	71,17	95,52	473,88	14,88	283,72	252,79	409,77	210,40	238,14
72	531,87	71,51	99,59	578,71	14,58	283,02	252,36	412,90	211,23	237,59
73	556,90	71,59	102,40	627,04	14,38	282,71	251,94	415,68	212,78	237,20
74	570,87	71,91	104,35	639,72	14,18	282,47	251,63	418,25	216,75	237,24
75	584,66	71,77	106,51	645,06	13,97	282,22	252,06	420,60	220,51	237,45
76	622,80	71,91	109,61	661,06	13,68	282,59	252,58	423,47	224,56	237,92
77	637,31	72,03	110,13	661,14	13,48	283,20	253,72	426,07	229,73	238,70
78	646,89	72,20	110,25	666,23	13,17	283,85	255,45	428,54	235,96	239,69
79	663,66	72,10	112,36	707,49	12,98	284,66	257,69	431,42	243,23	241,54
80	662,53	72,44	114,75	731,11	12,58	285,71	260,55	434,55	251,73	243,67
81	666,40	72,23	115,25	734,89	12,48	287,13	264,21	437,42	260,60	246,20
82	694,02	72,19	116,40	740,07	12,18	289,92	268,58	440,01	269,06	249,06
83	704,79	72,36	117,38	744,73	11,87	291,30	273,55	442,52	279,14	252,46
84	713,65	72,44	119,61	760,47	11,68	293,66	278,20	445,17	288,14	256,07
85	725,58	72,54	120,74	777,18	11,38	296,84	282,58	448,51	297,37	259,95
86	742,13	72,78	123,28	797,04	11,17	300,20	286,30	452,52	306,22	264,09
87	749,87	72,46	123,70	817,95	10,88	304,26	289,60	456,65	315,21	268,62
88	755,03	72,59	124,87	836,87	10,57	308,58	307,24	460,84	323,51	273,35

89	759,80	73,03	125,58	846,95	10,28	303,81	315,30	464,73	338,19	276,24
90	766,83	73,17	126,48	851,99	10,08	309,02	323,66	469,04	348,04	283,20
91	770,17	73,07	127,84	858,15	9,77	314,46	332,48	473,13	358,69	288,39
92	768,54	73,32	127,23	857,58	9,58	320,43	341,49	477,14	368,90	293,60
93	760,18	73,79	126,96	848,15	9,29	326,48	350,79	481,19	380,84	299,48
94	761,03	73,53	126,10	845,93	8,96	333,73	359,73	485,60	389,48	305,51
95	765,22	73,15	126,51	846,78	8,78	340,84	368,55	490,03	398,31	311,56
96	765,83	73,66	126,04	851,50	8,47	348,19	377,70	496,31	407,43	317,76
97	766,46	73,41	125,88	853,77	8,29	355,29	386,15	502,37	416,65	324,07
98	764,56	73,70	126,89	855,76	8,08	362,01	394,01	508,03	425,33	330,95
99	767,29	74,05	126,15	858,05	7,77	369,30	401,93	515,36	433,40	336,03
100	765,83	73,41	125,48	858,36	7,58	376,47	409,39	522,14	442,57	345,42
101	763,72	73,32	126,96	858,42	7,34	383,13	416,78	528,74	452,15	353,00
102	762,09	73,49	125,82	858,77	7,07	390,72	423,93	535,05	459,09	360,40
103	760,26	73,14	126,44	853,81	6,88	398,40	430,94	541,11	466,01	367,91
104	757,95	73,20	124,19	851,24	6,68	405,83	437,97	546,83	472,35	375,26
105	754,59	73,55	123,89	847,89	6,47	413,33	444,65	552,01	478,97	382,59
106	746,74	74,09	122,33	845,82	6,27	420,59	451,48	556,79	484,94	389,85
107	743,64	74,24	122,70	844,43	6,08	428,21	457,27	561,01	490,43	396,91
108	818,80	73,84	100,54	954,15	5,87	435,34	464,64	563,62	493,77	403,92
109	542,87	74,15	99,67	1004,09	5,77	441,14	470,79	566,25	496,37	410,23
110	501,12	73,55	97,30	1006,87	5,67	446,04	474,29	568,66	498,93	415,46
111	470,83	73,45	95,10	978,05	5,57	450,83	476,83	568,40	500,58	421,79
112	445,58	74,15	92,23	936,01	5,57	453,67	478,91	568,60	501,61	426,54
113	424,28	73,34	91,59	897,41	5,57	456,49	480,05	568,26	502,14	431,22
114	406,13	73,65	90,63	858,98	5,41	459,01	480,78	570,99	502,59	435,48
115	391,14	73,62	89,50	832,11	5,38	459,73	479,97	574,01	501,76	439,16
116	377,88	73,74	88,39	813,84	5,38	459,85	479,03	499,58	502,45	442,45
117	366,20	73,91	87,74	807,88	5,27	459,84	478,75	495,07	501,59	444,24
118	356,40	73,36	87,29	802,54	5,27	459,88	475,93	491,31	498,54	446,22
119	347,86	73,76	86,88	796,50	5,17	459,59	474,41	488,15	496,25	447,79
120	340,00	73,49	86,36	793,04	5,17	455,83	473,28	485,54	493,66	448,77
121	332,87	73,91	86,49	793,01	5,08	453,40	470,91	483,33	490,37	449,71
122	326,53	73,50	86,40	801,80	5,17	451,14	468,33	481,61	487,46	450,57
123	322,04	73,95	85,57	813,13	5,07	449,59	464,58	479,00	483,88	450,79
124	318,88	73,82	84,89	818,84	4,97	448,23	462,61	476,35	480,27	449,95
125	312,83	73,89	84,05	815,59	4,97	446,59	460,13	477,24	475,85	449,08
126	308,83	73,99	84,14	817,10	4,97	444,81	458,04	478,36	472,60	448,08
127	305,57	73,91	83,78	823,63	4,87	443,37	454,53	475,88	469,08	446,20
128	301,16	73,94	84,60	823,18	4,87	441,36	452,73	475,08	465,44	447,20
129	298,37	73,97	83,75	824,04	4,78	439,44	449,29	474,61	461,07	446,25
130	295,00	73,87	84,54	820,56	4,78	437,86	447,37	474,29	458,53	445,12
131	291,82	73,75	83,62	818,54	4,78	435,12	443,86	474,00	452,24	443,61
132	293,10	73,66	83,36	891,53	4,68	433,13	441,69	474,13	447,91	442,49
133	295,14	73,77	83,21	939,91	4,68	431,17	438,72	474,57	443,72	440,09
134	297,19	74,01	83,21	957,93	4,57	429,33	436,70	475,18	440,70	439,21
135	296,04	73,65	83,67	967,03	4,57	426,68	434,74	475,78	435,98	437,67
136	295,53	73,66	82,51	971,49	4,53	423,84	432,39	476,17	432,41	435,91
137	295,96	73,66	82,66	975,10	4,47	420,59	430,06	476,67	428,86	433,69
138	296,60	73,60	82,66	976,12	4,47	417,80	427,37	477,16	424,76	431,05
139	296,63	73,70	82,50	976,69	4,37	414,84	425,36	477,73	421,13	428,66
140	296,43	73,63	82,13	980,14	4,37	411,83	422,58	478,25	417,14	427,79
141	296,41	74,04	82,77	981,15	4,27	409,15	420,03	478,78	413,01	425,67
142	296,96	73,96	83,23	983,51	4,27	406,35	418,48	479,21	409,52	423,62
143	296,71	73,91	82,91	983,03	4,21	403,44	416,05	479,66	405,63	421,73
144	296,09	74,08	83,15	977,94	4,17	400,76	414,66	480,08	402,30	419,56
145	296,78	73,65	83,46	972,45	4,17	398,50	412,83	480,42	398,44	417,76
146	294,93	73,98	83,40	966,37	4,08	397,09	411,01	480,91	396,28	416,01
147	293,48	74,30	82,77	960,39	4,08	395,83	409,70	480,74	392,21	413,84
148	292,32	73,67	81,67	954,00	3,97	392,19	408,61	480,66	389,30	412,02
149	291,04	73,98	81,70	950,44	3,98	389,47	405,03	481,03	385,58	410,01
150	289,08	73,60	81,26	946,28	3,97	386,47	403,89	481,20	382,65	408,46
151	287,40	74,04	80,47	939,88	3,97	384,74	401,90	481,44	380,27	407,03
152	285,72	74,24	80,00	930,71	3,87	382,65	400,75	481,61	377,13	405,47
153	284,27	74,22	80,46	922,36	3,87	380,58	398,13	481,79	374,60	403,66
154	281,76	74,05	81,09	914,15	3,87	378,96	397,30	482,03	371,65	402,26
155	279,46	74,11	81,24	908,77	3,77	376,86	395,60	482,32	368,76	400,75
156	278,06	74,36	81,25	878,28	3,83	376,11	395,41	482,03	366,96	399,21
157	273,54	74,47	82,34	814,60	3,77	374,30	394,58	482,51	364,69	397,69
158	269,53	74,36	81,67	781,73	3,77	372,22	393,31	482,11	361,80	396,75
159	263,67	74,56	80,59	764,62	3,77	371,56	391,19	481,84	358,90	395,29
160	259,42	75,04	80,19	753,84	3,67	370,24	390,53	481,11	356,44	394,14
161	255,89	75,11	80,84	746,59	3,67	369,00	389,93	480,85	355,02	393,15
162	252,88	74,97	81,15	740,03	3,67	368,57	389,03	480,27	352,91	392,13
163	249,54	75,04	81,21	734,70	3,67	367,74	388,98	479,92	350,91	391,07
164	246,59	75,05	81,65	730,36	3,67	367,43	388,10	479,60	348,55	390,10
165	244,10	75,12	81,32	728,28	3,57	366,53	388,70	479,32	346,24	389,03
166	242,11	75,25	80,84	727,13	3,57	365,95	385,09	478,86	343,63	387,18
167	240,18	75,15	80,04	726,78	3,57	364,40	385,30	478,14	341,10	386,47
168	238,10	74,71	79,66	727,83	3,57	364,07	385,47	477,61	339,47	385,81
169	237,49	74,94	80,62	726,50	3,57	363,31	385,50	476,71	336,93	385,11
170	235,91	75,19	81,11	730,66	3,46	362,50	384,63	476,07	334,11	384,27
171	234,11	74,73	81,07	725,17	3,47	361,83	383,97	475,43	331,54	383,55
172	232,90	74,69	79,93	721,98	3,47	361,08	383,13	474,90	330,48	382,74
173	231,44	75,30	80,65	721,29	3,47	359,66	381,60	474,36	327,73	381,66
174	230,21	74,60	80,26	718,94	3,47	359,05	381,36	473,67	324,69	381,13
175	229,39	75,08	80,00	716,87	3,47	357,70	380,58	473,51	322,24	380,29
176	228,49	75,30	79,43	715,83	3,47	356,78	379,86	473,22	320,00	379,33
177	227,79	75,04	79,58	714,33	3,38	355,84	377,69	473,09	317,63	378,37
178	227,08	75,00	79,23	713,31	3,37	355,10	377,18	473,08	315,68	377,41
179	226,36	74,96	79,02	713,21	3,37	354,47	377,00	473,07	313,35	376,46

180	225,21	75,29	80,48	713,13	3,37	353,40	375,18	473,18	310,00	375,60
181	224,28	74,72	79,51	712,73	3,37	352,53	373,60	473,23	308,94	374,69
182	223,55	74,60	79,22	712,12	3,32	352,52	373,70	473,40	307,15	373,58
183	223,12	75,26	79,47	712,14	3,37	351,87	372,66	473,58	305,80	373,32
184	222,06	74,67	79,63	712,37	3,27	351,16	370,86	473,62	303,36	371,50
185	221,44	75,32	79,71	711,90	3,27	350,53	371,24	473,69	302,27	370,46
186	221,18	75,21	79,51	711,40	3,27	349,59	370,28	473,67	300,02	369,67
187	220,67	75,13	79,22	711,92	3,27	348,80	369,28	473,63	297,75	368,66
188	220,06	75,29	80,48	595,06	3,17	347,44	368,27	473,72	301,66	368,33

POLYTESTS

Date: 2023-10-03 Manufacturer: Hearthstone Model: 8024

Project #: PI 20294 Run: 2 Tech: MM Reviewer: DD

- Kindling 52 LBS start fire
- After 2 min close Door
- Fan off
- by pass open
- At 13 LBS insert preload
- After 10 min close Door
- At 600 LBS close air inlet, close by pass and open Fan low
- At 32 LBS open Door Rack coal Bed close Door
- After 2 min insert load open air inlet and and close door
- Fan off
- At 30 min open Fan Low
- At 5 min close air inlet completely

TEST LOAD CONFIGURATION

POLYTESTS

PRE / POST CHECKS

Date: 2023-10-03 Manufacturer: Hearthstone Model: 8024

Project #: PE 20295 Run: 2 Tech: MM Reviewer: DP

Moisture Meter Calibration Check:	Equipment #	Time	12%	22%
	EM-334	7:00	ok	ok

	Pre-Test	Post-Test
Facility Conditions:		
Air Velocity from less than 2 feet	0 (max50 Fpm)	0 (max50 Fpm)
Smoke Capture Check (tunnel velocity)	ok	NA
Picture	4 sides ok	ok
Wood Heater Conditions:		
Date Wood Heater Stack Cleaned	2023-10-02	
Date Dilution Tunnel Cleaned	2023-10-02	
Induced Draft Check (max 0.005 H2O)	ok	
Traverse before ignition	ok	
Temperature System:		
Ambient (65°-80°F)		ok °F
Proportional Checks:		
Thermocouple check	ok	
Pitot Clean	ok	
Pitot verification	ok	
Pictures for report	Side	ok
	Coal bed	ok
	Load	ok
	Load in stove	ok
	Fuel adjustment	ok
Load Length 5/8 of firebox Length +- 1inch		ok

POLYTESTS
TESTING THROUGH YOUR REALITY

Date: 2023-10-03 Manufacturer: Hearthstone Model: 8024

Project #: PE-20294 Run: 2 Tech: MM Reviewer: [illegible]

Leakage Checks Tunnel Samplers

	System 1st hour		System 1		System 2		Ambient	
Unplugged Flow Rate – .25cfm	Pre-Test ASTM (-15) CSA B415 (-5)	Post-Test (Max test)	Pre-Test ASTM (-15) CSA B415 (-5)	Post-Test (Max test)	Pre-Test ASTM (-15) CSA B415 (-5)	Post-Test (Max test)	Pre-Test ASTM (-15) CSA B415 (-5)	Post-Test (Max test)
Vacuum (inches Hg.)	-9	-9	-9	-9	-9	-9 ~~-9~~ MM	-9	-9
Final 1minute DGM (Liter)	2584.67	2596.76	854399.70	856578.85	602861.22	605153.38	466807.28	468515.90
Initial 1minute DGM (Liter)	2584.67	2596.76	854399.55	856578.85	602861.22	605153.38	466807.28	468515.90
Change (Liter)	Ø	Ø	0.15	Ø	0.02	Ø	Ø	Ø
Allowable leakage .04 x Sample rate or 0.28Lpm CSA B415 (0.56)								
Check OK	ok	ok	ok	ok	ok	ok	ok	ok

POLYTESTS
TESTING THROUGH YOUR REALITY

Date: 2023-10-03 Manufacturer: Hearthstone Model: 8024

Project #: PI 20294 Run: 2 Tech: MM Reviewer: DP

Leakage Checks Flue Gas Sampler

Plugged Probe	Pre-Test	Post Test
Vacuum (inches Hg.)	-5	-5
Rotameter Reading (mml/min.)	0	0
Flow Rate (lpm)	1.5	1.5
Allowable (.02 x Sample Rate)	30	30
Check OK	ok	ok

Leakage Checks Pitot

Plugged Probe	Pre-Test 3 H2o static	Pre-Test 0.4-0.5 H2o velocity	Post Test 3 H2o Static	Post Test 0.4-0.5 H2o velocity
Vacuum (inches Hg.)	3	.4	3	.4
Check OK (no change after 15 sec.)	ok	ok	ok	ok

POLYTESTS
TESTING THROUGH YOUR REALITY

Date: 2023-10-03 Manufacturer: Mettler Toledo Model: 8034

Project #: PL 20296 Run: 2 Tech: MA Reviewer: AV

Scale Type	Audit		Measured Weight
	Equipment #	Weight	
Platform	EM-090	44 lbs, Class F	44 lbs
Platform	EM-205	10,00 Kg, Class F	10,00 Kg
Wood	EM-090	440 lbs, Class F	440 lbs
Analytical	EM-335	100 mg, Class S	100 mg
Analytical	EM-129	200 g, Class S	200 g

LIMITS OF WEIGHT RANGES

ANALYTICAL SCALE: .....50%-150% of dry filter weight, ± 0.1 mg
PLATFORM SCALE ..... 20%-80% of ideal test load weight, ± 0.1 lbs or 1%
WOOD SCALE..... 20%-80% of ideal test load weight, ± 0.01 lbs or 1%

POLYTESTS

CONTINUOUS ANALYZERS

Date: 2023-10-03 Manufacturer: Hearthstone Model: 8034

Project #: 23 20294 Run: 3 Tech: MP Reviewer: DP

FOR TUNNELS < 12 in

Barometric pressure (P_{bar}) _____ (KPa.) Static pressure (P_g) _____ (inches w.c.)
Inside diameter: Port A _____ Port B ____.
Tunnel cross sectional area: .1963Ft^2
Pitot tube type: Standard

Traverse Point	Position (inches)			Velocity Head Δ_p (inches H_2O)	Tunnel Temperature (°F)
Tunnel diameter	6 po	7 po	8 po		
A- Centroid	3.00	3.50	4	0.078	70.50
B - Centroid	3.00	3.50	4	0.078	70.46
A-1	0.40	0.50	0.50	0.065	70.50
A-2	1.50	1.75	2	0.076	70.59
A-3	4.50	5.25	6	0.072	70.59
A-4	5.60	6.5	7.5	0.064	70.34
B-1	0.40	0.50	0.50	0.063	70.46
B-2	1.50	1.75	2	0.072	70.47
B-3	4.50	5.25	6	0.074	70.47
B-4	5.60	6.5	7.5	0.061	70.36
				AVERAGE	

POLYTESTS
TESTING THROUGH YOUR REALITY

CONTINUOUS ANALYZERS

Date:_____ Manufacturer:_____ Model:_____

Project #: _____ Run:_____ Tech:_____ Reviewer:_____

FOR TUNNELS 12 in

Barometric pressure (P_{bar}) _____ (KPa.) Static pressure (P_s) _____(inches w.c.)
Pitot tube type: Standard

Traverse Point	Position (inches)	Velocity Head Δ_p (inches H_2O)	Tunnel Temperature (°F)
A Center	6		
B Center	6		
A-1	0.53		
A-2	1.75		
A-3	3.55		
A-4	8.45		
A-5	10.25		
A-6	11.47		
B-1	0.53		
B-2	1.75	N.A	
B-3	3.55		
B-4	8.45		
B-5	10.25		
B-6	11.47		

Rel fichier Nr Mercure

POLYTESTS

CONTINUOUS ANALYZERS

Date: 2023-10-03 Manufacturer: Horiba Model: 8034

Project #: 02 20 294 Run: 3 Tech: MP Reviewer: DP

Pre-Test (Adjust and Record)

	ZERO		SPAN		CAL. (Record Only)	
CO	0	0	3.036	3.000	1.018	1.000
Tolerance CO	0	+/- 0.02	0.26	+/- 0.15	0.018	+/- 0.05
CO_2	0	0	17.96	18.00	9.62	~~98~~ 100 MP
Tolerance CO2	0	+/- 0.02	0.04	+/- 0.5	0.18	+/- 0.5
O_2 informative CSA B415 calculated value	na	na	na	na	na	na
	Actual	Should Be	Actual	Should Be	Actual	Should Be

Post Test (Record Only)

	Zero	Span	Cal.	Zero Drift	Limit	Span Drift	Limit	Cal. Drift	Limit	OK?	Not OK*
CO	0	3.028	1.020	0	0.02	0.002	0.15	0.002	0.05	✓	
CO_2	0	17.98	9.86	0	0.02	0.02	0.5	0.04	0.5	✓	

POLYTESTS

TEST DATA LOG

Date: 2023-10-03 Manufacturer: Heathrow Model: 8029

Project #: pJ 20294 Run: 2 Tech: MA Reviewer:

RAW DRY GAS METER READINGS

		System 1st hour	System 1	System 2	Blank
Test	Final (Liter)	259.69	856536.84	605151.36	466515.36
	Initial (Liter)	258.73	854401.16	602862.88	466809.02

AMBIENT CONDITIONS

	Before	After
Barometer (kPa):	101.3	101.0
Dry Bulb (F):	69.9	72.6
Humidity (%):	61.2	54.3

POLYTESTS

FUEL DATA

Date: 2023-10-03 Manufacturer: Hearthstone Model: 8025

Project #: PI 20194 Run: 3 Tech: JM Reviewer: DL

FUEL DESCRIPTION:

Type of wood:

PRE-TEST LOAD

Piece Size	Weight	Meter Moisture Content (% dry) *				
1 ¼ x 3 ¼ x 12 in.	1 980 lbs.	20.1	20.8	20.7	20.3	20.8
1 ¼ x 3 ¼ x 12 in.	1 980 lbs.	19.9	19.9	20	20	20.0
1 ¼ x 3 ¼ x 12 in.	1 958 lbs.	20	20.0	20.2	20.1	20.3
1 ¼ x 3 ¼ x 12 in.	1 836 lbs.	20.5	20.4	20.2	20.2	20.4
1 ¼ x 3 ¼ x 12 in.	1 960 lbs.	20.2	20.3	20.8	20.7	20.1
1 ¼ x 3 ¼ x 12 in.	1 238 lbs.	21.0	21.0	21.1	21.0	21.6
1 ¼ x 3 ¼ x 12 in.	1 268 lbs.	21.0	20.9	20.9	20.8	20.7
1 ¼ x 3 ¼ x 12 in.	1 228 lbs.	21.6	21.2	21.1	20.9	21.0
1 ¼ x 3 ¼ x 12 in.	1 298 lbs.	21.1	21.2	21.1	21.3	21.2
1 ¼ x 3 ¼ x 12 in.	1 250 lbs.	20.8	20.6	20.3	20.3	20.5
1 ¼ x 3 ¼ x 12 in.	1 228 lbs.	21.0	21.1	21.0	20.9	20.8
x x in.	lbs.					
x x in.	lbs.					
x x in.	lbs.					
x x in.	lbs.					
x x in.	lbs.					
x x in.	lbs.					
x x in.	lbs.					
x x in.	lbs.					
x x in.	lbs.					
x x in.	lbs.					
x x in.	lbs.					
x x in.	lbs.					

TEST LOAD WEIGHT: 1 15 lbs

POLYTESTS
TESTING THROUGH YOUR REALITY

FUEL DATA

Date: 2023-10-03 Manufacturer: Acorn Stone Model: 8024

Project #: PI 20294 Run: 2 Tech: MA Reviewer: DP

FUEL DESCRIPTION:

Type of wood:

TEST LOAD

Piece Size	Weight		Meter Moisture Content (% dry)*				
1 1/2 x 3 1/2 x 175 in.	1 688	lbs.	20[illegible]	20[illegible]	20[illegible]	20[illegible]	20[illegible]
1 1/2 x 3 1/2 x 175 in.	1 784	lbs.	19[illegible]	196	198	199	200
1 1/2 x 3 1/2 x 175 in.	1 708	lbs.	20[illegible]	20[illegible]	20[illegible]	20[illegible]	20[illegible]
3 1/2 x 3 1/2 x 175 in.	4 166	lbs.	191	194	193	195	194
3 1/2 x 3 1/2 x 175 in.	4 270	lbs.	198	199	196	196	199
x x in.		lbs.					
1 1/2 x 3/4 x 5 in.	0 096	lbs.			191		
1 1/2 x 3/4 x 5 in.	0 104	lbs.			198		
1 1/2 x 3/4 x 5 in.	0 098	lbs.			197		
1 1/2 x 3/4 x 5 in.	0 110	lbs.			20[illegible]		
1 1/2 x 3/4 x 5 in.	0 088	lbs.			20[illegible]		
1 1/2 x 3/4 x 5 in.	0 108	lbs.			20[illegible]		
1 1/2 x 3/4 x 5 in.	0 078	lbs.			198		
1 1/2 x 3/4 x 5 in.	0 116	lbs.			197		
1 1/2 x 3/4 x 5 in.	0 090	lbs.			196		
1 1/2 x 3/4 x 5 in.	0 104	lbs.			198		
1 1/2 x 3/4 x 5 in.	0 100	lbs.			194		
1 1/2 x 3/4 x 5 in.	0 076	lbs.			193		
1 1/2 x 3/4 x 5 in.	0 102	lbs.			194		
1 1/2 x 3/4 x 5 in.	0 098	lbs.			198		
1 1/2 x 3/4 x 5 in.	0 086	lbs.			193		
1 1/2 x 3/4 x 5 in.	0 100	lbs.			194		
x x in.		lbs.					
x x in.		lbs.					
x x in.		lbs.					
x x in.		lbs.					
x x in.		lbs.					

TEST LOAD WEIGHT: 15 162 lbs Min 20%:..... Max 25%:_____

POLYTESTS
TESTING THROUGH YOUR REALITY

DILUTION TUNNEL PARTICULATE SAMPLER DATA

Date: 2023-10-02 Manufacturer: Hearthstone Model: 8024

Project #: PE 20294 Run: 2 Tech: MM Reviewer: DP

		TEST FILTERS					
		SYSTEM 1st hour			SYSTEM 1		
Pre-test Weight Record		Probe & Housing Number	Front & Back Filter Number	gaskets	Probe & Housing Number	Front & Back Filter Number	MM gaskets
Date	Time	34	08-09	3	38	10-11	~~14~~ 11
2023-10-02	17:00	110 1039	0 2435	35 2001	110 4347	0 2464	34 4460
2023-10-03	10:00	110 1040	0 2434	35 2002	110 4348	0 2463	34 4461

		TEST FILTERS					
		SYSTEM 1st hour			SYSTEM 1		
Post-test Weight Record		Probe & Housing Number	Front & Back Filter Number	gaskets	Probe & Housing Number	Front & Back Filter Number	gaskets
Date	Time	34	08-09	3	38	10-11	11
2023-10-03	21:30	110 1042	0 2435	35 2034	110 4351	~~0 2561~~ 0 2521 MM	34 4493
2023-10-10	8:00	110 1041	0 2432	35 2020	110 4349	0 2518	34 4466
2023-10-11	8:00	110 1041	0 2434	35 2020	110 4349	0 2518	34 4466
2023-10-12	9:00	110 1041	0 2434	35 2020	110 4349	0 2518	34 4466

POLYTESTS
TESTING THROUGH YOUR REALITY

DILUTION TUNNEL PARTICULATE SAMPLER DATA

Date: 2023-10-02 Manufacturer: Hearthstone Model: 8024

Project #: 02-294 Run: 2 Tech: MM Reviewer: LP

		TEST FILTERS			
		SYSTEM 2			
Pre-test Weight Record		Probe & Housing Number	Front & Back Filter Number	gaskets	Blank Filter
Date	Time	40	12-13	12	14
2023-10-02	17:05	110 1010	0.2491	36.0197	0.1225
2023-10-03	10:00	110 1010	0.2442	36.0196	0.1224

		TEST FILTERS				
		SYSTEM 2				
Post-test Weight Record		Probe & Housing Number	Front & Back Filter Number	gaskets	Blank Filter	End test time and date
Date	Time	40	12-13	12	14	2023-10-03 21:00
2023-10-03	21:30	110 1015	0.2501	36.0222	0.1226	
2023-10-10	8:05	110 1011	0.2497	36.0207	0.1225	
2023-10-11	8:00	110 1011	0.2497	36.0207	0.1225	
2023-10-12	8:00	110 1011	0.2497	36.0207	0.1225	

Paramètres

Tous les facteurs de corrections et autres paramètres qui peuvent être modifiés par l'utilisateur du fichier sont regroupés ici.

Code verrouillage:	HEA	

Description du test

Test standard	EPA	
Run #	3	
Date	04-10-2023	
Technicien	M.M	
Project #	PI 20294	

Description de l'unité

Manufacturer	HEARTHSTONE	
Modèle	8024	
Combustion system	Cat	
Appliance type	WOOD STOVE	
Firebox volume	2,17	cu ft.
Appliance weight empty	n.a	lbs
Appliance weight full	n.a	lbs

Paramètres du test

Logging time	1	min
Manufacturer's rated heat output	n.a	BTU/h Donnée fournie par le manfacturier
Targeted category	2	
Targeted output	n.a	BTU/h
Cp steel	n.a	BTU/lb-°F

Échantillonnage

Blank sampling rate	0,20	cuft/min
Internal probe diameter	0,18	in.
Calibration Factor (DGM #1):	0,994	
Equipment number (DGM #1):	EM 178	Dimensionless
Calibration Factor (DGM #2):	0,995	
Equipment number (DGM #2):	EM 318	Dimensionless
Calibration Factor (DGM #3):	0,998	
Equipment number (DGM #3):	EM 179	Dimensionless
Calibration Factor (DGM 1st Hr):	0,998	
Equipment number (DGM 1st Hr):	EM 130	Dimensionless

Tunnel

Targeted tunnel flow rate	350	scfm
Tunnel diameter	8	in.
Molecular weight	29	29 as per ASTM E2515
Pitot tube type	Standard	
Pitot tube coefficient	0,99	Dimensionless

Project nu.	PI 20294
Date	04-10-2023
Technicien	M.M

Fuel data

Fuel type	Cord	
Fuel specie	D. Fir	
HHV	19810,0	kJ/kg
%C	48,7	
%H	6,9	
%O	43,9	
%Ash	0,5	
HHV	8519,2	Btu/lb
LHV	7451,0	Btu/lb

Default Fuel Values

	D. Fir	Oak/Maple
HHV	19 810	19 887
%C	48,73	50
%H	6,87	6,6
%O	43,9	42,9
%Ash	0,5	0,5
HHV (Btu/lb)	8519	8552
LHV (Btu/lb)	7451	7480

	Start	End
Barometer (kPa):	101,6	101
Barometer (in.Hg):	30,002469	29,825288977
Dry Bulb (F):	73,4	78,1
Humidity (%):	66,2	66,8
Air velocity (ft/min)	0	0

DGM #1st hour	Final:	2609,140	cuft	Final:	2609,140	cuft
	Initial:	2597,010	cuft	Initial:	2597,010	cuft
DGM #1	Final:	30303,406	cuft	Final:	858096,880	Liter
	Initial:	30249,941	cuft	Initial:	856582,920	Liter
DGM #2	Final:	21427,085	cuft	Final:	606747,470	Liter
	Initial:	21370,922	cuft	Initial:	605157,120	Liter
DGM room	Final:	16587,373	cuft	Final:	469702,100	Liter
	Initial:	16545,543	cuft	Initial:	468517,580	Liter

Numéro de la ligne dans "Raw data" à partir duquel les données du VRAI test commencent: 216

Autres données à rentrer: dans preload data, load data, traverse et filter set weight

Project nu.	PI 20294
Date	04-10-2023
Technicien	M.M

Preload data sheet

Test Load Weight:

Lower	Ideal	Upper
13,67	15,19	16,71

Load Volume: 0,4314 cu. ft

Loading Density: 7,407 lbs./ft3

Number of Spaces:

Spacer weight (lbs):

Load Density (wet): 37,258 lbs./ft3

Dry Wood Density: 30,754991

Piece Size (in): Thick	Wide	x Length	Weight lbs	Meter Moisture Content Dry Uncorrected %					Ave. MC x Weight	Volume Cubic Inches
1,5	3,5	17,5	1,882	20	20,1	20,6	20,4	20,4	38,2046	91,88
1,5	3,5	17,5	1,914	19,1	19,6	19,8	19,9	19,8	37,59096	91,88
1,5	3,5	17,5	2,032	20	20	20,1	20	20,8	41,00576	91,88
1,5	3,5	17,5	2,008	21,1	21	21	21	21	42,20816	91,88
1,5	3,5	12	1,388	22	21	21,9	21,8	21	29,89752	63,00
1,5	3,5	12	1,412	22,1	22	21,8	21,5	21,7	30,80984	63,00
1,5	3,5	12	1,28	23	22	23,1	21,1	22,3	28,544	63,00
1,5	3,5	12	1,404	22,2	21,9	22,5	22,4	22,3	31,25304	63,00
1,5	3,5	12	1,396	21,9	22	21,8	21,9	21,8	30,54448	63,00
1,5	3,5	12	1,358	22	22,1	22	21,9	21,8	29,82168	63,00
										0,00
										0,00
										0

FUEL LOAD DATA SHEET, CSA B415

Test Load Weight:

Lower	Ideal	Upper
13,7	15,2	16,7

* For boilers, a loading density factor of 10 lb/ft3 is applied

Load Volume: 0,41 cu. ft

Loading Density: 7,1 lbs./ft3

Number of Spaces: 16

Spacer weight: lbs

Load Density (wet): 33,7 lbs./ft3

Dry Wood Density: 28,0 lbs./ft3

Piece Size (in): Thick	Wide	Length	Weight lbs	Meter Moisture Content Dry Uncorrected %					Ave. MC x Weight	Volume Cubic Inches	Ave. MC %	
1,5	3,5	17,5	1,64	19,60	19,50	19,40	19,60	19,70	32,0784	91,88	19,6	
1,5	3,5	17,5	1,69	20,10	20,40	20,30	20,40	20,60	34,36768	91,88	20,4	
1,5	3,5	17,5	1,88	19,10	19,20	19,10	19,20	19,20	36,0208	91,88	19,2	
3,5	3,5	17,5	4,26	20,10	20,20	20,40	20,30	20,30	86,3076	214,38	20,3	
3,5	3,5	17,5	4,25	21,10	20,90	20,80	21,00	21,00	89,12192	214,38	21,0	Load
										0,00		
										0,00		
										0,00		
1,5	0,75	5	0,09			19,60			1,8424	5,63	19,6	
1,5	0,75	5	0,12			19,70			2,4034	5,63	19,7	
1,5	0,75	5	0,09			19,70			1,7336	5,63	19,7	
1,5	0,75	5	0,09			19,80			1,8612	5,63	19,8	
1,5	0,75	5	0,09			19,80			1,8612	5,63	19,8	
1,5	0,75	5	0,11			19,70			2,2064	5,63	19,7	
1,5	0,75	5	0,13			19,70			2,4822	5,63	19,7	
1,5	0,75	5	0,11			20,00			2,28	5,63	20,0	
1,5	0,75	5	0,11			20,10			2,211	5,63	20,1	
1,5	0,75	5	0,10			20,10			2,0502	5,63	20,1	
1,5	0,75	5	0,12			20,00			2,44	5,63	20,0	
1,5	0,75	5	0,10			20,00			1,92	5,63	20,0	
1,5	0,75	5	0,08			19,30			1,544	5,63	19,3	
1,5	0,75	5	0,09			19,40			1,7072	5,63	19,4	
1,5	0,75	5	0,09			19,30			1,6596	5,63	19,3	spacers
1,5	0,75	5	0,10			19,30			1,93	5,63	19,3	
										0,00		
										0,00		
										0,00		
										0,00		
										0,00		
										0,00		
										0,00		
										0,00		
										0,00		
										0,00		
										0,00		
										0,00		
										0,00		
										0,00		
								SUM MCx	310,029		19,8 %	

Test Load Weight: 15,35 lbs.

Dry Weight: 5,79 kg.

Average Moisture Content: %

Dry: 20,20 Dry(EPA) 20,20

Dry(B415 20,20

20,20

Must be 19-25

Wet: 16,81

must be 15,2-22

Coal Bed Range: 3,1 lbs. to 3,8 lbs.

TEST CHARGE:

Coal bed weight: 3,1 lbs.

Project nu.	PI 20294
Date	04-10-2023
Technicien	M.M

Tunnel Traverse Worksheet (for velocity calculations)

Static Pressure: 0,18 in. H20
Barometer: 29,900 in. Hg

Pour un tunnel de 12" et plus, prendre 6 lectures

	TUNNEL VELOCITY	TUNNEL TEMP	SQUARE ROOT
	In. wc	°F	
A center			0,0000
B center			0,0000
A1			0,0000
A2			0,0000
A3			0,0000
A4			0,0000
A5			0,0000
A6			0,0000
B1			0,0000
B2			0,0000
B3			0,0000
B4			0,0000
B5			0,0000
B6			0,0000
AVERAGE	#DIV/0!	#DIV/0!	0,0000

PITOT CONSTANT=
0,956

Pour un tunnel moins de 12", prendre 4 lectures

	TUNNEL VELOCITY	TUNNEL TEMP	SQUARE ROOT
	In. wc	°F	
A center	0,074	73,05	0,2720
B center	0,074	73,13	0,2720
A1	0,060	73,05	0,2449
A2	0,074	73,02	0,2720
A3	0,072	73,02	0,2683
A4	0,060	73	0,2449
B1	0,061	73,1	0,2470
B2	0,073	73,2	0,2702
B3	0,070	73,2	0,2646
B4	0,060	73,2	0,2449
AVERAGE	0,0678	73,1000	0,2601

Project nu.	PI 20294
Date	04-10-2023
Technicien	M.M

Filter set weight

	System 1 (g) 1st hour			System 1 (g)			System 2 (g)			Ambient blank (g)	Date	Heure	Test end date & time
	probe	front/ Back	gasket	probe	front/ Back	gasket	probe	front/ Back	gasket	Filter			
Number	002	15-16	13	06	17-18	37	30	19-20	40	21			
Before (1)													
Before (2)													
Before (3)													
Before (4)													
Before (5)	61,0979	0,2443	35,6204	61,3720	0,2445	35,2144	110,2140	0,2442	35,0120	0,1216	2023-10-03	17:00	
Before (6)	61,0978	0,2444	35,6205	61,3721	0,2446	35,2145	110,2139	0,2443	35,0120	0,1216	2023-10-04	09:00	
After (1)	61,0985	0,2446	35,6224	61,3722	0,2446	35,2161	110,2142	0,2445	35,0146	0,1217	2023-10-04	17:15	
After (2)	61,0978	0,2444	35,6219	61,3722	0,2446	35,2156	110,2139	0,2443	35,0136	0,1217	2023-10-10	08:00	
After (3)	61,0978	0,2444	35,6219	61,3722	0,2446	35,2156	110,2139	0,2443	35,0133	0,1217	2023-10-11	08:00	2023-10-04 16:45
After (4)	61,0978	0,2444	35,6219	61,3722	0,2446	35,2156	110,2139	0,2443	35,0133	0,1217	2023-10-12	09:00	
After (5)													
After (6)	61,0978	0,2444	35,6219	61,3722	0,2446	35,2156	110,2139	0,2443	35,0133	0,1217	2023-10-12	09:00	
Difference	0,0000	0,0000	0,0014	0,0001	0,0000	0,0011	0,0000	0,0000	0,0013	0,0001			
Total (mg)		1,4			1,2			1,3		0,1			
Total ajusté (mg)		**1,30**			**1,10**			**1,20**					

Project nu.	PI 20294
Date	04-10-2023
Technicien	M.M

Manufacturer: HEARTHSTONE
Model: 8024

Run: 3
Project #: PI 20264
Test Duration: 295 min

Note: In the "Input data", "Calc. % O_2", "Fuel Properties", and "Mass Balance" columns, [a], [b], [g], [k], [l], [c], [h], [d], [m], [j], and [k] refer to their respective variables in Clauses

	HHV	LHV
Eff	77,68%	82,70%
Comb Eff	99,50%	99,50%
HT Eff	77,97%	83,17%
Output	18 003	Btu/h
Burn Rate	1,17	lbs/h
Stated CO	93	lb
Input	23 234	Btu/h
HC ratio	15,81	

CO_{Lim} = Ultimate CO_2 19,04 %
β_c 1,202

Overall Heating Efficiency: 77,68%
Combustion Efficiency: 99,50%
Heat Transfer Efficiency: 77,97%

Heat Output: 17 978 Btu/h
Heat Input: 23 043 Btu/h
Burn Duration: 4,92 h
Burn Rate: 3,59 lb/h
Stack Temp: 312,8 Deg. F

				1,20	20,49	11,71	550,99	26,19	1,20	0,76	0,90
INPUT DATA				Oxygen Calculation			Input Data		Combustion	Heat	Net
Elapsed Time	Weight Remaining (kg)	% CO [c]	% CO_2 [d]	Excess Air EA	Total O_2	Calc. % O_2 [g]	Flue Gas (°C)	Room Temp (°C)	Eff %	Transfer %	Eff %
0,00	6,83	0,14	1,20	958,9%	20,91	19,90	180,0	26,0	99,0%	80,3%	80,5%
1,00	6,69	0,40	3,36	613,9%	20,75	18,20	182,5	24,7	99,0%	56,9%	51,1%
2,00	6,55	0,13	1,16	1403,4%	20,95	19,61	188,3	24,8	99,1%	38,3%	17,6%
3,00	6,40	0,07	1,48	1151,9%	20,94	19,30	182,5	24,8	99,0%	35,4%	35,3%
4,00	6,26	0,07	2,32	720,9%	20,78	18,42	186,1	24,8	99,0%	44,3%	44,2%
5,00	6,08	0,21	2,56	668,2%	20,75	18,06	188,9	24,7	99,0%	50,0%	49,8%
6,00	5,91	0,09	5,23	336,1%	20,39	13,12	183,1	24,7	99,0%	70,0%	70,2%
7,00	5,77	0,07	7,07	247,3%	20,43	12,51	180,3	24,8	99,1%	76,4%	76,2%
8,00	5,66	0,06	6,50	269,0%	20,51	13,08	179,0	24,8	99,0%	74,0%	74,0%
9,00	5,52	0,05	5,76	238,0%	20,50	14,79	177,5	24,8	100,0%	72,4%	72,4%
10,00	5,48	0,04	5,01	224,4%	20,54	14,51	175,8	24,8	100,1%	73,2%	73,3%
11,00	5,43	0,05	5,67	162,4%	20,50	13,80	175,4	24,7	100,0%	74,8%	74,8%
12,00	5,38	0,05	7,12	173,8%	20,47	13,32	176,3	24,8	99,9%	75,5%	75,5%
13,00	5,34	0,05	6,71	180,2%	20,49	13,75	177,8	24,8	99,9%	74,8%	74,8%
14,00	5,30	0,05	6,57	186,8%	20,50	13,91	177,8	24,9	100,0%	74,5%	74,5%
15,00	5,26	0,05	6,96	182,8%	20,48	13,51	178,5	25,0	99,9%	75,0%	75,0%
16,00	5,21	0,06	7,75	151,7%	20,43	12,65	180,5	24,8	99,9%	76,1%	76,1%
17,00	5,16	0,05	8,46	150,1%	20,38	11,87	182,5	24,9	99,9%	77,1%	77,1%
18,00	5,12	0,04	8,58	128,6%	20,37	11,79	182,3	24,9	100,0%	77,2%	77,2%
19,00	5,07	0,04	8,01	144,0%	20,41	12,30	183,5	24,9	100,0%	76,3%	76,3%
20,00	5,00	0,06	11,20	74,1%	20,20	8,66	185,5	24,9	99,9%	79,6%	79,3%
21,00	4,93	0,09	12,83	46,4%	20,05	6,93	188,3	25,0	99,9%	80,3%	77,4%
22,00	4,89	0,21	13,66	42,7%	20,03	6,37	193,1	25,0	99,9%	80,0%	76,7%
23,00	4,80	0,14	12,27	57,0%	20,11	7,72	194,3	25,1	99,9%	79,7%	76,6%
24,00	4,75	0,07	10,94	78,5%	20,21	9,14	194,0	25,0	99,7%	78,9%	76,6%
25,00	4,71	0,06	10,19	91,9%	20,26	10,05	193,6	25,2	99,9%	78,3%	76,1%
26,00	4,66	0,04	10,03	99,0%	20,27	10,22	194,1	25,0	100,0%	78,0%	77,9%
27,00	4,62	0,05	11,27	71,9%	20,19	8,78	195,1	25,1	99,9%	78,1%	76,5%
28,00	4,53	0,06	12,14	62,9%	20,13	7,98	196,4	25,1	99,9%	78,9%	76,4%
29,00	4,48	0,05	12,21	60,3%	20,13	7,90	197,2	25,1	99,9%	78,9%	76,4%
30,00	4,43	0,05	12,47	56,8%	20,11	7,61	198,1	25,1	99,9%	79,1%	76,6%
31,00	4,34	0,08	12,93	50,9%	20,08	7,11	199,8	25,2	99,9%	79,5%	76,8%
32,00	4,30	0,11	13,15	48,5%	20,06	6,87	200,7	25,2	99,9%	80,0%	76,9%
33,00	4,21	0,16	13,35	46,3%	20,05	6,71	201,3	25,3	99,9%	80,0%	76,7%
34,00	4,16	0,07	13,04	49,8%	20,07	7,00	201,3	25,3	99,7%	79,9%	76,7%
35,00	4,13	0,04	12,41	57,8%	20,12	7,69	200,5	25,2	99,9%	79,5%	76,4%
36,00	4,07	0,04	12,41	57,8%	20,12	7,69	199,8	25,2	99,9%	79,5%	76,5%
37,00	4,00	0,01	12,37	58,3%	20,12	7,73	199,4	25,3	100,0%	79,6%	76,5%
38,00	4,04	0,03	12,39	58,4%	20,13	7,82	198,6	25,2	100,0%	79,6%	76,5%
39,00	4,00	0,03	12,10	63,8%	20,13	7,94	198,0	25,2	100,0%	79,5%	76,5%
40,00	4,89	0,03	12,10	63,8%	20,14	8,03	197,2	25,3	100,0%	79,5%	76,5%
41,00	4,80	0,02	12,15	61,3%	20,14	7,97	197,0	25,2	100,0%	79,6%	76,6%
42,00	4,71	0,02	12,40	58,3%	20,12	7,71	196,7	25,3	100,0%	79,6%	76,6%
43,00	4,66	0,03	11,46	71,0%	20,18	8,71	195,1	25,3	100,0%	79,2%	76,2%
44,00	4,62	0,02	10,70	83,2%	20,23	9,52	193,2	25,3	100,1%	78,7%	76,7%
45,00	4,52	0,02	10,48	87,2%	20,25	9,76	192,4	25,3	100,1%	78,6%	76,7%
46,00	4,57	0,02	10,42	88,2%	20,25	9,82	188,6	25,2	100,1%	78,7%	76,8%
47,00	4,48	0,03	10,55	85,7%	20,24	9,68	188,2	25,4	100,0%	78,8%	76,9%
48,00	4,44	0,03	11,21	74,7%	20,20	8,97	190,5	25,3	100,0%	79,3%	76,3%
49,00	4,39	0,04	12,20	59,8%	20,13	7,86	191,6	25,4	99,9%	80,0%	76,9%
50,00	4,35	0,06	12,64	54,5%	20,10	7,42	192,5	25,4	99,9%	80,2%	76,9%
51,00	4,30	0,04	12,69	54,3%	20,10	7,39	193,1	25,4	99,9%	80,2%	80,1%
52,00	4,26	0,04	12,87	52,1%	20,09	7,19	193,8	25,4	99,9%	80,2%	80,1%
53,00	4,18	0,05	12,95	51,1%	20,08	7,11	194,4	25,5	99,9%	80,3%	80,1%
54,00	4,13	0,04	12,97	51,1%	20,08	7,10	194,4	25,5	99,9%	80,3%	80,2%
55,00	4,07	0,03	12,82	53,7%	20,09	7,25	194,4	25,5	99,9%	80,2%	80,0%
56,00	4,03	0,04	12,66	55,6%	20,11	7,51	193,9	25,5	99,9%	80,0%	80,0%
57,00	3,98	0,04	12,29	59,3%	20,13	7,91	193,6	25,6	99,9%	79,9%	79,8%
58,00	3,94	0,03	12,13	61,6%	20,14	8,08	193,0	25,6	100,0%	79,9%	79,8%
59,00	3,89	0,02	12,03	63,3%	20,15	8,13	192,6	25,7	100,0%	79,8%	79,8%
60,00	3,85	0,02	11,88	65,5%	20,16	8,26	191,5	25,6	100,0%	79,7%	79,8%
61,00	3,80	0,02	11,73	67,1%	20,16	8,40	191,2	25,6	100,1%	79,7%	79,7%
62,00	3,76	0,02	11,63	68,6%	20,17	8,53	190,1	25,6	100,1%	79,7%	79,7%
63,00	3,71	0,02	11,63	68,5%	20,17	8,53	189,4	25,6	100,1%	79,7%	79,8%
64,00	3,66	0,02	11,64	68,5%	20,17	8,53	188,8	25,7	100,1%	79,7%	79,8%
65,00	3,62	0,02	11,65	68,3%	20,17	8,51	188,3	25,7	100,1%	79,7%	79,8%
66,00	3,57	0,02	11,78	66,4%	20,16	8,37	188,0	25,7	100,1%	79,8%	79,8%
67,00	3,53	0,02	11,99	64,0%	20,15	8,18	188,4	25,8	100,1%	80,0%	80,0%
68,00	3,50	0,02	12,03	63,5%	20,14	8,11	188,3	25,7	100,1%	80,0%	80,1%
69,00	3,44	0,02	12,14	61,9%	20,14	7,98	188,1	25,7	100,0%	80,1%	80,2%
70,00	3,39	0,03	12,33	59,5%	20,12	7,78	188,3	25,7	100,0%	80,2%	80,2%
71,00	3,35	0,03	12,49	56,8%	20,11	7,60	188,0	25,7	100,0%	80,3%	80,3%
72,00	3,30	0,04	12,62	55,2%	20,10	7,48	188,1	25,8	99,9%	80,4%	80,3%
73,00	3,26	0,04	12,77	53,5%	20,09	7,35	188,4	25,7	99,9%	80,4%	80,4%
74,00	3,21	0,06	12,90	50,9%	20,08	7,09	190,0	25,8	99,9%	80,5%	80,3%
75,00	3,16	0,06	13,11	48,7%	20,07	6,93	190,4	25,8	99,9%	80,6%	80,4%
76,00	3,12	0,06	13,15	48,7%	20,07	6,98	190,7	25,9	99,9%	80,5%	80,4%
77,00	3,07	0,07	12,97	52,7%	20,08	7,08	190,2	25,8	99,7%	80,5%	80,3%
78,00	3,03	0,05	12,79	53,0%	20,09	7,18	190,0	25,7	99,9%	80,6%	80,3%
79,00	2,98	0,03	12,51	56,6%	20,11	7,39	189,3	25,8	99,9%	80,3%	80,3%
80,00	2,94	0,03	12,23	60,3%	20,13	7,68	188,5	25,8	100,0%	80,2%	80,2%
81,00	2,90	0,02	11,92	64,6%	20,15	8,03	188,1	25,9	100,1%	80,0%	80,0%
82,00	2,87	0,02	11,78	66,4%	20,16	8,17	187,6	25,8	100,1%	79,9%	80,0%
83,00	2,83	0,02	11,75	66,9%	20,16	8,40	186,4	25,9	100,1%	80,0%	80,0%
84,00	2,80	0,02	11,71	67,5%	20,17	8,45	186,0	25,7	100,1%	80,0%	80,0%
85,00	2,76	0,02	11,66	69,2%	20,18	8,61	185,3	26,1	100,1%	79,9%	80,0%
86,00	2,71	0,02	11,45	71,9%	20,18	8,72	184,3	26,0	100,1%	79,9%	80,0%
87,00	2,67	0,02	11,42	71,9%	20,19	8,76	183,6	25,9	100,1%	79,9%	80,0%
88,00	2,62	0,02	11,36	72,7%	20,19	8,82	183,3	25,8	100,1%	79,9%	80,0%
89,00	2,62	0,02	11,26	73,7%	20,19	8,88	182,1	25,7	100,1%	79,9%	80,0%
90,00	2,57	0,01	11,20	74,5%	20,19	8,91	181,9	25,9	100,1%	80,0%	80,1%
91,00	2,53	0,01	11,26	74,3%	20,20	8,93	180,5	25,9	100,1%	80,0%	80,1%
92,00	2,48	0,01	12,09	62,8%	20,14	8,09	180,2	26,0	100,1%	80,0%	80,0%

93,00	2,48	0,02	11,52	70,2%	20,18	8,65	179,9	26,0	100,1%	80,2%	80,3%
94,00	2,44	0,01	11,39	72,2%	20,19	8,79	179,6	25,9	100,1%	80,2%	80,3%
95,00	2,39	0,01	11,35	72,8%	20,19	8,83	179,1	26,1	100,1%	80,2%	80,3%
96,00	2,35	0,01	11,29	73,7%	20,19	8,89	178,8	25,9	100,1%	80,2%	80,3%
97,00	2,35	0,01	11,26	74,2%	20,20	8,93	178,1	26,1	100,1%	80,2%	80,3%
98,00	2,30	0,01	11,32	73,2%	20,19	8,86	177,7	26,1	100,1%	80,3%	80,4%
99,00	2,26	0,02	11,57	69,5%	20,17	8,60	177,5	25,9	100,1%	80,4%	80,5%
100,00	2,21	0,04	13,46	45,3%	20,05	6,55	179,1	26,1	99,9%	81,5%	81,4%
101,00	2,17	0,11	14,05	38,5%	20,00	5,67	181,3	26,0	99,5%	81,6%	81,2%
102,00	2,17	0,09	12,30	57,5%	20,12	7,69	181,1	26,0	99,5%	80,7%	80,4%
103,00	2,12	0,08	12,14	60,7%	20,13	7,95	180,8	26,0	99,6%	80,6%	80,3%
104,00	2,08	0,06	12,04	62,3%	20,14	8,07	180,6	26,2	99,8%	80,5%	80,4%
105,00	2,08	0,05	12,05	62,2%	20,14	8,08	180,1	26,2	99,9%	80,6%	80,5%
106,00	2,03	0,04	12,15	61,2%	20,13	7,96	180,3	26,2	99,9%	80,6%	80,6%
107,00	1,98	0,04	12,17	60,9%	20,13	7,94	180,1	26,3	99,9%	80,7%	80,6%
108,00	1,94	0,05	12,31	58,9%	20,12	7,79	180,3	26,3	99,8%	80,7%	80,6%
109,00	1,94	0,08	13,18	48,1%	20,05	6,84	180,4	26,4	99,5%	81,2%	80,9%
110,00	1,89	0,14	13,71	41,9%	20,03	6,25	181,8	26,1	99,3%	81,4%	80,8%
111,00	1,85	0,08	13,00	49,5%	20,07	6,97	181,5	26,4	99,7%	81,1%	80,8%
112,00	1,80	0,05	12,50	56,5%	20,11	7,59	181,4	26,1	99,9%	80,8%	80,7%
113,00	1,80	0,03	12,03	62,9%	20,14	8,10	180,8	26,0	100,0%	80,5%	80,5%
114,00	1,76	0,03	11,93	64,3%	20,15	8,21	180,5	26,2	100,0%	80,6%	80,5%
115,00	1,75	0,03	12,16	61,1%	20,14	7,96	180,0	26,2	100,0%	80,7%	80,7%
116,00	1,71	0,02	11,71	67,3%	20,18	8,44	179,4	26,0	100,0%	80,4%	80,4%
117,00	1,71	0,03	11,09	76,7%	20,21	9,10	179,0	26,1	100,0%	80,1%	80,1%
118,00	1,67	0,03	11,22	74,5%	20,20	8,96	177,3	26,1	100,0%	80,2%	80,2%
119,00	1,62	0,04	11,27	73,7%	20,19	8,91	176,3	26,4	99,9%	80,3%	80,3%
120,00	1,62	0,04	11,14	75,6%	20,20	9,04	175,6	26,3	99,9%	80,3%	80,2%
121,00	1,58	0,05	10,79	81,2%	20,22	9,41	175,1	26,3	99,9%	80,0%	79,9%
122,00	1,58	0,05	10,62	84,2%	20,24	9,59	173,9	26,4	99,9%	80,0%	79,9%
123,00	1,58	0,04	10,28	90,3%	20,26	9,96	172,7	26,2	99,9%	79,8%	79,7%
124,00	1,53	0,04	10,08	94,2%	20,27	10,17	170,8	26,0	100,0%	79,7%	79,7%
125,00	1,53	0,03	9,66	102,7%	20,30	10,63	168,8	26,4	100,0%	79,5%	79,6%
126,00	1,49	0,03	9,50	106,0%	20,31	10,79	166,7	26,4	100,0%	79,5%	79,6%
127,00	1,49	0,03	9,43	107,5%	20,32	10,87	165,1	26,4	100,1%	79,5%	79,7%
128,00	1,49	0,03	9,37	108,9%	20,32	10,93	163,2	26,5	100,1%	79,7%	79,8%
129,00	1,44	0,03	9,19	113,0%	20,33	11,13	161,5	26,0	100,1%	79,6%	79,7%
130,00	1,44	0,03	8,94	118,9%	20,35	11,39	160,3	26,2	100,1%	79,5%	79,5%
131,00	1,44	0,03	8,76	123,4%	20,36	11,58	159,1	26,2	100,1%	79,4%	79,4%
132,00	1,39	0,03	8,67	125,7%	20,37	11,68	157,6	26,2	100,1%	79,4%	79,5%
133,00	1,39	0,03	8,61	127,2%	20,37	11,74	156,6	26,3	100,1%	79,4%	79,5%
134,00	1,39	0,03	8,60	127,5%	20,37	11,75	155,4	26,2	100,1%	79,5%	79,6%
135,00	1,39	0,03	8,60	127,6%	20,37	11,76	153,9	26,3	100,1%	79,7%	79,7%
136,00	1,35	0,03	8,60	127,5%	20,37	11,76	153,0	26,1	100,1%	79,7%	79,8%
137,00	1,35	0,03	8,58	128,1%	20,37	11,78	152,1	26,2	100,1%	79,8%	79,9%
138,00	1,35	0,03	8,60	127,5%	20,37	11,75	151,0	26,2	100,1%	79,9%	80,0%
139,00	1,35	0,03	8,60	127,7%	20,37	11,76	149,8	26,4	100,1%	80,0%	80,1%
140,00	1,31	0,03	8,67	125,6%	20,37	11,67	148,7	26,3	100,1%	80,2%	80,2%
141,00	1,30	0,03	8,69	125,2%	20,36	11,66	147,7	26,1	100,1%	80,2%	80,3%
142,00	1,29	0,03	8,69	125,4%	20,36	11,66	146,8	26,2	100,1%	80,3%	80,4%
143,00	1,30	0,03	8,58	128,1%	20,37	11,77	146,1	26,3	100,1%	80,3%	80,4%
144,00	1,30	0,03	8,53	129,0%	20,37	11,83	145,2	26,1	100,1%	80,3%	80,4%
145,00	1,26	0,03	8,58	128,1%	20,37	11,78	144,3	26,2	100,1%	80,4%	80,5%
146,00	1,26	0,03	8,57	128,3%	20,37	11,78	143,9	26,3	100,1%	80,5%	80,5%
147,00	1,26	0,03	8,56	128,5%	20,37	11,79	143,1	26,1	100,1%	80,5%	80,5%
148,00	1,21	0,03	8,52	129,4%	20,37	11,83	142,5	26,2	100,1%	80,6%	80,6%
149,00	1,21	0,03	8,60	127,7%	20,37	11,76	141,9	26,4	100,1%	80,6%	80,7%
150,00	1,21	0,03	8,61	127,3%	20,37	11,74	141,1	26,3	100,1%	80,7%	80,8%
151,00	1,21	0,03	8,61	127,2%	20,37	11,74	140,4	26,2	100,1%	80,8%	80,8%
152,00	1,21	0,03	8,69	125,1%	20,36	11,65	139,9	26,2	100,1%	80,9%	80,9%
153,00	1,17	0,03	8,74	124,0%	20,36	11,61	139,6	26,0	100,1%	80,9%	81,0%
154,00	1,17	0,03	8,81	122,0%	20,36	11,53	139,5	26,0	100,1%	81,0%	81,0%
155,00	1,17	0,04	8,88	120,0%	20,35	11,47	139,3	26,2	100,0%	81,1%	81,1%
156,00	1,17	0,04	8,88	120,4%	20,35	11,46	138,8	26,3	100,0%	81,1%	81,1%
157,00	1,17	0,04	8,88	120,2%	20,35	11,45	138,4	26,2	100,0%	81,2%	81,2%
158,00	1,12	0,04	8,88	120,0%	20,35	11,47	138,0	26,3	100,0%	81,2%	81,2%
159,00	1,12	0,04	8,88	120,0%	20,35	11,47	137,7	26,2	100,0%	81,2%	81,2%
160,00	1,12	0,04	8,83	121,0%	20,35	11,51	137,6	26,3	100,0%	81,2%	81,2%
161,00	1,08	0,04	8,83	121,3%	20,35	11,51	137,4	26,1	100,0%	81,2%	81,2%
162,00	1,10	0,04	8,82	121,6%	20,35	11,51	137,2	26,3	100,0%	81,2%	81,2%
163,00	1,08	0,04	8,78	122,8%	20,36	11,56	137,1	26,4	100,0%	81,2%	81,2%
164,00	1,08	0,04	8,81	121,9%	20,36	11,53	136,4	26,4	100,0%	81,3%	81,2%
165,00	1,08	0,04	8,82	121,8%	20,36	11,52	136,1	26,5	100,0%	81,3%	81,3%
166,00	1,03	0,04	8,79	122,5%	20,36	11,55	136,1	26,3	100,0%	81,3%	81,2%
167,00	1,03	0,04	8,83	121,3%	20,35	11,51	135,5	26,3	100,0%	81,3%	81,3%
168,00	1,03	0,04	8,53	129,2%	20,37	11,82	135,2	26,4	100,0%	81,1%	81,1%
169,00	1,03	0,04	8,31	135,2%	20,39	12,06	134,8	26,2	100,0%	80,9%	81,2%
170,00	1,03	0,04	8,29	135,9%	20,39	12,08	134,7	26,2	100,0%	80,9%	80,9%
171,00	1,03	0,04	8,26	136,7%	20,39	12,11	134,3	26,2	100,0%	80,9%	80,9%
172,00	0,99	0,04	8,25	137,0%	20,39	12,12	133,9	26,4	100,0%	81,0%	81,2%
173,00	0,99	0,04	8,27	136,4%	20,39	12,10	133,2	26,3	100,0%	81,0%	81,1%
174,00	0,99	0,04	8,27	136,3%	20,39	12,10	133,1	26,4	100,0%	81,0%	81,0%
175,00	0,96	0,04	8,27	136,5%	20,39	12,11	132,9	26,6	100,0%	81,1%	81,1%
176,00	0,99	0,04	8,22	137,7%	20,39	12,15	132,6	26,3	100,0%	81,0%	81,0%
177,00	0,94	0,04	8,25	136,8%	20,39	12,12	132,2	26,2	100,0%	81,1%	81,1%
178,00	0,94	0,04	8,26	136,4%	20,39	12,11	132,1	26,4	100,0%	81,1%	81,1%
179,00	0,94	0,04	8,24	137,2%	20,39	12,13	131,8	26,3	100,0%	81,1%	81,1%
180,00	0,94	0,05	8,30	135,5%	20,39	12,07	131,6	26,3	100,0%	81,2%	81,1%
181,00	0,93	0,05	8,33	134,3%	20,39	12,03	131,6	26,3	100,0%	81,2%	81,2%
182,00	0,90	0,04	8,37	133,5%	20,38	11,99	131,6	26,2	100,0%	81,2%	81,2%
183,00	0,90	0,04	8,39	133,1%	20,38	11,98	131,4	26,3	100,0%	81,3%	81,3%
184,00	0,90	0,04	8,29	135,9%	20,39	12,08	131,2	26,6	100,0%	81,2%	81,2%
185,00	0,90	0,05	7,99	147,3%	20,42	12,50	131,4	26,4	99,9%	80,8%	80,8%
186,00	0,88	0,05	7,99	147,2%	20,42	12,50	131,2	26,5	99,9%	80,9%	80,8%
187,00	0,90	0,05	7,99	147,3%	20,42	12,50	131,1	26,4	99,9%	80,9%	80,8%
188,00	0,85	0,05	7,94	145,8%	20,41	12,45	131,0	26,5	99,9%	80,9%	80,9%
189,00	0,85	0,05	7,98	144,7%	20,41	12,41	131,1	26,6	99,9%	81,0%	80,9%
190,00	0,85	0,05	8,01	143,8%	20,41	12,38	130,8	26,4	99,9%	81,0%	80,9%
191,00	0,80	0,05	8,02	143,5%	20,41	12,36	130,7	26,5	99,9%	81,0%	81,0%
192,00	0,80	0,05	8,04	142,8%	20,41	12,34	130,5	26,6	99,9%	81,1%	81,0%
193,00	0,80	0,05	8,09	141,4%	20,40	12,29	130,3	26,7	99,9%	81,1%	81,1%
194,00	0,80	0,05	8,14	139,9%	20,40	12,23	130,0	26,4	99,9%	81,2%	81,1%
195,00	0,80	0,05	8,12	140,3%	20,40	12,25	130,0	26,4	99,9%	81,2%	81,1%
196,00	0,80	0,05	8,16	139,4%	20,40	12,22	130,0	26,6	99,9%	81,2%	81,1%
197,00	0,76	0,05	8,19	138,5%	20,40	12,18	129,8	26,5	99,9%	81,2%	81,2%
198,00	0,76	0,05	8,16	139,3%	20,40	12,22	130,0	26,4	99,9%	81,2%	81,1%
199,00	0,76	0,05	8,16	139,3%	20,40	12,22	130,1	26,7	99,9%	81,2%	81,1%
200,00	0,76	0,05	8,16	139,3%	20,40	12,21	130,1	26,5	99,9%	81,2%	81,1%
201,00	0,76	0,05	8,16	139,3%	20,40	12,22	130,1	26,5	99,9%	81,2%	81,1%
202,00	0,71	0,06	8,12	140,3%	20,40	12,25	129,9	26,5	99,9%	81,2%	81,1%
203,00	0,71	0,06	8,14	139,7%	20,40	12,23	130,2	26,6	99,9%	81,2%	81,1%
204,00	0,71	0,06	8,16	139,1%	20,40	12,21	130,1	26,6	99,9%	81,2%	81,1%
205,00	0,71	0,06	8,06	142,1%	20,40	12,32	130,3	26,6	99,9%	81,1%	81,0%
206,00	0,71	0,06	8,04	142,6%	20,41	12,34	130,1	26,4	99,9%	81,1%	81,0%

207,00	0,71	0,06	7,97	144,6%	20,41	13,41	130,0	26,5	99,8%	81,0%	80,9%
208,00	0,69	0,06	8,03	142,9%	20,41	13,35	130,4	26,6	99,8%	81,1%	80,9%
209,00	0,71	0,06	7,98	143,9%	20,41	13,39	130,2	26,4	99,8%	81,0%	80,9%
210,00	0,69	0,06	8,03	142,7%	20,41	13,35	130,7	26,5	99,8%	81,0%	80,9%
211,00	0,67	0,07	8,04	142,3%	20,40	13,33	130,8	26,4	99,8%	81,0%	80,9%
212,00	0,67	0,07	8,04	142,3%	20,40	13,33	130,9	26,7	99,8%	81,0%	80,9%
213,00	0,69	0,06	8,10	140,7%	20,40	13,37	130,6	26,5	99,8%	81,1%	80,9%
214,00	0,62	0,07	8,10	138,9%	20,40	13,21	131,0	26,8	99,8%	81,1%	80,9%
215,00	0,62	0,07	8,12	139,9%	20,40	13,24	131,3	26,8	99,8%	81,1%	80,9%
216,00	0,62	0,07	8,14	139,3%	20,40	13,22	131,3	26,7	99,8%	81,1%	80,9%
217,00	0,62	0,07	8,09	140,8%	20,40	13,26	131,4	26,8	99,8%	81,0%	80,9%
218,00	0,62	0,07	8,11	140,2%	20,40	13,26	131,6	26,9	99,8%	81,0%	80,9%
219,00	0,59	0,07	8,08	141,6%	20,40	13,31	131,6	26,8	99,8%	81,0%	80,9%
220,00	0,58	0,07	8,07	141,3%	20,40	13,29	131,5	26,9	99,7%	81,0%	80,9%
221,00	0,59	0,07	7,76	150,9%	20,40	13,53	131,6	26,9	99,7%	80,7%	80,9%
222,00	0,58	0,07	7,67	153,9%	20,40	13,73	131,6	26,9	99,8%	80,6%	80,4%
223,00	0,58	0,07	7,66	157,9%	20,44	12,85	131,5	26,8	99,8%	80,3%	80,3%
224,00	0,58	0,06	7,61	158,6%	20,44	12,87	131,5	26,8	99,8%	80,3%	80,3%
225,00	0,53	0,06	7,57	157,5%	20,44	12,84	131,5	26,7	99,8%	80,3%	80,3%
226,00	0,53	0,06	7,57	157,5%	20,44	12,84	130,9	26,8	99,8%	80,3%	80,4%
227,00	0,53	0,06	7,58	157,0%	20,44	12,82	130,8	26,5	99,8%	80,3%	80,4%
228,00	0,53	0,06	7,67	154,2%	20,43	12,73	130,5	26,6	99,8%	80,7%	80,5%
229,00	0,53	0,06	7,60	156,3%	20,43	12,81	130,4	26,6	99,8%	80,5%	80,5%
230,00	0,53	0,06	7,56	157,0%	20,44	12,82	130,3	26,7	99,8%	80,3%	80,5%
231,00	0,49	0,06	7,55	158,2%	20,44	12,85	130,3	26,9	99,8%	80,3%	80,5%
232,00	0,49	0,06	7,54	158,5%	20,44	12,87	129,8	26,8	99,8%	80,3%	80,5%
233,00	0,49	0,06	7,54	158,5%	20,44	12,87	130,0	27,0	99,8%	80,3%	80,5%
234,00	0,49	0,06	7,52	159,1%	20,44	12,89	129,6	26,9	99,8%	80,3%	80,4%
235,00	0,48	0,06	7,52	159,1%	20,44	12,89	129,7	26,8	99,8%	80,3%	80,4%
236,00	0,44	0,07	7,52	159,1%	20,44	12,89	129,4	26,8	99,8%	80,3%	80,4%
237,00	0,44	0,07	7,52	159,5%	20,44	12,91	129,5	26,7	99,8%	80,3%	80,4%
238,00	0,44	0,07	7,52	159,5%	20,44	12,91	129,5	27,0	99,8%	80,3%	80,4%
239,00	0,44	0,07	7,51	159,1%	20,44	12,89	129,4	26,8	99,8%	80,3%	80,4%
240,00	0,44	0,07	7,48	160,1%	20,44	12,92	129,5	26,8	99,7%	80,3%	80,4%
241,00	0,43	0,07	7,47	160,5%	20,44	12,94	129,9	26,9	99,8%	80,3%	80,4%
242,00	0,43	0,07	7,42	162,0%	20,43	12,99	129,9	26,7	99,7%	80,0%	80,4%
243,00	0,43	0,07	7,37	163,7%	20,43	13,13	129,9	26,9	99,7%	80,4%	80,2%
244,00	0,43	0,07	7,32	165,0%	20,43	13,13	129,7	27,0	99,7%	80,3%	80,3%
245,00	0,43	0,07	7,37	164,2%	20,43	13,03	129,6	26,7	99,8%	80,3%	80,3%
246,00	0,43	0,07	7,38	163,9%	20,43	13,03	129,3	26,9	99,8%	80,3%	80,4%
247,00	0,35	0,07	7,39	163,6%	20,43	13,03	129,1	26,9	99,8%	80,3%	80,4%
248,00	0,35	0,07	7,38	163,9%	20,43	13,03	129,0	26,8	99,8%	80,3%	80,4%
249,00	0,35	0,07	7,36	163,3%	20,43	13,03	129,1	26,8	99,7%	80,3%	80,4%
250,00	0,35	0,07	7,30	165,3%	20,43	13,11	127,9	26,7	99,7%	80,3%	80,3%
251,00	0,35	0,07	7,29	165,9%	20,43	13,13	127,9	26,8	99,7%	80,3%	80,3%
252,00	0,35	0,07	7,25	166,1%	20,43	13,17	128,1	26,9	99,7%	80,3%	80,2%
253,00	0,35	0,07	7,24	166,8%	20,43	13,19	128,1	26,8	99,7%	80,4%	80,2%
254,00	0,34	0,07	7,17	171,1%	20,43	13,33	128,3	27,0	99,7%	80,4%	80,1%
255,00	0,30	0,07	7,16	171,7%	20,43	13,37	128,3	26,8	99,7%	80,3%	80,1%
256,00	0,30	0,07	7,09	174,3%	20,47	13,34	128,3	26,8	99,7%	80,3%	80,0%
257,00	0,30	0,07	7,08	173,4%	20,47	13,37	128,1	26,8	99,7%	80,2%	80,0%
258,00	0,26	0,07	7,06	174,2%	20,47	13,34	127,9	27,0	99,7%	80,3%	80,1%
259,00	0,26	0,07	7,12	173,0%	20,46	13,31	127,7	26,9	99,7%	80,4%	80,1%
260,00	0,26	0,07	7,11	173,6%	20,47	13,32	127,3	26,9	99,7%	80,4%	80,1%
261,00	0,26	0,07	7,08	174,7%	20,47	13,35	127,3	26,8	99,7%	80,3%	80,1%
262,00	0,26	0,07	7,06	175,3%	20,47	13,37	127,6	27,2	99,7%	80,3%	80,0%
263,00	0,26	0,07	7,06	175,3%	20,47	13,37	127,4	27,0	99,7%	80,3%	80,0%
264,00	0,26	0,08	7,03	176,0%	20,47	13,41	127,6	26,7	99,6%	80,2%	79,9%
265,00	0,24	0,08	6,98	177,3%	20,47	13,44	127,6	26,8	99,6%	80,2%	79,9%
266,00	0,22	0,08	7,01	177,1%	20,47	13,43	128,0	27,0	99,6%	80,2%	79,9%
267,00	0,22	0,08	6,98	178,0%	20,47	13,46	127,7	27,2	99,6%	80,2%	79,8%
268,00	0,22	0,08	6,98	178,3%	20,47	13,46	127,6	27,3	99,6%	80,2%	79,8%
269,00	0,22	0,08	6,96	178,9%	20,48	13,47	127,8	26,9	99,6%	80,1%	79,8%
270,00	0,21	0,08	6,96	178,6%	20,48	13,46	127,8	26,9	99,6%	80,1%	79,8%
271,00	0,22	0,08	6,94	179,0%	20,48	13,48	128,0	27,3	99,6%	80,1%	79,8%
272,00	0,19	0,09	6,91	180,0%	20,48	13,53	128,2	27,1	99,6%	80,1%	79,7%
273,00	0,17	0,09	6,91	180,7%	20,48	13,52	128,4	27,3	99,6%	80,0%	79,7%
274,00	0,17	0,09	6,90	182,1%	20,48	13,56	128,4	27,3	99,6%	80,0%	79,6%
275,00	0,17	0,09	6,90	182,0%	20,48	13,57	128,5	27,2	99,6%	80,0%	79,6%
276,00	0,12	0,09	7,09	173,7%	20,47	13,33	128,5	27,2	99,6%	80,2%	79,8%
277,00	0,17	0,09	7,07	174,3%	20,47	13,35	128,5	27,1	99,6%	80,2%	79,8%
278,00	0,12	0,09	6,96	177,6%	20,47	13,44	128,5	27,3	99,6%	80,1%	79,8%
279,00	0,12	0,09	6,96	177,6%	20,47	13,44	128,4	27,4	99,6%	80,2%	79,8%
280,00	0,12	0,09	6,97	178,2%	20,47	13,46	128,5	27,4	99,6%	80,1%	79,8%
281,00	0,12	0,09	6,96	178,1%	20,47	13,45	128,5	27,3	99,6%	80,1%	79,8%
282,00	0,12	0,08	6,96	178,3%	20,47	13,46	128,1	27,3	99,6%	80,2%	79,8%
283,00	0,12	0,08	6,94	178,8%	20,48	13,50	128,1	27,2	99,6%	80,1%	79,8%
284,00	0,08	0,08	6,91	181,1%	20,48	13,53	127,7	27,1	99,6%	80,1%	79,8%
285,00	0,08	0,08	6,90	182,1%	20,48	13,56	127,5	27,2	99,6%	80,1%	79,8%
286,00	0,08	0,08	6,89	182,8%	20,48	13,60	127,2	27,2	99,6%	80,1%	79,8%
287,00	0,08	0,08	6,90	182,9%	20,48	13,59	127,2	27,3	99,6%	80,1%	79,8%
288,00	0,08	0,08	6,90	183,0%	20,48	13,59	127,3	27,3	99,6%	80,1%	79,8%
289,00	0,03	0,08	6,90	182,9%	20,48	13,59	127,3	27,3	99,6%	80,1%	79,7%
290,00	0,03	0,08	6,90	182,3%	20,48	13,56	127,3	27,1	99,6%	80,1%	79,7%
291,00	0,03	0,08	6,90	183,5%	20,48	13,60	127,3	27,3	99,6%	80,0%	79,7%
292,00	0,03	0,08	6,75	188,9%	20,48	13,69	127,0	27,4	99,6%	80,0%	79,7%
293,00	0,03	0,08	6,73	188,2%	20,48	13,72	127,2	27,3	99,6%	80,0%	79,6%
294,00	0,03	0,08	6,71	188,8%	20,48	13,73	127,2	27,3	99,6%	79,9%	79,5%
295,00	0,02	0,09	6,70	189,6%	20,48	13,75	127,0	27,4	99,6%	79,9%	79,5%

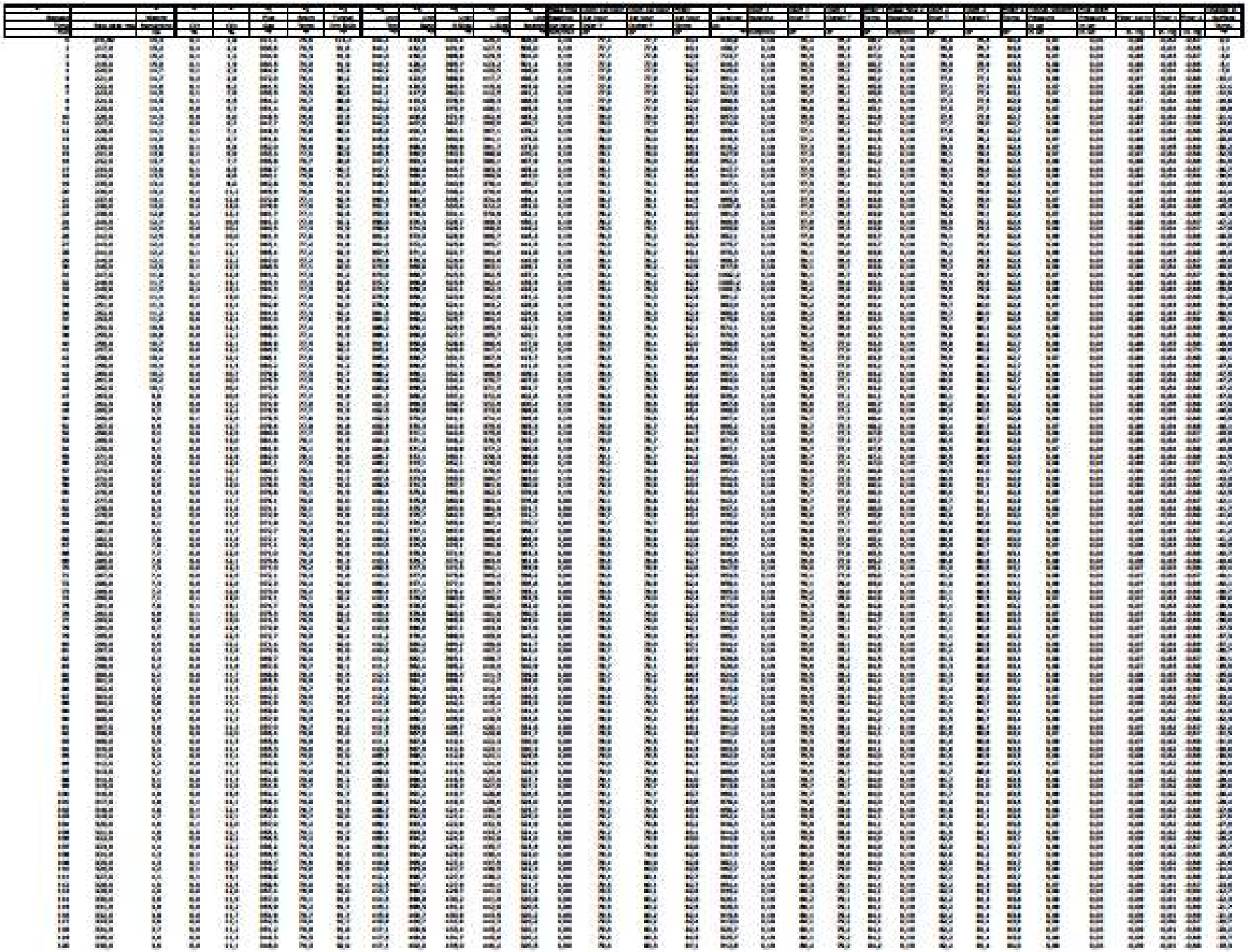

SFBA EPA EMISSION RESULTS

Test Duration: **295** min

PRESSURE FACTOR:	DGM 1st hr	0,970	
	DGM 1	0,977	
	DGM 2	0,975	
	DGM 3	1,000	
TEMPERATURE FACTORS	DGM 1st hr	0,981	
	DGM 1	0,978	
	DGM 2	0,974	
	DGM 3	0,979	
VOLUMES SAMPLED	DGM 1st hr	11,518	SCft
	DGM 1	50,762	SCft
	DGM 2	53,045	SCft
	DGM 3	40,884	SCft

TOTAL TUNNEL VOLUME : 103124

SAMPLE RATIOS

Sample Train 1st Hr:	1820,9
Sample Train 1:	2031,5
Sample Train 2:	1944,1

Paticulate concentration

Sample Train 1st Hr	**0,000122**	g/dscf
Sample Train 1	**0,000024**	g/dscf
Sample Train 2	**0,000025**	g/dscf
Room	**0,000002**	g/dscf

TOTAL EMISSIONS

Sample Train 1st Hr	**2,50**	g
Sample Train 1	**2,19**	g
Sample Train 2	**2,28**	g

EMISSION RATES

Sample Train 1st Hr	**2,50**	g/hr
Sample Train 1	**0,44**	g/hr
Sample Train 2	**0,46**	g/hr

	Train 1	Train 2	Train 1st Hr
Cs	2,364E-05	2,4508E-05	0,0001215

RESULTS

Average emission rate: 0,45 g/hr

Burn Rate : 1,18 Dry kg/hr

BAROMETRIC PRESSURE

Average:	29,91387874	In Hg
Start:	30,00246871	In Hg
End:	29,82528877	In Hg

DGM VALUES

DGM 1st hr	Final:	2609,140	Cuft
	Initial:	2597,010	Cuft
DGM 1	Final:	30303,406	Cuft
	Initial:	30249,941	Cuft
DGM 2	Final:	21427,085	Cuft
	Initial:	21370,922	Cuft
DGM #3	Final:	16587,373	Cuft
	Initial:	16545,543	Cuft

TEMPERATURES

DGM 1st hr	538,359	°R
DGM 1	539,963	°R
DGM 2	541,919	°R

CALIBRATION FACTORS

DGM 1st hr	0,9978
DGM 1	0,9936
DGM 2	0,9946
DGM #3	0,9982

TUNNEL FLOW RATE: 349,6 Dscfm

PARTICULATE CATCH

Total Sample Train 1:	1,20	mg
Total Sample Train 2:	1,30	mg
Total Sample Train 1 1st hour:	1,40	mg

DEVIATION: 2,01%

DATA 2023-10-04 EPA PI 20284 RUN 3 CAT 2
preburn / preload

Time	Flue	Room	Tunnel	Catalyst up	scale	Right	Back	bottom	Top	Left
acquisition	temp	temp	dry bulb							
minutes	°F	°F	°F	°F	lbs	°F	°F	°F	°F	°F
1	74,04	70,36	75,03	76,57	4,87	75,57	77,76	77,89	77,03	77,02
2	100,84	70,36	77,17	101,23	4,87	75,54	77,74	76,55	76,99	76,96
3	207,04	70,42	81,15	201,48	4,87	75,56	77,83	83,49	76,99	77,05
4	286,89	70,37	79,73	318,55	4,87	75,77	78,36	90,42	77,12	77,58
5	289,24	70,49	80,01	224,98	4,87	76,50	78,85	87,89	77,51	78,74
6	296,35	70,59	80,75	228,65	4,47	77,76	79,87	88,11	78,29	80,36
7	315,82	70,62	82,16	236,83	4,37	79,49	80,85	90,80	79,58	82,39
8	332,14	70,72	83,29	252,57	4,27	81,80	81,82	93,57	81,38	84,85
9	339,81	70,75	83,89	261,81	4,17	84,55	83,30	97,50	83,58	87,73
10	347,36	70,79	84,77	274,22	4,07	87,67	84,84	101,57	86,28	90,89
11	341,84	70,74	84,53	282,48	3,97	91,06	86,77	105,53	89,25	94,48
12	349,85	70,67	85,19	290,44	3,87	94,66	88,94	110,90	92,28	98,36
13	358,79	70,76	85,91	302,40	3,87	98,45	91,37	116,92	95,80	102,59
14	345,07	70,79	85,19	306,96	3,77	102,22	94,07	122,92	99,86	107,01
15	335,35	70,82	84,99	308,17	3,77	106,20	96,90	129,18	102,23	111,61
16	335,04	70,97	85,17	317,10	3,67	110,39	99,89	136,58	105,63	116,32
17	364,36	71,05	86,97	334,40	3,57	114,59	103,03	145,97	109,03	121,14
18	368,39	71,05	87,19	341,43	3,47	119,02	106,66	156,39	113,54	126,14
19	367,80	71,16	90,02	363,19	3,37	123,64	110,69	167,05	118,00	131,47
20	386,31	71,29	89,77	364,33	3,27	128,68	115,07	177,46	119,28	136,90
21	412,22	71,23	90,63	406,92	3,17	133,90	119,91	184,93	122,82	142,67
22	414,92	71,15	90,74	405,85	3,07	139,53	125,17	191,51	126,67	148,69
23	414,30	71,35	91,05	411,88	2,97	145,63	130,90	198,19	130,59	155,06
24	410,57	71,36	90,62	411,71	2,87	151,79	136,89	205,84	134,58	161,65
25	409,94	71,50	91,00	415,07	2,77	158,05	143,04	213,50	139,16	168,59
26	422,58	71,49	92,19	423,84	2,67	164,91	149,10	220,01	143,44	175,97
27	417,15	71,49	91,96	415,98	2,57	171,29	155,37	227,53	148,00	183,17
28	412,82	71,52	91,55	416,21	2,47	177,95	161,73	233,36	152,45	190,59
29	420,62	71,74	92,04	421,34	2,37	184,63	168,11	240,04	156,27	197,97
30	419,78	71,71	91,97	423,64	2,27	190,52	174,33	246,02	160,15	205,36
31	416,72	71,60	92,11	425,93	2,17	196,46	180,55	252,95	164,17	213,13
32	417,81	71,75	92,16	426,54	2,07	201,93	186,67	259,34	168,31	220,59
33	420,34	71,66	92,30	428,75	1,97	207,50	192,66	266,16	173,13	228,33
34	415,05	71,63	92,30	428,65	1,87	212,81	198,03	273,47	177,03	235,93
35	411,06	71,60	91,37	427,79	1,87	218,06	205,18	280,04	180,66	243,34
36	406,78	71,60	91,50	428,03	1,77	222,36	211,32	287,15	184,58	250,60
37	403,60	72,03	91,57	429,28	1,74	227,00	217,35	293,28	188,32	257,77
38	402,38	71,93	91,35	430,06	1,67	231,06	223,27	300,48	191,52	264,46
39	399,60	71,86	91,20	430,95	1,57	234,81	229,13	307,04	194,45	270,67
40	392,11	72,00	90,69	430,23	1,57	238,24	234,88	313,35	197,58	277,23
41	389,01	72,09	91,03	436,27	1,47	241,01	240,06	320,08	201,16	283,21
42	386,84	72,08	90,50	440,01	1,37	243,54	245,27	330,19	204,17	288,73
43	383,00	72,19	90,61	439,09	1,37	245,95	250,25	341,36	206,75	293,91
44	405,89	72,31	103,57	505,53	1,37	248,25	255,17	357,44	209,53	299,76
45	347,47	72,46	127,15	458,73	15,28	250,09	260,45	367,65	212,01	303,36
46	290,71	72,34	115,39	337,91	17,28	251,24	265,57	367,49	214,62	307,44
47	270,19	72,27	112,95	341,66	17,18	252,04	270,13	365,76	216,61	310,62
48	271,52	72,30	114,21	347,57	17,08	252,40	273,67	363,53	218,42	313,06
49	274,53	72,27	114,57	341,39	16,98	252,06	276,99	359,53	219,49	314,59
50	282,02	72,35	114,85	292,34	16,88	251,74	279,63	358,02	219,73	315,22
51	285,23	72,34	113,31	281,71	16,78	251,82	281,37	354,37	220,13	315,03
52	283,55	72,34	112,87	246,70	16,68	252,28	282,40	353,67	220,30	313,93
53	284,66	72,35	110,25	260,34	16,48	254,05	283,79	353,48	220,03	312,30
54	320,44	72,26	120,32	287,83	16,38	256,14	283,93	352,91	219,90	310,30
55	330,00	72,30	114,44	321,89	16,18	258,47	283,10	352,75	219,35	308,09
56	319,89	72,17	91,91	341,41	16,08	260,85	282,67	352,94	219,04	305,84
57	309,29	72,30	88,59	333,48	15,98	265,89	282,08	352,93	218,15	303,06
58	306,82	72,34	87,15	328,77	15,88	269,22	281,47	352,14	217,09	300,46
59	296,10	72,45	86,32	327,96	15,88	270,77	280,45	351,29	216,69	297,69
60	286,82	72,46	85,90	323,71	15,84	272,09	279,49	350,46	216,25	295,29
61	278,57	72,35	84,67	317,57	15,78	272,40	278,38	349,54	215,23	292,71
62	273,90	72,24	84,04	315,82	15,68	272,53	277,37	348,39	215,32	290,43
63	268,26	72,40	83,66	311,75	15,68	273,14	276,36	347,05	214,66	288,09
64	263,19	72,54	83,73	305,80	15,58	272,85	275,23	345,79	214,50	285,80
65	259,10	72,56	83,66	300,33	15,58	271,52	273,85	344,09	214,60	283,24
66	256,09	72,57	83,47	296,75	15,58	270,20	272,64	343,73	213,90	280,71
67	253,19	72,62	83,50	290,13	15,48	268,73	271,31	342,65	214,04	278,42
68	251,08	72,50	83,67	286,09	15,48	267,40	270,03	342,36	213,48	276,05
69	250,87	72,72	83,40	282,74	15,48	266,53	268,69	342,00	212,91	273,62
70	250,19	72,72	82,92	282,80	15,38	264,48	267,18	341,77	213,00	271,20
71	249,21	72,65	83,02	282,71	15,38	263,58	265,93	341,04	211,48	268,82
72	248,68	72,69	82,89	281,85	15,28	262,12	264,58	342,13	210,94	266,47
73	248,81	72,97	83,02	280,50	15,24	260,51	263,23	342,68	210,15	264,21
74	248,96	72,96	82,80	281,51	15,18	259,93	261,83	343,60	210,42	262,00
75	249,53	72,85	83,19	280,18	15,18	257,56	260,55	344,05	209,96	259,77
76	247,82	73,01	82,91	277,43	15,08	256,18	259,31	346,46	209,02	257,46
77	246,53	73,76	82,53	275,96	15,07	254,82	258,04	346,41	208,91	255,35
78	243,85	72,91	82,18	276,15	14,98	252,30	256,81	350,03	208,67	253,20
79	240,36	72,74	82,09	280,52	14,88	251,09	255,74	353,75	208,44	251,15
80	236,13	72,69	82,55	278,36	14,88	249,54	254,73	357,26	207,89	249,25
81	244,05	72,73	82,69	277,90	14,78	248,70	253,86	361,65	207,31	247,30
82	266,88	72,64	84,21	269,58	14,68	247,22	252,92	366,76	206,80	245,47
83	306,51	72,61	86,39	310,71	14,58	245,87	252,17	371,90	206,17	243,62
84	338,26	72,61	87,99	348,58	14,38	244,20	251,63	376,53	205,58	242,24
85	361,82	72,76	91,36	365,87	14,18	242,74	251,26	381,09	205,27	241,20
86	443,66	72,79	95,22	435,41	13,98	242,13	251,24	385,91	205,45	240,46
87	490,11	72,90	99,11	520,26	13,78	242,42	251,55	390,76	205,60	240,31
88	516,85	73,16	101,10	579,26	13,58	243,12	252,06	395,41	206,02	240,67

89	587,90	73,34	104,99	648,31	13,28	242,19	353,20	599,40	208,93	341,59
90	591,84	73,30	106,96	669,11	13,08	242,35	354,53	603,09	212,19	343,07
91	593,06	73,53	107,75	670,36	12,88	244,46	356,41	606,62	216,62	345,00
92	600,21	73,46	109,21	683,20	12,58	245,31	358,78	610,11	221,63	347,32
93	642,29	73,65	113,36	713,75	12,28	247,92	361,66	613,75	228,61	350,03
94	646,08	73,75	114,43	729,62	12,08	251,30	364,91	617,43	235,44	353,00
95	644,49	73,79	113,88	727,77	11,78	255,09	368,62	620,42	241,75	356,07
96	650,15	73,84	115,81	731,84	11,58	259,96	372,57	622,54	250,09	359,42
97	675,92	74,10	117,07	744,36	11,28	263,34	377,11	623,57	258,01	363,00
98	678,92	74,12	119,22	752,35	11,00	268,59	381,66	623,51	267,62	366,63
99	686,90	74,15	119,42	755,00	10,78	272,89	387,20	622,49	277,20	371,01
100	702,78	74,33	121,08	765,13	10,47	277,74	393,18	621,57	287,48	375,84
101	714,81	74,49	122,84	777,30	10,22	283,21	399,50	620,68	296,35	380,82
102	724,20	74,60	122,97	787,77	9,98	287,96	406,43	620,40	305,76	386,01
103	735,48	74,61	123,75	795,15	9,68	292,60	413,65	620,19	317,47	391,62
104	720,80	74,63	124,20	798,00	9,38	296,65	421,59	620,17	328,57	397,06
105	720,79	74,91	124,40	801,87	9,17	305,33	429,90	620,11	335,71	304,05
106	719,93	74,63	123,41	807,11	8,88	311,30	438,37	419,99	345,53	310,53
107	719,88	75,17	124,07	813,79	8,68	319,38	347,18	419,96	355,17	317,21
108	719,49	75,13	124,41	820,35	8,37	327,66	356,17	420,12	363,11	323,09
109	719,96	75,19	125,04	825,90	8,08	336,36	365,12	420,32	371,12	330,59
110	714,75	75,37	125,37	830,09	7,77	345,51	374,31	420,62	379,20	337,46
111	713,66	75,41	124,47	832,97	7,54	354,41	383,36	420,90	388,71	344,43
112	713,66	75,71	125,21	835,54	7,27	364,02	392,19	421,25	396,58	351,39
113	712,19	75,65	124,75	838,36	6,97	373,03	401,01	421,78	404,62	358,69
114	709,57	75,45	125,13	839,47	6,68	382,58	409,59	422,27	412,44	365,97
115	709,90	75,93	123,58	839,84	6,47	392,27	418,06	422,65	419,65	373,26
116	704,84	75,69	124,20	840,08	6,18	401,83	426,37	423,57	427,62	380,76
117	698,52	75,77	123,84	831,82	5,48	410,28	434,74	424,58	437,00	388,55
118	690,52	75,99	110,49	988,27	5,77	420,04	442,54	425,70	443,30	396,20
119	642,37	75,68	102,81	1039,83	5,57	428,71	449,96	425,96	445,04	403,14
120	613,70	75,68	100,10	1051,80	5,36	437,23	455,13	425,37	448,91	409,49
121	495,29	75,81	96,62	1060,52	5,27	445,30	459,44	424,23	453,11	415,89
122	478,25	75,94	97,45	1058,53	5,17	449,83	463,96	422,63	458,27	421,75
123	485,48	75,90	96,76	1035,59	5,07	453,80	466,90	420,78	459,41	427,23
124	454,89	75,79	95,82	1000,54	4,97	459,20	468,77	418,75	462,54	431,95
125	444,09	75,62	94,73	967,99	4,87	461,85	470,64	416,61	465,82	436,07
126	434,06	76,01	94,09	948,18	4,78	465,53	471,61	414,45	468,27	439,61
127	423,29	75,91	92,93	932,53	4,68	468,83	472,66	412,23	470,03	442,92
128	413,35	76,01	91,89	927,37	4,68	469,96	473,14	410,12	472,00	445,85
129	404,41	75,66	91,14	894,43	4,57	470,43	473,60	408,32	472,15	448,12
130	395,77	75,65	91,09	888,21	4,57	471,12	474,17	406,60	473,94	450,33
131	387,81	75,98	90,76	847,50	4,47	470,95	474,03	405,55	474,23	452,09
132	379,68	75,92	89,83	830,45	4,47	470,12	474,59	404,53	473,68	453,57
133	373,57	75,63	89,13	821,25	4,37	469,57	473,58	403,61	472,74	454,58
134	367,58	75,76	88,99	813,78	4,37	468,56	475,03	403,45	471,92	455,53
135	361,92	75,95	88,05	804,78	4,37	468,81	476,23	403,58	471,53	456,15
136	356,12	75,89	88,61	798,57	4,27	468,61	476,38	403,53	469,34	456,60
137	350,86	75,60	88,29	790,66	4,27	468,46	477,45	404,04	467,19	457,17
138	346,17	75,68	87,37	787,55	4,17	465,55	477,03	404,59	465,34	457,53
139	341,53	76,03	86,89	787,15	4,17	464,30	476,33	405,23	463,01	457,86
140	337,86	76,23	87,67	786,37	4,17	462,85	477,43	406,13	458,57	458,06
141	334,43	76,04	87,27	787,27	4,08	460,08	476,48	407,17	455,12	458,41
142	331,88	76,03	86,67	784,36	4,08	458,56	475,85	408,50	451,11	458,73
143	328,54	76,16	86,24	777,83	3,97	457,87	475,68	410,09	449,07	458,85
144	326,31	75,89	85,76	771,54	3,97	455,72	475,15	411,91	444,08	458,44
145	323,57	76,16	86,02	767,58	3,96	454,10	473,91	413,63	438,73	457,84
146	321,32	76,19	85,63	766,53	3,87	452,55	472,45	415,79	436,91	457,34
147	319,41	76,16	85,70	766,62	3,87	450,63	471,26	417,84	432,78	456,60
148	318,04	76,20	86,29	775,49	3,77	448,36	469,91	420,04	428,67	456,53
149	313,78	76,12	85,70	780,88	3,77	446,84	468,58	422,55	425,45	456,31
150	311,97	76,20	85,65	784,37	3,77	445,89	467,55	425,18	421,01	455,73
151	310,22	76,30	86,09	787,08	3,77	444,26	466,95	428,00	417,63	455,13
152	308,83	76,31	85,54	789,27	3,67	442,97	466,26	430,94	414,91	454,79
153	307,40	76,19	85,61	791,73	3,67	440,97	465,30	433,89	411,24	454,19
154	306,12	76,19	85,65	792,50	3,67	439,29	463,71	436,84	407,77	453,39
155	304,91	76,24	85,24	793,45	3,67	437,55	462,49	439,92	403,85	452,53
156	303,84	76,51	84,74	794,62	3,57	436,12	461,78	442,97	400,58	451,86
157	302,86	76,59	84,55	795,54	3,57	433,83	460,58	446,17	396,89	450,84
158	302,11	76,49	84,14	794,83	3,57	432,54	459,45	449,41	393,79	449,79
159	300,58	76,56	83,76	794,31	3,47	431,84	458,68	452,80	391,62	448,83
160	299,33	76,59	84,46	794,03	3,47	429,49	457,13	455,99	387,29	447,89
161	298,46	76,29	84,03	792,47	3,47	427,87	456,13	459,14	384,40	447,03
162	297,50	76,60	84,62	789,58	3,47	425,86	455,18	462,29	381,58	446,06
163	296,66	76,47	84,16	787,12	3,38	424,90	453,59	465,30	378,36	445,16
164	295,17	76,51	84,70	783,35	3,33	423,00	452,60	468,30	375,77	444,06
165	293,75	76,49	84,97	778,53	3,37	421,35	451,85	471,17	372,11	443,39
166	293,14	76,62	84,49	777,48	3,27	419,92	449,97	474,05	369,11	442,64
167	292,10	76,39	83,83	769,13	3,27	418,19	447,90	476,77	366,19	441,81
168	290,27	76,34	83,96	759,49	3,27	416,96	447,18	479,36	363,74	440,89
169	289,84	76,42	83,95	752,79	3,27	415,10	446,09	482,01	361,41	439,74
170	288,51	76,55	84,71	747,68	3,17	414,48	445,61	484,61	358,62	438,67
171	285,38	76,54	83,65	743,00	3,27	413,51	443,44	487,06	356,96	437,65
172	283,89	76,47	84,29	740,33	3,17	412,89	443,03	490,47	354,58	436,79
173	281,77	76,56	84,19	737,31	3,17	411,24	440,68	493,13	351,66	435,40
174	280,48	76,49	84,53	734,09	3,17	409,39	439,55	495,75	348,67	434,45
175	279,27	76,54	84,29	731,17	3,07	408,97	438,30	498,45	346,31	433,57
176	277,83	76,37	84,44	728,29	3,07	407,04	437,09	500,96	344,11	432,74
177	276,96	76,78	83,67	727,26	3,07	406,39	435,39	503,42	342,45	431,57
178	355,77	76,36	104,82	813,19	3,07	404,66	434,85	505,71	339,73	430,56

POLYTESTS
TESTING THROUGH YOUR REALITY

Date: 2023-10-04 Manufacturer: Hearthstone Model: 8024

Project #: pT ~~[illegible]~~ mm 20294 Run: 3 Tech: MM Reviewer: [illegible]

- kindling 500LBS Start Fire
- After 2 min close Door
- Fan off
- By pass open
- At 14LBS insert preload
- After 12 min close Door
- At 600LBS close air inlet (Space 3/8), close by pass and open Fan low
- At 31LBS open Door Rack coal Bed close Door
- After 2 min open Door, open by pass, insert load close by pass and close Door
- Fan off
- At 30 min open Fan low
- At 5 min close air inlet (Space 3/8)

TEST LOAD CONFIGURATION

POLYTESTS

PRE / POST CHECKS

Date: 2023-10-04 Manufacturer: Hearthstone Model: 8039

Project #: pE 20294 Run: 3 Tech: MM Reviewer: DP

Moisture Meter Calibration Check:

Equipment #	Time	12%	22%
EM 334	7100	ok	ok

Pre-Test Post-Test

Facility Conditions:

Air Velocity from less than 2 feet	0 (max50 Fpm)	0 (max50 Fpm)
Smoke Capture Check (tunnel velocity)	ok	NA
Picture	4 sides ok	ok

Wood Heater Conditions:

Date Wood Heater Stack Cleaned	2023-10-02
Date Dilution Tunnel Cleaned	2023-10-02
Induced Draft Check (min 0.005 H2O)	ok
Traverse before ignition	ok

Temperature System:

Ambient (65°-90°F)	ok °F

Proportional Checks:

Thermocouple check	Ok
Pitot Clean	ok
Pitot verification	ok
Pictures for report	

Side	Ok
Coal bed	ok
Load	ok
Load in stove	ok
Fuel adjustment	ok

Load Length 5/6 of firebox Length +- 1inch ok

POLYTESTS
TESTING THROUGH YOUR REALITY

Date: 2023-10-04 Manufacturer: Hearthstone Model: 8024

Project #: pI 20294 Run: 3 Tech: MM Reviewer: DO

Leakage Checks Tunnel Samplers

	System 1st hour		System 1		System 2		Ambient	
Unplugged Flow Rate = .25cfm	Pre-Test ASTM (-15) CSA B415 (-5)	Post-Test (Max test)	Pre-Test ASTM (-15) CSA B415 (-5)	Post-Test (Max test)	Pre-Test ASTM (-15) CSA B415 (-5)	Post-Test (Max test)	Pre-Test ASTM (-15) CSA B415 (-5)	Post-Test (Max test)
Vacuum (inches Hg.)	-10	-10	-10	-10	-10	-10	-10	-10
Final 1minute DGM (Liter)	2596.97	2609.24	856580.88	858097.82	605157.99	606749.80	468516.92	469702.80
Initial 1minute DGM (Liter)	2596.97	2609.24	856580.78	858097.72	605157.99	606749.80	468516.90	469702.80
Change (Liter)	Ø	Ø	0.10	0.10	Ø	Ø	0.02	0.02
Allowable leakage .04 x Sample rate or 0.28Lpm CSA B415 (0.56)								
Check OK	ok	ok	ok	ok	ok	ok	ok	ok

POLYTESTS

Date: 2023-10-~~03~~ 04 Manufacturer: Hearthstone Model: 8024

Project #: PT 20294 Run: 3 Tech: MM Reviewer: DP

Leakage Checks Flue Gas Sampler

Plugged Probe	Pre-Test	Post Test
Vacuum (inches Hg.)	-5	-5
Rotameter Reading (mml/min.)	0	0
Flow Rate (lpm)	1.5	1.5
Allowable (.02 x Sample Rate)	30	30
Check OK	ok	ok

Leakage Checks Pitot

Plugged Probe	Pre-Test 3 H2o static	Pre-Test 0.4-0.5 H2o velocity	Post Test 3 H2o Static	Post Test 0.4-0.5 H2o velocity
Vacuum (inches Hg.)	3	.4	3	.4
Check OK (no change after 15 sec.)	ok	ok	ok	ok

POLYTESTS
TESTING THROUGH YOUR REALITY

Date: 2023-10-09 Manufacturer: Hearthstone Model: 8024

Project #: pr 6199 Run: 3 Tech: MP Reviewer: DP

Scale Type	Audit		Measured Weight
	Equipment #	Weight	
Platform	Em 090	44 lbs, Class F	44 lbs
Platform	Em 205	10,00 Kg, Class F	10,00 Kg
Wood	Em 090	44 lbs, Class F	44 lbs
Analytical	Em 335	100 mg, Class S	100 mg
Analytical	Em 129	200 g, Class S	200 g

LIMITS OF WEIGHT RANGES

ANALYTICAL SCALE: .....50%-150% of dry filter weight, ± 0.1 mg
PLATFORM SCALE ..... 20%-80% of ideal test load weight, ± 0.1 lbs or 1%
WOOD SCALE..... 20%-80% of ideal test load weight, ± 0.01 lbs or 1%

POLYTESTS
TESTING THROUGH YOUR REALITY

CONTINUOUS ANALYZERS

Date: 2023-10-04 Manufacturer: Hearthstone Model: 8024

Project #: PI 20 L94 Run: 3 Tech: MM Reviewer: DP

FOR TUNNELS < 12 in

Barometric pressure (P_{bar}) 101.6 (KPa.) Static pressure (P_s) _____ (inches w.c.)
Inside diameter: Port A _____ Port B _____
Tunnel cross sectional area: .1963Ft^2
Pitot tube type: Standard

Traverse Point	Position (inches)			Velocity Head Δ_v (inches H_2O)	Tunnel Temperature (°F)
Tunnel diameter	6 po	7 po	8 po		
A- Centroid	3.00	3.50	4	0.074	73.05
B - Centroid	3.00	3.50	4	0.074	73.13
A-1	0.40	0.50	0.50	0.060	73.05
A-2	1.50	1.75	2	0.074	73.02
A-3	4.50	5.25	6	0.072	73.02
A-4	5.60	6.5	7.5	0.060	73.00
B-1	0.40	0.50	0.50	0.061	73.13
B-2	1.50	1.75	2	0.073	73.21
B-3	4.50	5.25	6	0.070	73.21
B-4	5.60	6.5	7.5	0.060	73.18
				AVERAGE	

POLYTESTS

CONTINUOUS ANALYZERS

Date: _____ Manufacturer: _____ Model: _____

Project #: _____ Run: _____ Tech: _____ Reviewer: _____

FOR TUNNELS 12 in

Barometric pressure (P_{bar}) _____ (KPa.) Static pressure (P_g) _____ (inches w.c.)
Pitot tube type: Standard

Traverse Point	Position (inches)	Velocity Head Δ_p (inches H_2O)	Tunnel Temperature (°F)
A Center	6		
B Center	6		
A-1	0.53		
A-2	1.75		
A-3	3.55		
A-4	8.45		
A-5	10.25		
A-6	11.47		
B-1	0.53		
B-2	1.75		
B-3	3.55		
B-4	8.45		
B-5	10.25		
B-6	11.47		

N/A

POLYTESTS
TESTING THROUGH YOUR REALITY

CONTINUOUS ANALYZERS

Date: 2023-10-04 Manufacturer: Hearthstone Model: 8024

Project #: PI 20294 Run: 3 Tech: MM Reviewer: DP

Pre-Test (Adjust and Record)

	ZERO		SPAN		CAL. (Record Only)	
CO	0	0	3.030	3.000	1.018	1.000
Tolerance CO	0	+/- 0.02	0.030	+/- 0.15	0.018	+/- 0.05
CO_2	0	0	17.98	18.00	9.83	10.00
Tolerance CO2	0	+/- 0.02	0.02	+/- 0.5	0.17	+/- 0.5
O_2 informative CSA B415 calculated value	na	na	na	na	na	na
	Actual	Should Be	Actual	Should Be	Actual	Should Be

Post Test (Record Only)

	Zero	Span	Cal.	Zero Drift	Limit	Span Drift	Limit	Cal. Drift	Limit	OK?	Not OK*
CO	0	3.028	1.009	0	0.02	0.002	0.15	0.009	0.05	✓	
CO_2	0	17.99	9.83	0	0.02	0.01	0.5	0.04	0.5	✓	

POLYTESTS
TESTING THROUGH YOUR REALITY

TEST DATA LOG

Date: 2023-10-04 Manufacturer: Hearthstone Model: 8024

Project #: [illegible] Run: 3 Tech: MP Reviewer: DO

RAW DRY GAS METER READINGS

		System 1ère hour	System 1	System 2	Blank
Test	Final (Liter)	2609.14	858096.88	606 747.47	469 703.10
	Initial (Liter)	2597.01	856 582.92	605 157.12	468 519.58

AMBIENT CONDITIONS

	Before	After
Barometer (kPa):	101.6	101.0
Dry Bulb (F):	73.4	78.1
Humidity (%):	66.2	66.8

POLYTESTS
TESTING THROUGH YOUR REALITY

FUEL DATA

Date: 2023-10-04 Manufacturer: Hearthstone Model: 8024

Project #: pI 20294 Run: 3 Tech: MM Reviewer: DP

FUEL DESCRIPTION:

Type of wood:

PRE-TEST LOAD

Piece Size	Weight		Meter Moisture Content (% dry) *				
1 1/2 x 3 1/2 x 17.5 in.	1882	lbs.	20°	20°	20°	20°	20°
1 1/2 x 3 1/2 x 17.5 in.	1914	lbs.	19°	19°	19°	19°	19°
1 1/2 x 3 1/2 x 17.5 in.	2032	lbs.	20°	20°	20°	20°	20°
1 1/2 x 3 1/2 x 17.5 in.	2008	lbs.	21°	21°	21°	21°	21°
1 1/2 x 3 1/2 x 12 in.	1388	lbs.	22°	21°	21°	21°	21°
1 1/2 x 3 1/2 x 12 in.	1412	lbs.	22°	22°	21°	21°	21°
1 1/2 x 3 1/2 x 12 in.	1280	lbs.	23°	22°	23°	21°	22°
1 1/2 x 3 1/2 x 12 in.	1404	lbs.	22°	21°	22°	22°	22°
1 1/2 x 3 1/2 x 12 in.	1396	lbs.	21°	22°	21°	21°	21°
1 1/2 x 3 1/2 x 12 in.	1358	lbs.	22°	22°	22°	21°	21°
x x in.		lbs.					
x x in.		lbs.					
x x in.		lbs.					
x x in.		lbs.					
x x in.		lbs.					
x x in.		lbs.					
x x in.		lbs.					
x x in.		lbs.					
x x in.		lbs.					
x x in.		lbs.					
x x in.		lbs.					
x x in.		lbs.					
x x in.		lbs.					

TEST LOAD WEIGHT: 16 07 lbs

POLYTESTS

FUEL DATA

Date: 2023-10-04 Manufacturer: Hearthstone Model: 8034

Project #: ~~p2200496~~ pt 20240 Run: 3 Tech: MM Reviewer: DP

FUEL DESCRIPTION:

Type of wood:

TEST LOAD

Piece Size	Weight	Meter Moisture Content (% dry)*				
1 ¼ x 3¼ x 13" in.	1640 lbs.	19.6	19.5	19.4	19.6	19.7
1 ¼ x 3¼ x 13" in.	1688 lbs.	20.2	20.4	20.3	20.4	20.6
1 ¼ x 3¼ x 13" in.	1880 lbs.	19.1	19.2	19.1	19.2	19.2
3 ¼ x 3¼ x 13" in.	4240 lbs.	20.1	20.2	20.4	20.3	20.2
3 ¼ x 3¼ x 13" in.	4252 lbs.	20.1	20.9	20.8	21.0	21.0
x x in.	lbs.					
1 ¼ x ¾ x in.	0094 lbs.			19.6		
1 ¼ x ¾ x in.	0122 lbs.			19.2		
1 ¼ x ¾ x in.	0088 lbs.			19.2		
1 ¼ x ¾ x in.	0094 lbs.			19.8		
1 ¼ x ¾ x in.	0094 lbs.			19.8		
1 ¼ x ¾ x in.	0112 lbs.			19.2		
1 ¼ x ¾ x in.	0126 lbs.			19.2		
1 ¼ x ¾ x in.	0114 lbs.			20.0		
1 ¼ x ¾ x in.	0110 lbs.			20.1		
1 ¼ x ¾ x in.	0102 lbs.			20.1		
1 ¼ x ¾ x in.	0122 lbs.			20.0		
1 ¼ x ¾ x in.	0096 lbs.			20.0		
1 ¼ x ¾ x in.	0080 lbs.			19.2		
1 ¼ x ¾ x in.	0078 lbs.			19.4		
1 ¼ x ¾ x in.	0086 lbs.			19.2		
1 ¼ x ¾ x in.	0100 lbs.			19.3		
x x in.	lbs.					
x x in.	lbs.					
x x in.	lbs.					
x x in.	lbs.					
x x in.	lbs.					

TEST LOAD WEIGHT: 1535 lbs Min 20%: 307 Max 25%: 384

POLYTESTS
TESTING THROUGH YOUR REALITY

DILUTION TUNNEL PARTICULATE SAMPLER DATA

Date: 2023-10-~~03~~ 10-03 MM
Manufacturer: Hearthstone
Model: 8024
Project #: PI 20299
Run: 3
Tech: MM
Reviewer: DP

Pre-test Weight Record		TEST FILTERS					
		SYSTEM 1st hour			SYSTEM 1		
Date	Time	Probe & Housing Number	Front & Back Filter Number	gaskets	Probe & Housing Number	Front & Back Filter Number	gaskets
		002	-15-16	13	006	17-18	37
2023-10-03	17:00	61 0979	0 2443	35 6204	61 3720	0 2445	35 2144
2023-10-09	9:00	61 0978	0 2444	35 6205	61 3721	0 2446	35 2145

Post-test Weight Record		TEST FILTERS					
		SYSTEM 1st hour			SYSTEM 1		
Date	Time	Probe & Housing Number	Front & Back Filter Number	gaskets	Probe & Housing Number	Front & Back Filter Number	gaskets
		002	15-16	13	006	17-18	37
2023-10-04	17:15	61 0985	~~0 2444~~ 0 2446	35 6224	61 3722	0 2446	35 2161
2023-10-10	8:30	61 0978	0 2444	35 6219	61 3722	0 2446	35 2156
2023-10-11	8:00	61 0978	0 2444	35 6219	61 3722	0 2446	35 2156
2023-10-12	9:00	61 0978	0 2444	35 6219	61 3722	0 2446	35 2156

POLYTESTS
TESTING THROUGH YOUR REALITY

DILUTION TUNNEL PARTICULATE SAMPLER DATA

Date: 2023-10-04 Manufacturer: Hearth glow C Model: 8624

Project #: pI 2. 294 Run: 3 Tech: MS Reviewer: DO

Pre-test Weight Record		TEST FILTERS – SYSTEM 2			
		Probe & Housing Number	Front & Back Filter Number	gaskets	Blank Filter
Date	Time	30	19- 20	40	21
2023 10-03	12:30	110 2134	0,2442	35 0120	0 1216
2023. 10-04	9:30	110 2139	0 2443	35 01 20	0 1216

Post-test Weight Record		TEST FILTERS – SYSTEM 2				
		Probe & Housing Number	Front & Back Filter Number	gaskets	Blank Filter	End test time and date
Date	Time	30	19 20	40	21	2023- 10- 04
2023-10-04	12:15	110 2142	~~19-20-22~~ 0,2445	35 0196	0 1217	16:45
2023 10-10	8:30	110 2139	0 2443	35 0136	0 1217	
2023. 10-11	8:30	110 2139	0 2443	35 0133	0 1217	
2023. 10-12	9:00	110 2139	0 2443	35 0133	0 1217	

Paramètres

Tous les facteurs de corrections et autres paramètres qui peuvent être modifiés par l'utilisateur du fichier sont regroupés ici.

Code verrouillage:	HEA

Description du test

Test standard	EPA
Run #	4
Date	05-10-2023
Technicien	M.M
Project #	PI 20294

Description de l'unité

Manufacturer	HEARTHSTONE	
Modèle	8024	
Combustion system	Cat	
Appliance type	WOOD STOVE	
Firebox volume	2,17	cu ft.
Appliance weight empty	n.a	lbs
Appliance weight full	n.a	lbs

Paramètres du test

Logging time	1	min
Manufacturer's rated heat output	n.a	BTU/h Donnée fournie par le manfacturier
Targeted category	3	
Targeted output	n.a	BTU/h
Cp steel	n.a	BTU/lb-°F

Échantillonnage

Blank sampling rate	0,20	cuft/min
Internal probe diameter	0,18	in.
Calibration Factor (DGM #1):	0,994	
Equipment number (DGM #1):	EM 178	Dimensionless
Calibration Factor (DGM #2):	0,995	
Equipment number (DGM #2):	EM 318	Dimensionless
Calibration Factor (DGM #3):	0,998	
Equipment number (DGM #3):	EM 179	Dimensionless
Calibration Factor (DGM 1st Hr):	0,998	
Equipment number (DGM 1st Hr):	EM 130	Dimensionless

Tunnel

Targeted tunnel flow rate	350	scfm
Tunnel diameter	8	in.
Molecular weight	29	29 as per ASTM E2515
Pitot tube type	Standard	
Pitot tube coefficient	0,99	Dimensionless

Project nu.	PI 20294
Date	05-10-2023
Technicien	M.M

Fuel data

Fuel type	Dimension	
Fuel specie	D. Fir	
HHV	19810,0	kJ/kg
%C	48,7	
%H	6,9	
%O	43,9	
%Ash	0,5	
HHV	8519,2	Btu/lb
LHV	7451,0	Btu/lb

Default Fuel Values

	D. Fir	Oak/Maple
HHV	19 810	19 887
%C	48,73	50
%H	6,87	6,6
%O	43,9	42,9
%Ash	0,5	0,5
HHV (Btu/lb)	8519	8552
LHV (Btu/lb)	7451	7480

	Start	End
Barometer (kPa):	101,4	101
Barometer (in.Hg):	29,943409	29,825288977
Dry Bulb (F):	75,8	83,6
Humidity (%):	63,4	48,3
Air velocity (ft/min)	0	0

DGM #1st hour	Final:	2621,580	cuft	Final:	2621,580	cuft
	Initial:	2609,440	cuft	Initial:	2609,440	cuft
DGM #1	Final:	30344,544	cuft	Final:	859261,780	Liter
	Initial:	30303,503	cuft	Initial:	858099,640	Liter
DGM #2	Final:	21470,279	cuft	Final:	607970,590	Liter
	Initial:	21427,221	cuft	Initial:	606751,310	Liter
DGM room	Final:	16619,418	cuft	Final:	470609,510	Liter
	Initial:	16587,444	cuft	Initial:	469704,100	Liter

Numéro de la ligne dans "Raw data" à partir duquel les données du VRAI test commencent: 224

Autres données à rentrer: dans preload data, load data, traverse et filter set weight

Project nu.	PI 20294
Date	05-10-2023
Technicien	M.M

Preload data sheet

Test Load Weight:

Lower	Ideal	Upper
13,67	15,19	16,71

Load Volume: 0,4314 cu. ft

Loading Density: 7,530 lbs./ft3

Number of Spaces:

Spacer weight (lbs):

Load Density (wet): 37,875 lbs./ft3

Dry Wood Density: 31,390741

Piece Size (in): Thick	Wide	x Length	Weight lbs	Meter Moisture Content Dry Uncorrected %					Ave. MC x Weight	Volume Cubic Inches
1,5	3,5	17,5	2,044	20,4	20,3	20,2	20,8	20,8	41,902	91,88
1,5	3,5	17,5	2,076	20,7	21	21,1	21,2	21,2	43,67904	91,88
1,5	3,5	17,5	1,976	19,9	20	20,1	20,3	20,4	39,79664	91,88
1,5	3,5	17,5	1,938	21	21,1	21,3	21,8	21,8	41,4732	91,88
1,5	3,5	12	1,318	21,3	21,4	21,8	21	21,1	28,09976	63,00
1,5	3,5	12	1,33	21,3	21,3	21,4	21,3	21,3	28,3556	63,00
1,5	3,5	12	1,164	20,8	20,8	20,9	20,7	20,6	24,16464	63,00
1,5	3,5	12	1,634	20,7	20,9	21	21	21	34,18328	63,00
1,5	3,5	12	1,372	19,9	19,8	19,8	19,8	19,7	27,1656	63,00
1,5	3,5	12	1,488	19,3	19,3	19,2	19,3	19,3	28,68864	63,00
										0,00
										0,00
										0,00
										0,00
										0,00
										0,00
										0,00
										0,00
										0,00
										0,00
										0,00
										0,00
										0,00
										0,00
										0,00
										0,00
										0,00
										0,00
										0,00
										0,00
										0,00
										0,00
										0,00
										0,00
										0,00
								SUM MC	337,5084	

PreTest Load Weight: 16,34 lbs.

Dry Weight: 6,14 kg.

Average Moisture Content: %

Dry: 20,66

20,66

Must be 18-28

Wet: 17,12

must be 15,4-22

Project nu.	PI 20294
Date	05-10-2023
Technicien	M.M

FUEL LOAD DATA SHEET, CSA B415

Test Load Weight:

Lower	Ideal	Upper
13,7	15,2	16,7

* For boilers, a loading density factor of 10 lb/ft3 is applied

Load Volume: 0,41 cu. ft

Loading Density: 7,2 lbs./ft3

Number of Spaces: 16

Spacer weight: lbs

Load Density (wet): 34,4 lbs./ft3

Dry Wood Density: 28,6 lbs./ft3

Piece Size (in): Thick	Wide	Length	Weight lbs	Meter Moisture Content Dry Uncorrected %					Ave. MC x Weight	Volume Cubic Inches	Ave. MC %	
1,5	3,5	17,5	1,87	19,10	19,30	19,20	19,90	19,30	36,16448	91,88	19,4	
1,5	3,5	17,5	1,89	20,50	20,30	20,10	20,40	20,40	38,48328	91,88	20,3	
1,5	3,5	17,5	1,69	19,10	19,20	19,80	19,70	19,80	32,94976	91,88	19,5	
3,5	3,5	17,5	4,27	20,30	20,20	20,70	20,60	20,60	87,40864	214,38	20,5	
3,5	3,5	17,5	4,29	19,20	19,80	19,90	19,70	19,80	84,34848	214,38	19,7	Load
										0,00		
										0,00		
										0,00		
1,5	0,75	5	0,08			19,10			1,528	5,63	19,1	
1,5	0,75	5	0,12			19,30			2,2774	5,63	19,3	
1,5	0,75	5	0,10			19,40			1,8624	5,63	19,4	
1,5	0,75	5	0,10			19,80			1,9404	5,63	19,8	
1,5	0,75	5	0,10			19,30			1,93	5,63	19,3	
1,5	0,75	5	0,12			19,80			2,2968	5,63	19,8	
1,5	0,75	5	0,10			19,90			1,9104	5,63	19,9	
1,5	0,75	5	0,09			19,30			1,6598	5,63	19,3	
1,5	0,75	5	0,09			19,40			1,8236	5,63	19,4	
1,5	0,75	5	0,09			19,70			1,7336	5,63	19,7	
1,5	0,75	5	0,09			19,80			1,8216	5,63	19,8	
1,5	0,75	5	0,11			19,90			2,189	5,63	19,9	
1,5	0,75	5	0,10			20,00			2,04	5,63	20,0	
1,5	0,75	5	0,11			20,10			2,2914	5,63	20,1	
1,5	0,75	5	0,08			20,00			1,6	5,63	20,0	spacers
1,5	0,75	5	0,10			19,90			1,99	5,63	19,9	
										0,00		
										0,00		
										0,00		
										0,00		
										0,00		
										0,00		
										0,00		
										0,00		
										0,00		
										0,00		
										0,00		
										0,00		
										0,00		
										0,00		
									SUM MCx 310,24904		19,7 %	

Test Load Weight: 15,57 lbs.

Dry Weight: 5,89 kg.

Average Moisture Content: %

Dry: 19,92 Dry(EPA) 19,92 Dry(B415 19,92

19,92 Must be 19-25

Wet: 16,61 must be 15,2-22

Coal Bed Range: 3,1 lbs. to 3,9 lbs.

TEST CHARGE:

Coal bed weight: 3,2 lbs.

Project nu.	PI 20294
Date	05-10-2023
Technicien	M.M

Tunnel Traverse Worksheet (for velocity calculations)

Static Pressure: 0,2 in. H20
Barometer: 29,900 in. Hg

Pour un tunnel de 12" et plus, prendre 6 lectures

	TUNNEL VELOCITY	TUNNEL TEMP	SQUARE ROOT
	In. wc	°F	
A center			0,0000
B center			0,0000
A1			0,0000
A2			0,0000
A3			0,0000
A4			0,0000
A5			0,0000
A6			0,0000
B1			0,0000
B2			0,0000
B3			0,0000
B4			0,0000
B5			0,0000
B6			0,0000
AVERAGE	#DIV/0!	#DIV/0!	0,0000

PITOT CONSTANT=
0,950

Pour un tunnel moins de 12", prendre 4 lectures

	TUNNEL VELOCITY	TUNNEL TEMP	SQUARE ROOT
	In. wc	°F	
A center	0,075	75,57	0,2739
B center	0,075	75,53	0,2739
A1	0,061	75,57	0,2470
A2	0,073	75,51	0,2702
A3	0,070	75,51	0,2646
A4	0,060	75,55	0,2449
B1	0,060	75,5	0,2449
B2	0,072	75,5	0,2683
B3	0,071	75,5	0,2665
B4	0,061	75,5	0,2470
AVERAGE	0,0678	75,5250	0,2601

Project nu.	PI 20294
Date	05-10-2023
Technicien	M.M

Filter set weight

	System 1 (g) 1st hour			System 1 (g)			System 2 (g)			Ambient blank (g)	Date	Heure	Test end date & time
	probe	front/ Back	gasket	probe	front/ Back	gasket	probe	front/ Back	gasket	Filter			
Number	31	24-25	28	21	22-23	5	42	26-27	42	28			
Before (1)													
Before (2)													
Before (3)													
Before (4)													
Before (5)	110,1276	0,2429	35,5602	108,7371	0,2441	35,4805	110,3114	0,2436	34,6109	0,1225	2023-10-04	17:00	
Before (6)	110,1277	0,2430	34,5603	108,7372	0,2442	35,4806	110,3115	0,2437	34,6110	0,1225	2023-10-05	09:00	
After (1)	110,1279	0,2432	34,5636	108,7374	0,2445	35,4829	110,3119	0,2439	34,6152	0,1228	2023-10-05	15:30	
After (2)	110,1278	0,2434	34,5612	108,7372	0,2444	35,4818	110,3116	0,2438	34,6120	0,1226	2023-10-10	08:00	
After (3)	110,1278	0,2430	34,5608	108,7372	0,2442	35,4818	110,3116	0,2438	34,6120	0,1226	2023-10-11	08:00	2023-10-05 15:00
After (4)	110,1278	0,2430	34,5608	108,7372	0,2442	35,4818	110,3116	0,2438	34,6120	0,1226	2023-10-12	09:00	
After (5)													
After (6)	110,1278	0,2430	34,5608	108,7372	0,2442	35,4818	110,3116	0,2438	34,6120	0,1226	2023-10-12	09:00	
Difference	0,0001	0,0000	0,0005	0,0000	0,0000	0,0012	0,0001	0,0001	0,0010	0,0001			
Total (mg)		0,6			1,2			1,2		0,1			
Total ajusté (mg)		**0,50**			**1,10**			**1,10**					

Project nu.	PI 20294
Date	05-10-2023
Technicien	M.M

Manufacturer: HEARTHSTONE
Model: 8024

Run: 4
Project #: PI 20264
Test Duration: 333 min

	HHV	LHV
Eff	77.71%	83.99%
Comb Eff	97.49%	97.49%
HT Eff	79.71%	86.13%
Output	24 512	8375
Burn Rate	1.28	lb/h
Stand. CO	208	lb
Input	31 564	9725
HC ash	15.81	
Average	0.07	10.26

Note: In the "Input data", "Calc. % O_2", "Fuel Properties", and "Mass Balance" columns, [a], [b], [g], [k], [l], [c], [h], [d], [m], [j], and [k] refer to their respective variables in Clauses

CO_{stub} Ultimate CO_2 19,04
β_c 1,002

Overall Heating Efficiency: 77,71%
Combustion Efficiency: 97,49%
Heat Transfer Efficiency: 79,71%

Heat Output: 23 352 Btu/h
Heat Input: 29 923 Btu/h
Burn Duration: 3,70 h
Burn Rate: 3,51 lb/h
Stack Temp: 800,4 Deg. F

				1,09	20,26	4,98	0:00:00	26,89	0,96	0,77	0,77
INPUT DATA				Oxygen Calculation			Input Data		Combust	Heat	Net
Elapsed Time	Weight Remaining (kg)	% CO [c]	% CO_2 [d]	Excess Air EA	Total O_2	Calc. % O_2 [a]	Flue Gas (°C)	Room Temp (°C)	Eff %	Transfer %	Eff %
0,00	7,29	0,05	0,09	1742,9%	20,87	19,06	170,8	26,8	91,9%	-1,9%	-1,9%
1,00	7,02	0,07	1,07	1388,9%	20,85	19,85	182,8	25,6	97,3%	14,1%	12,3%
2,00	7,02	0,06	3,00	465,3%	20,68	16,84	179,1	25,6	99,4%	64,2%	63,8%
3,00	6,98	0,04	5,66	231,7%	20,55	14,65	188,2	25,7	103,1%	71,5%	73,8%
4,00	6,96	0,04	8,37	153,5%	20,38	11,98	198,1	25,8	103,5%	75,5%	78,6%
5,00	28,08	0,05	11,69	99,8%	20,17	8,68	208,7	25,7	99,8%	78,5%	78,3%
6,00	6,78	0,12	10,73	81,1%	20,23	9,44	205,1	25,8	99,3%	77,9%	77,4%
7,00	6,70	0,08	7,46	161,8%	20,44	12,86	202,7	25,9	99,8%	73,8%	73,7%
8,00	6,66	0,08	8,46	135,0%	20,31	12,00	204,9	25,8	99,9%	76,7%	76,6%
9,00	6,57	0,02	13,26	42,5%	20,03	6,31	211,3	25,8	99,9%	79,6%	77,5%
10,00	6,52	0,00	12,95	48,2%	20,06	6,96	215,1	25,7	99,9%	79,0%	77,6%
11,00	6,39	0,24	13,40	43,6%	20,04	6,60	218,5	25,8	99,4%	79,1%	77,9%
12,00	6,34	0,13	11,36	70,7%	20,18	8,73	218,7	25,9	99,3%	77,6%	77,1%
13,00	6,30	0,08	8,18	113,7%	20,33	11,12	217,5	25,9	99,8%	75,3%	75,2%
14,00	6,21	0,04	10,57	85,0%	20,14	9,04	218,4	25,9	99,9%	78,9%	78,8%
15,00	6,16	0,04	10,45	87,3%	20,15	9,16	220,7	25,8	100,0%	78,8%	78,8%
16,00	6,07	0,10	12,39	53,8%	20,12	7,41	223,3	25,9	99,9%	78,3%	77,4%
17,00	6,02	0,10	12,34	57,8%	20,12	7,72	223,2	25,8	99,9%	78,0%	77,6%
18,00	5,93	0,14	12,43	56,4%	20,11	7,63	227,3	25,7	99,3%	78,0%	77,4%
19,00	5,84	0,10	12,85	51,8%	20,08	7,18	229,1	26,0	99,9%	78,2%	77,8%
20,00	5,80	0,08	12,62	54,9%	20,10	7,48	230,5	26,2	99,7%	78,0%	77,8%
21,00	5,71	0,08	13,08	37,8%	20,00	5,93	232,8	25,9	97,9%	78,8%	76,9%
22,00	5,66	0,16	13,55	43,3%	20,03	6,41	234,3	26,0	99,1%	78,4%	77,7%
23,00	5,57	0,16	13,99	38,0%	20,00	5,94	235,9	26,0	99,1%	78,0%	76,9%
24,00	5,48	0,15	13,51	44,3%	20,04	6,46	233,8	25,9	99,1%	78,3%	77,6%
25,00	5,43	0,07	13,22	47,8%	20,06	6,81	236,5	26,0	99,7%	78,1%	77,8%
26,00	5,34	0,06	13,26	47,4%	20,06	6,77	238,6	26,1	99,7%	78,1%	77,9%
27,00	5,30	0,14	13,72	41,8%	20,03	6,24	237,4	26,2	99,3%	78,3%	77,8%
28,00	5,21	0,12	13,62	42,9%	20,03	6,36	238,2	26,2	99,4%	78,2%	77,8%
29,00	5,13	0,08	14,01	31,0%	19,95	5,15	240,2	26,2	99,0%	78,7%	77,1%
30,00	5,05	0,10	14,51	32,4%	19,96	5,29	241,2	26,1	99,2%	78,6%	77,2%
31,00	4,98	0,01	14,68	30,1%	19,94	5,08	242,5	26,2	97,8%	78,6%	76,8%
32,00	4,89	0,04	14,75	29,4%	19,93	4,99	243,6	26,3	97,1%	78,5%	76,3%
33,00	4,80	0,03	14,86	27,8%	19,92	4,79	243,9	26,3	97,2%	78,6%	76,4%
34,00	4,70	0,09	14,74	29,8%	19,94	5,01	243,2	26,1	97,9%	78,6%	76,9%
35,00	4,60	0,21	14,95	23,3%	19,91	4,39	243,2	26,3	96,9%	78,8%	76,7%
36,00	4,52	0,01	15,09	20,9%	19,90	4,04	243,2	26,3	97,8%	78,8%	77,1%
37,00	4,43	0,07	14,88	27,3%	19,92	4,78	243,1	26,4	97,0%	78,6%	76,3%
38,00	4,44	0,13	15,42	21,6%	19,91	4,37	243,8	26,4	98,9%	79,0%	78,1%
39,00	4,35	0,12	15,26	25,6%	19,92	4,65	244,7	26,1	98,9%	78,9%	78,0%
40,00	4,30	0,24	15,51	24,7%	19,90	4,27	245,4	26,2	98,8%	79,0%	78,0%
41,00	4,21	0,10	15,68	20,7%	19,87	3,94	244,7	26,2	98,4%	78,9%	78,1%
42,00	4,16	0,09	15,41	19,8%	19,88	3,88	245,0	26,2	98,2%	78,7%	78,0%
43,00	4,07	1,01	15,67	17,7%	19,84	3,66	245,3	26,3	94,9%	78,9%	74,9%
44,00	4,03	0,78	15,59	19,9%	19,86	3,87	244,8	26,1	96,0%	78,9%	75,7%
45,00	3,94	0,87	15,44	20,4%	19,86	3,99	245,0	26,4	95,8%	78,8%	75,5%
46,00	3,85	0,78	15,64	19,8%	19,86	3,83	245,1	26,4	96,1%	78,9%	75,8%
47,00	3,80	0,91	15,65	18,8%	19,85	3,74	244,8	26,4	95,4%	78,9%	75,3%
48,00	3,74	0,79	15,72	19,0%	19,85	3,73	244,9	26,0	96,0%	79,0%	75,8%
49,00	3,68	0,81	15,66	19,3%	19,85	3,79	244,1	26,3	95,9%	79,0%	75,7%
50,00	3,57	0,88	15,61	19,3%	19,85	3,80	244,1	26,7	95,5%	78,9%	75,4%
51,00	3,48	1,00	15,70	18,3%	19,82	3,62	244,5	26,5	94,1%	78,9%	74,3%
52,00	3,44	1,01	15,72	18,4%	19,82	3,63	244,6	26,5	93,9%	78,9%	73,8%
53,00	3,35	1,03	15,60	18,9%	19,82	3,68	244,9	26,5	92,1%	78,7%	72,5%
54,00	3,30	1,72	15,88	13,5%	19,80	3,26	245,3	26,3	91,7%	78,9%	72,1%
55,00	3,21	1,69	15,93	13,9%	19,80	3,40	245,0	26,5	91,8%	78,9%	72,2%
56,00	3,13	1,70	15,94	14,0%	19,80	3,42	244,4	26,4	91,8%	78,9%	72,2%
57,00	3,07	1,72	15,99	14,2%	19,80	3,48	244,6	26,5	91,7%	78,8%	72,2%
58,00	3,03	1,67	15,98	14,6%	19,81	3,50	244,1	26,4	91,9%	78,8%	72,3%
59,00	2,98	1,57	15,93	15,5%	19,82	3,60	243,7	26,5	92,3%	78,7%	72,8%
60,00	2,89	1,47	15,91	16,4%	19,83	3,69	243,7	26,5	92,9%	78,7%	73,5%
61,00	2,80	1,31	15,96	17,9%	19,84	3,83	242,5	26,6	93,5%	78,9%	73,6%
62,00	2,75	1,14	15,78	20,4%	19,86	4,11	242,1	26,7	94,2%	78,7%	74,1%
63,00	2,71	0,80	14,94	23,8%	19,88	4,47	240,9	26,8	95,1%	78,7%	74,8%
64,00	2,67	0,83	14,84	25,3%	19,91	4,68	239,7	26,7	95,6%	78,7%	75,3%
65,00	2,62	0,58	14,62	26,7%	19,92	4,72	238,9	26,8	96,9%	78,9%	76,5%
66,00	2,53	0,48	14,88	28,0%	19,93	4,82	238,4	26,7	97,4%	78,9%	76,9%
67,00	2,48	0,45	14,89	30,1%	19,94	5,05	237,5	26,8	97,8%	78,9%	77,3%
68,00	2,44	0,33	14,73	30,5%	19,95	5,08	236,4	26,8	98,3%	79,0%	77,6%
69,00	2,39	0,30	14,70	30,9%	19,95	5,10	235,0	26,8	98,4%	79,1%	77,8%
70,00	2,35	0,26	14,63	31,9%	19,96	5,20	233,9	26,9	98,0%	79,1%	78,0%
71,00	2,30	0,20	14,53	33,3%	19,97	5,32	232,6	26,8	98,0%	79,1%	78,2%
72,00	2,21	0,21	14,50	33,4%	19,98	5,38	231,3	26,9	98,9%	79,1%	78,2%
73,00	2,21	0,21	14,07	37,6%	20,02	5,83	230,1	26,9	98,9%	79,0%	78,1%
74,00	2,13	0,21	13,81	40,1%	20,05	6,10	228,0	26,9	98,9%	78,9%	78,0%
75,00	2,12	0,17	13,63	42,4%	20,03	6,32	226,6	26,9	99,1%	78,9%	78,2%
76,00	2,08	0,14	13,46	44,5%	20,04	6,52	224,7	26,8	99,3%	78,9%	78,4%
77,00	2,03	0,10	13,35	45,9%	20,05	6,64	223,1	26,9	99,3%	78,9%	78,6%
78,00	1,98	0,07	13,26	47,1%	20,06	6,75	221,5	26,9	99,7%	79,0%	78,8%
79,00	1,94	0,07	13,23	47,7%	20,06	6,80	220,3	26,9	99,7%	79,0%	78,8%
80,00	1,89	0,08	13,19	48,2%	20,06	6,84	219,1	26,9	99,8%	79,1%	78,9%
81,00	1,85	0,08	13,16	48,6%	20,07	6,90	218,2	26,9	99,8%	79,1%	78,9%
82,00	1,85	0,08	13,16	48,7%	20,07	6,88	217,5	26,9	99,8%	79,2%	79,0%
83,00	1,80	0,08	13,21	47,9%	20,06	6,72	217,0	26,9	99,8%	79,3%	79,1%
84,00	1,76	0,09	13,43	45,4%	20,05	6,48	216,7	27,0	99,8%	79,4%	79,1%
85,00	1,71	0,10	13,49	44,9%	20,04	6,50	216,1	27,0	99,9%	79,4%	79,1%
86,00	1,67	0,10	13,29	46,7%	20,06	6,72	214,9	26,9	99,9%	79,4%	79,0%
87,00	1,63	0,10	12,98	50,3%	20,09	7,08	214,5	27,0	99,9%	79,3%	78,9%
88,00	1,62	0,10	12,95	50,8%	20,09	7,08	213,3	26,9	99,9%	79,3%	78,9%
89,00	1,58	0,11	12,77	52,8%	20,08	7,26	212,6	27,0	99,9%	79,2%	78,7%
90,00	1,53	0,13	12,73	53,8%	20,09	7,36	211,7	27,0	99,9%	79,2%	78,8%
91,00	1,53	0,13	12,69	53,3%	20,09	7,34	210,9	26,9	99,9%	79,2%	78,7%
92,00	1,49	0,08	12,53	55,8%	20,11	7,54	209,8	26,9	99,9%	79,2%	78,8%

93,00	1,44	0,05	12,08	62,0%	20,14	8,04	208,5	27,0	99,9%	78,9%	78,8%
94,00	1,44	0,03	11,62	68,7%	20,17	8,54	205,9	26,9	100,0%	78,7%	78,7%
95,00	1,39	0,02	11,21	74,8%	20,20	8,96	204,8	27,1	100,1%	78,5%	78,6%
96,00	1,39	0,02	10,87	80,8%	20,22	9,35	202,6	26,9	100,1%	78,3%	78,4%
97,00	1,35	0,02	10,48	87,7%	20,25	9,79	201,0	27,0	100,1%	78,1%	78,2%
98,00	1,35	0,02	10,25	91,2%	20,26	10,00	199,2	27,0	100,1%	78,0%	78,1%
99,00	1,30	0,02	10,19	92,5%	20,27	10,07	197,6	26,9	100,1%	78,0%	78,1%
100,00	1,30	0,02	10,07	94,7%	20,27	10,19	195,8	27,0	100,1%	78,1%	78,2%
101,00	1,30	0,02	9,93	97,4%	20,28	10,34	194,2	26,9	100,1%	78,0%	78,1%
102,00	1,26	0,02	9,85	98,9%	20,29	10,42	193,1	26,9	100,1%	78,0%	78,1%
103,00	1,26	0,03	9,79	100,2%	20,29	10,49	191,5	26,9	100,1%	78,1%	78,1%
104,00	1,26	0,03	9,54	105,4%	20,31	10,76	190,5	26,8	100,1%	77,9%	78,0%
105,00	1,21	0,03	9,32	110,0%	20,32	10,98	189,5	26,8	100,1%	77,7%	77,8%
106,00	1,21	0,03	9,26	111,3%	20,33	11,05	188,7	26,9	100,1%	77,7%	77,8%
107,00	1,21	0,03	9,21	112,6%	20,33	11,11	187,7	26,8	100,0%	77,7%	77,8%
108,00	1,17	0,04	9,03	116,7%	20,34	11,30	187,0	26,8	100,0%	77,8%	77,8%
109,00	1,17	0,03	8,88	120,0%	20,35	11,47	186,0	26,9	100,1%	77,3%	77,3%
110,00	1,17	0,03	8,81	122,1%	20,36	11,53	184,7	26,8	100,1%	77,8%	77,8%
111,00	1,12	0,03	8,81	122,1%	20,36	11,53	183,6	26,8	100,1%	77,8%	77,8%
112,00	1,12	0,03	8,83	121,7%	20,35	11,51	182,4	26,8	100,1%	77,7%	77,8%
113,00	1,12	0,03	8,91	119,7%	20,35	11,42	181,2	26,8	100,1%	77,9%	78,0%
114,00	1,12	0,03	8,89	120,2%	20,35	11,45	180,0	26,8	100,1%	78,0%	78,0%
115,00	1,08	0,03	8,80	122,4%	20,36	11,54	179,3	26,8	100,1%	77,9%	78,0%
116,00	1,08	0,03	8,69	125,0%	20,36	11,65	178,8	26,7	100,1%	77,8%	77,9%
117,00	1,08	0,04	8,62	127,0%	20,37	11,73	178,1	26,8	100,0%	77,8%	77,8%
118,00	1,08	0,04	8,55	128,8%	20,37	11,81	177,7	26,7	100,0%	77,7%	77,7%
119,00	1,03	0,04	8,53	129,3%	20,37	11,83	176,7	26,7	100,0%	77,8%	77,8%
120,00	1,03	0,04	8,55	128,6%	20,37	11,80	176,3	26,7	100,0%	77,8%	77,8%
121,00	1,03	0,04	8,53	129,1%	20,37	11,82	176,0	26,7	100,0%	77,9%	77,8%
122,00	0,98	0,04	8,53	129,1%	20,37	11,82	174,9	26,7	100,0%	77,9%	77,9%
123,00	0,98	0,04	8,50	129,9%	20,38	11,85	174,5	26,6	100,0%	77,9%	77,9%
124,00	0,98	0,05	8,48	130,3%	20,38	11,87	174,1	26,5	100,0%	77,9%	77,9%
125,00	0,98	0,05	8,50	129,8%	20,38	11,85	173,8	26,7	99,9%	78,0%	77,9%
126,00	0,98	0,05	8,51	129,5%	20,37	11,84	173,4	26,7	99,9%	78,0%	78,0%
127,00	0,94	0,05	8,51	129,6%	20,38	11,84	173,0	26,7	99,9%	78,1%	78,0%
128,00	0,94	0,04	8,52	129,5%	20,37	11,84	172,1	26,6	100,0%	78,1%	78,1%
129,00	0,94	0,05	8,46	130,9%	20,38	11,89	171,9	26,7	100,0%	78,1%	78,1%
130,00	0,81	0,05	8,55	128,4%	20,37	11,80	171,2	26,7	99,9%	78,2%	78,2%
131,00	0,94	0,05	8,58	127,7%	20,37	11,77	171,1	26,6	99,9%	78,3%	78,3%
132,00	0,90	0,05	8,57	127,9%	20,37	11,78	171,0	26,8	99,9%	78,3%	78,2%
133,00	0,90	0,05	8,54	128,6%	20,37	11,81	171,0	26,7	99,9%	78,3%	78,2%
134,00	0,85	0,05	8,53	129,0%	20,37	11,82	170,2	26,6	99,9%	78,3%	78,3%
135,00	0,85	0,05	8,51	129,2%	20,37	11,83	170,0	26,7	99,9%	78,3%	78,2%
136,00	0,85	0,05	8,50	129,7%	20,38	11,85	169,7	26,7	99,9%	78,3%	78,2%
137,00	0,85	0,05	8,50	129,7%	20,38	11,85	169,2	26,6	99,9%	78,4%	78,3%
138,00	0,80	0,05	8,37	133,2%	20,38	11,99	169,3	26,7	99,9%	78,2%	78,1%
139,00	0,84	0,06	8,37	133,2%	20,38	11,99	168,9	26,8	99,9%	78,2%	78,1%
140,00	0,80	0,06	8,35	133,6%	20,38	12,00	168,7	26,9	99,9%	78,2%	78,1%
141,00	0,80	0,06	8,33	134,2%	20,39	12,03	168,3	26,7	99,9%	78,2%	78,1%
142,00	0,76	0,06	8,32	134,6%	20,39	12,04	168,2	26,5	99,9%	78,2%	78,1%
143,00	0,76	0,06	8,30	135,1%	20,39	12,06	168,1	26,6	99,9%	78,2%	78,1%
144,00	0,76	0,05	8,20	137,9%	20,39	12,17	167,9	26,5	99,9%	78,1%	78,0%
145,00	0,76	0,06	8,12	140,3%	20,40	12,25	167,8	26,7	99,9%	78,0%	77,9%
146,00	0,76	0,06	8,12	140,3%	20,40	12,25	167,5	26,6	99,9%	78,0%	77,9%
147,00	0,71	0,06	8,07	141,6%	20,40	12,30	167,2	26,6	99,9%	78,0%	77,9%
148,00	0,71	0,06	8,10	140,6%	20,40	12,27	166,9	26,5	99,9%	78,0%	77,9%
149,00	0,69	0,06	8,01	143,4%	20,41	12,37	166,7	26,5	99,9%	77,9%	77,9%
150,00	0,71	0,06	7,97	144,6%	20,41	12,40	166,6	26,6	99,9%	77,9%	77,8%
151,00	0,67	0,06	7,99	144,1%	20,41	12,39	165,9	26,7	99,9%	78,0%	77,9%
152,00	0,67	0,06	7,96	144,9%	20,41	12,42	165,8	26,5	99,9%	78,0%	77,8%
153,00	0,67	0,06	7,94	145,4%	20,41	12,44	165,7	26,6	99,9%	78,0%	77,8%
154,00	0,67	0,06	7,94	145,6%	20,41	12,44	165,6	26,5	99,9%	78,0%	77,8%
155,00	0,66	0,06	7,91	146,2%	20,41	12,47	165,6	26,7	99,9%	77,9%	77,8%
156,00	0,62	0,06	7,90	146,8%	20,41	12,49	165,6	26,4	99,9%	77,9%	77,8%
157,00	0,62	0,06	7,88	147,4%	20,42	12,51	165,6	26,8	99,9%	77,9%	77,7%
158,00	0,62	0,06	7,86	148,4%	20,42	12,54	165,2	26,8	99,9%	77,9%	77,7%
159,00	0,58	0,07	7,81	149,3%	20,42	12,57	165,6	26,6	99,9%	77,8%	77,6%
160,00	0,58	0,07	7,84	148,7%	20,42	12,54	165,2	26,7	99,9%	77,9%	77,7%
161,00	0,58	0,07	7,79	149,9%	20,42	12,59	165,4	26,8	99,9%	77,8%	77,6%
162,00	0,58	0,06	7,57	157,0%	20,44	12,84	164,9	26,7	99,9%	77,5%	77,4%
163,00	0,59	0,06	7,48	160,4%	20,44	12,93	164,5	26,8	99,9%	77,4%	77,3%
164,00	0,58	0,06	7,48	160,4%	20,44	12,93	164,0	26,9	99,9%	77,5%	77,4%
165,00	0,53	0,06	7,50	159,6%	20,44	12,91	163,3	26,7	99,9%	77,5%	77,4%
166,00	0,53	0,06	7,52	159,1%	20,44	12,89	163,2	26,9	99,9%	77,6%	77,5%
167,00	0,53	0,06	7,48	160,4%	20,44	12,93	163,1	26,8	99,9%	77,5%	77,4%
168,00	0,49	0,06	7,50	159,6%	20,44	12,91	162,7	26,7	99,9%	77,6%	77,5%
169,00	0,49	0,06	7,52	159,2%	20,44	12,89	162,6	26,6	99,9%	77,6%	77,5%
170,00	0,49	0,06	7,53	158,7%	20,44	12,88	162,3	26,8	99,9%	77,7%	77,6%
171,00	0,49	0,06	7,49	160,2%	20,44	12,92	161,7	26,8	99,9%	77,7%	77,5%
172,00	0,49	0,06	7,40	163,1%	20,45	13,01	161,7	26,8	99,9%	77,5%	77,4%
173,00	0,49	0,06	7,34	165,0%	20,45	13,08	161,5	26,7	99,9%	77,5%	77,3%
174,00	0,49	0,06	7,34	165,5%	20,45	13,08	161,6	26,5	99,9%	77,5%	77,3%
175,00	0,44	0,06	7,30	166,6%	20,45	13,12	161,3	26,6	99,9%	77,4%	77,3%
176,00	0,44	0,06	7,31	166,6%	20,45	13,12	161,3	26,7	99,9%	77,5%	77,3%
177,00	0,40	0,06	7,30	166,7%	20,45	13,12	160,8	26,5	99,9%	77,5%	77,3%
178,00	0,40	0,06	7,33	166,0%	20,45	13,10	161,0	26,6	99,9%	77,5%	77,3%
179,00	0,40	0,06	7,31	166,0%	20,45	13,12	160,8	26,5	99,9%	77,5%	77,3%
180,00	0,40	0,06	7,36	164,7%	20,45	13,06	160,5	26,6	99,9%	77,6%	77,5%
181,00	0,40	0,06	7,50	159,8%	20,44	12,91	160,6	26,7	99,9%	77,8%	77,6%
182,00	0,39	0,06	7,45	161,4%	20,44	12,96	159,9	26,6	99,9%	77,8%	77,6%
183,00	0,37	0,06	7,45	161,4%	20,44	12,96	160,0	26,8	99,9%	77,8%	77,6%
184,00	0,35	0,06	7,47	160,9%	20,44	12,94	160,0	26,8	99,9%	77,8%	77,7%
185,00	0,35	0,06	7,50	159,7%	20,44	12,91	160,2	26,7	99,9%	77,8%	77,7%
186,00	0,35	0,06	7,52	159,2%	20,44	12,89	159,6	26,8	99,9%	77,9%	77,8%
187,00	0,30	0,06	7,50	159,8%	20,44	12,91	159,5	26,8	99,9%	77,9%	77,8%
188,00	0,30	0,06	7,48	160,3%	20,44	12,93	159,5	26,8	99,9%	77,9%	77,8%
189,00	0,30	0,06	7,47	160,9%	20,44	12,94	159,3	26,8	99,9%	77,9%	77,7%
190,00	0,30	0,06	7,42	162,7%	20,45	13,00	159,0	26,7	99,9%	77,8%	77,7%
191,00	0,26	0,06	7,37	164,1%	20,45	13,04	158,6	26,6	99,9%	77,8%	77,6%
192,00	0,26	0,06	7,37	164,2%	20,45	13,05	158,8	26,7	99,9%	77,8%	77,6%
193,00	0,26	0,06	7,35	164,8%	20,45	13,06	158,5	26,7	99,9%	77,8%	77,6%
194,00	0,26	0,06	7,30	166,8%	20,45	13,12	158,0	26,4	99,9%	77,8%	77,7%
195,00	0,26	0,06	7,26	167,4%	20,45	13,14	157,5	26,5	99,9%	77,8%	77,7%
196,00	0,26	0,06	7,22	169,0%	20,46	13,21	157,3	26,6	99,9%	77,7%	77,6%
197,00	0,23	0,06	7,18	171,0%	20,46	13,24	156,8	26,8	99,9%	77,7%	77,6%
198,00	0,22	0,06	7,24	169,1%	20,46	13,19	156,9	26,8	99,9%	77,8%	77,7%
199,00	0,19	0,06	7,09	174,0%	20,47	13,35	156,4	26,9	99,9%	77,6%	77,5%
200,00	0,22	0,06	6,98	176,3%	20,48	13,47	155,8	26,6	99,9%	77,5%	77,4%
201,00	0,17	0,06	6,96	176,9%	20,48	13,49	155,5	26,6	99,9%	77,5%	77,4%
202,00	0,17	0,06	6,91	182,0%	20,48	13,56	155,1	26,5	99,9%	77,4%	77,3%
203,00	0,17	0,06	6,88	183,3%	20,48	13,58	154,8	26,7	99,9%	77,4%	77,4%
204,00	0,17	0,06	6,88	183,3%	20,48	13,58	154,1	26,5	99,9%	77,5%	77,4%
205,00	0,13	0,06	6,85	184,0%	20,48	13,61	153,8	26,7	99,9%	77,5%	77,4%
206,00	0,13	0,06	6,81	185,9%	20,49	13,64	153,0	26,7	99,9%	77,5%	77,4%

207,00	0,12	0,06	6,76	188,0%	20,49	13,70	153,1	26,8	99,9%	77,4%	77,2%
208,00	0,12	0,06	6,70	190,7%	20,49	13,77	152,9	26,9	99,9%	77,3%	77,2%
209,00	0,12	0,06	6,70	190,7%	20,49	13,77	152,9	26,9	99,9%	77,3%	77,2%
210,00	0,12	0,06	6,70	189,9%	20,49	13,75	152,7	26,7	99,9%	77,4%	77,2%
211,00	0,09	0,06	6,70	190,6%	20,49	13,77	152,3	26,9	99,9%	77,4%	77,3%
212,00	0,12	0,06	6,68	191,4%	20,49	13,78	151,9	26,9	99,9%	77,4%	77,3%
213,00	0,09	0,06	6,71	189,9%	20,49	13,75	152,3	26,8	99,9%	77,4%	77,3%
214,00	0,08	0,06	6,67	192,0%	20,50	13,80	152,2	26,7	99,9%	77,3%	77,2%
215,00	0,04	0,06	6,66	192,0%	20,50	13,80	151,6	26,7	99,9%	77,4%	77,2%
216,00	0,03	0,06	6,66	191,9%	20,50	13,80	151,7	26,7	99,9%	77,4%	77,2%
217,00	0,03	0,06	6,60	194,8%	20,50	13,87	151,8	26,7	99,9%	77,2%	77,1%
218,00	0,03	0,06	6,57	196,3%	20,50	13,90	151,5	26,8	99,9%	77,2%	77,1%
219,00	0,03	0,06	6,55	197,0%	20,50	13,92	151,4	26,8	99,9%	77,2%	77,1%
220,00	0,03	0,06	6,53	197,8%	20,50	13,94	151,0	26,6	99,9%	77,2%	77,1%
221,00	0,03	0,06	6,58	195,6%	20,50	13,89	150,8	26,5	99,9%	77,3%	77,2%
222,00	0,00	0,06	6,57	196,3%	20,50	13,90	151,1	26,6	99,9%	77,3%	77,1%

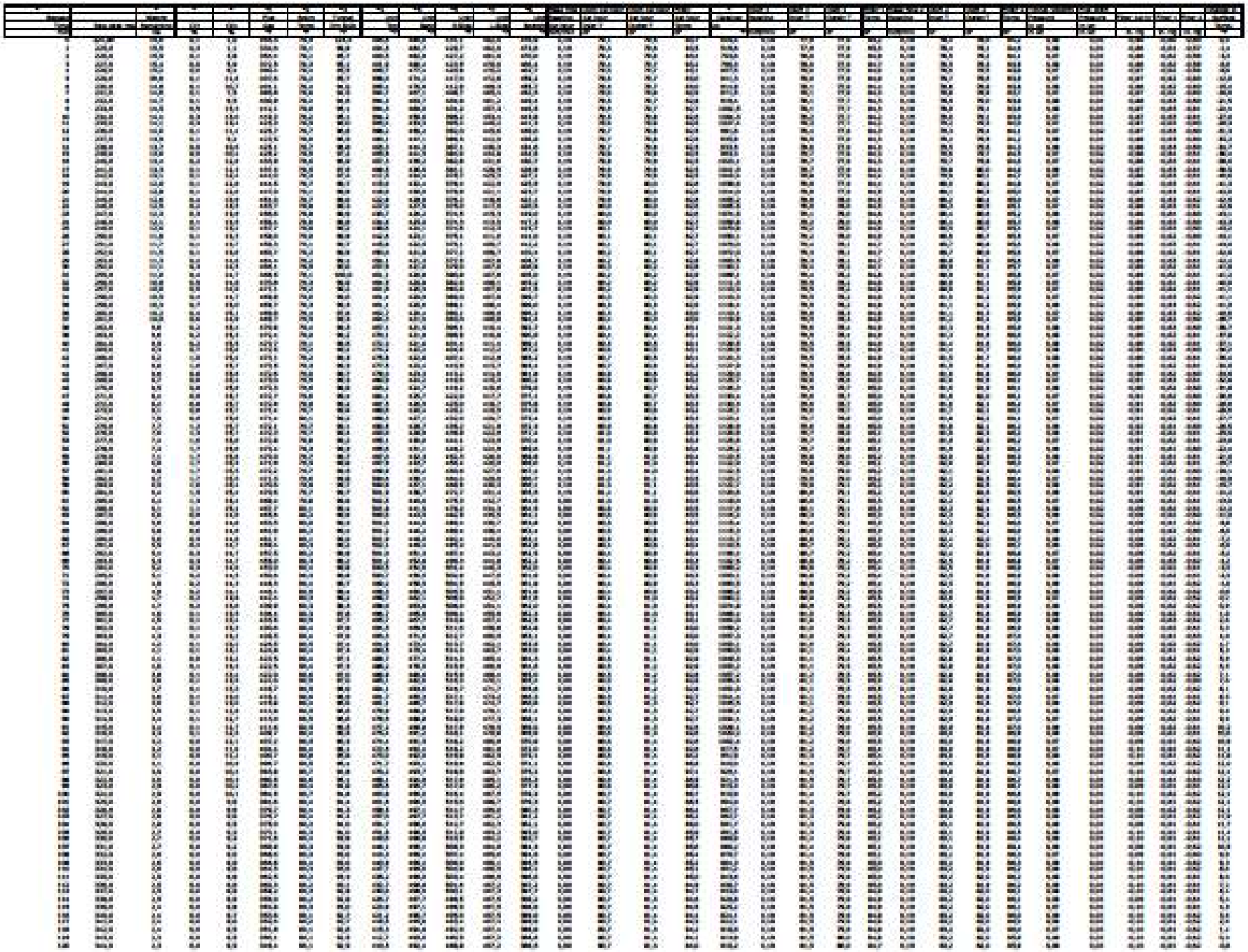

SFBA EPA EMISSION RESULTS

Test Duration: **222** min

PRESSURE FACTOR:	DGM 1st hr	0,969	
	DGM 1	0,978	
	DGM 2	0,978	
	DGM 3	0,999	
TEMPERATURE FACTORS	DGM 1st hr	0,977	
	DGM 1	0,977	
	DGM 2	0,974	
	DGM 3	0,978	
VOLUMES SAMPLED	DGM 1st hr	11,472	SCft
	DGM 1	38,997	SCft
	DGM 2	40,809	SCft
	DGM 3	31,178	SCft

TOTAL TUNNEL VOLUME : 76571

SAMPLE RATIOS

Sample Train 1st Hr:	1804,0
Sample Train 1:	1963,5
Sample Train 2:	1876,3

Paticulate concentration

Sample Train 1st Hr	**0,000052**	g/dscf
Sample Train 1	**0,000031**	g/dscf
Sample Train 2	**0,000029**	g/dscf
Room	**0,000003**	g/dscf

TOTAL EMISSIONS

Sample Train 1st Hr	**1,02**	g
Sample Train 1	**2,11**	g
Sample Train 2	**2,01**	g

EMISSION RATES

Sample Train 1st Hr	**1,02**	g/hr
Sample Train 1	**0,57**	g/hr
Sample Train 2	**0,54**	g/hr

	Train 1	Train 2	Train 1st Hr
Cs	3,077E-05	2,9405E-05	5,23E-05

RESULTS

Average emission rate: 0,56 g/hr

Burn Rate : 1,59 Dry kg/hr

BAROMETRIC PRESSURE

Average:	29,88434875	In Hg
Start:	29,94340873	In Hg
End:	29,82528877	In Hg

DGM VALUES

DGM 1st hr	Final:	2621,580	Cuft
	Initial:	2609,440	Cuft
DGM 1	Final:	30344,544	Cuft
	Initial:	30303,503	Cuft
DGM 2	Final:	21470,279	Cuft
	Initial:	21427,221	Cuft
DGM #3	Final:	16619,418	Cuft
	Initial:	16587,444	Cuft

TEMPERATURES

DGM 1st hr	540,280	°R
DGM 1	540,178	°R
DGM 2	542,128	°R

CALIBRATION FACTORS

DGM 1st hr	0,9978
DGM 1	0,9936
DGM 2	0,9946
DGM #3	0,9982

TUNNEL FLOW RATE: 344,9 Dscfm

PARTICULATE CATCH

Total Sample Train 1:	1,20	mg
Total Sample Train 2:	1,20	mg
Total Sample Train 1 1st hour:	0,60	mg

DEVIATION: 2,54%

DATA 2023-10-05 EPA PI 2029H RUN 4 CAT 3
preburn / preload

Time acquisition minutes	Flue temp °F	Room temp °F	Tunnel dry bulb °F	Catalyst up °F	scale lbs	Right °F	Back °F	bottom °F	Top °F	Left °F
1	75,43	73,84	75,26	76,50	4,87	76,68	77,46	77,97	77,13	77,31
2	79,03	73,99	75,72	79,29	5,87	76,65	77,46	77,97	77,15	77,16
3	103,28	73,96	76,23	97,43	4,87	76,66	77,46	94,80	77,14	77,20
4	118,85	73,87	80,17	122,64	4,78	76,62	77,85	121,07	77,14	77,23
5	181,36	73,88	82,27	225,91	4,88	77,16	78,24	140,89	77,25	77,37
6	199,77	73,94	80,74	253,23	4,47	77,66	79,47	157,18	77,47	77,78
7	205,76	74,04	79,74	232,19	4,47	78,96	80,96	157,31	77,79	78,89
8	215,79	74,00	79,66	218,50	4,37	80,46	82,40	155,53	78,33	80,30
9	224,10	74,00	80,33	211,91	4,27	82,22	83,94	154,74	78,91	82,17
10	246,08	73,99	81,41	213,22	4,17	84,30	85,55	155,42	79,58	84,47
11	256,29	73,97	81,72	220,18	4,17	86,07	87,30	157,00	80,53	87,11
12	260,94	74,04	82,24	227,66	4,08	88,45	89,42	160,40	81,87	90,17
13	270,18	74,09	82,89	236,21	3,98	92,55	91,84	172,79	83,04	93,41
14	287,26	74,05	84,12	250,36	3,94	95,02	94,01	180,84	84,54	96,91
15	317,85	74,05	86,02	278,18	3,89	99,39	96,91	186,27	86,23	100,67
16	327,75	74,10	86,41	302,84	3,87	103,27	99,55	188,27	88,14	104,70
17	339,77	74,22	87,26	325,74	3,87	107,50	102,75	192,13	90,28	108,97
18	345,91	74,23	87,46	334,84	3,87	112,10	106,13	196,66	92,73	113,52
19	350,45	74,29	88,21	340,70	3,47	117,10	109,73	200,60	95,47	118,31
20	351,43	74,24	88,61	350,71	3,36	122,46	113,48	204,13	98,51	123,30
21	356,58	74,32	88,87	357,88	3,27	128,33	117,37	209,31	101,50	128,53
22	354,51	74,40	89,00	359,84	3,17	134,52	121,44	218,36	104,66	133,39
23	353,97	74,54	89,20	359,32	3,08	141,14	125,98	231,09	107,98	138,53
24	354,55	74,44	89,15	358,13	2,98	147,98	130,94	242,82	111,44	143,57
25	352,03	74,45	89,07	358,30	2,87	155,12	136,36	249,99	114,98	148,81
26	346,43	74,44	88,80	358,88	2,87	162,45	142,08	260,03	118,04	153,73
27	346,98	74,51	88,14	358,18	2,78	169,41	147,99	274,72	121,52	158,75
28	344,88	74,51	89,01	358,81	2,68	176,34	153,89	287,06	124,72	163,66
29	345,43	74,51	89,02	359,87	2,68	182,87	160,14	298,08	128,00	168,47
30	346,71	74,50	89,27	358,88	2,57	189,78	166,25	310,09	131,09	173,22
31	355,53	74,64	90,53	377,60	2,47	194,62	172,18	319,23	134,27	177,90
32	362,49	74,67	92,59	396,15	2,37	200,47	177,88	320,65	137,62	182,59
33	432,84	74,72	95,26	421,53	2,17	206,69	183,36	319,64	140,69	187,37
34	448,43	74,65	96,34	446,11	2,07	214,43	188,70	318,32	143,96	192,05
35	450,84	74,69	96,71	454,76	1,97	222,59	193,99	317,47	147,96	197,05
36	445,44	74,91	96,24	439,75	1,87	231,87	199,14	316,15	151,78	202,22
37	437,20	74,89	96,12	429,84	1,77	241,16	204,06	315,72	155,90	207,65
38	427,89	74,84	95,95	418,36	1,57	250,43	208,66	317,47	160,39	213,24
39	421,51	74,67	95,31	412,10	1,57	259,04	213,49	320,66	165,00	218,02
40	418,03	74,92	94,76	412,55	1,49	267,13	217,96	325,40	169,41	224,72
41	410,94	74,94	94,67	413,91	1,44	274,46	222,31	330,93	173,78	230,41
42	402,80	74,97	94,17	417,20	1,37	280,63	226,58	335,77	177,93	235,65
43	391,26	75,05	101,26	403,21	5,18	286,56	231,01	345,05	182,36	241,17
44	342,50	75,00	121,17	291,08	17,48	291,23	235,58	348,50	186,87	246,24
45	319,74	75,16	122,55	284,28	17,38	294,55	239,53	348,12	190,48	250,58
46	314,90	75,02	121,87	272,84	17,28	296,83	243,98	347,33	193,74	254,07
47	332,90	75,10	126,48	290,15	17,08	298,37	248,05	344,58	196,21	256,77
48	330,45	75,21	124,72	284,68	16,98	299,95	248,68	342,23	198,19	258,87
49	322,23	75,12	123,58	281,57	16,78	301,96	250,79	340,23	199,78	260,05
50	325,57	75,02	124,50	281,30	16,68	303,92	252,70	338,47	201,25	260,90
51	344,18	75,01	129,28	288,91	16,48	306,06	254,53	337,07	202,31	261,61
52	340,58	75,11	130,41	284,48	16,38	308,51	256,13	336,10	202,90	262,00
53	323,30	75,19	93,34	302,17	16,28	310,97	257,47	335,73	203,43	262,05
54	309,76	75,24	91,09	304,89	16,18	313,17	259,78	335,75	204,40	262,07
55	296,47	75,26	89,66	302,33	16,18	315,12	259,85	336,91	204,72	261,90
56	288,19	75,26	89,44	299,57	16,08	315,87	260,53	336,29	205,21	261,63
57	283,15	75,11	88,54	299,90	15,98	316,27	261,31	337,13	206,13	261,15
58	280,11	75,17	88,20	299,19	15,98	315,14	262,01	338,53	206,37	260,36
59	278,17	75,21	87,73	297,20	15,88	314,20	262,69	340,24	207,11	259,47
60	276,41	75,13	87,64	296,03	15,88	313,47	263,40	342,49	207,01	258,61
61	274,18	75,22	87,42	297,60	15,78	312,47	263,96	345,04	207,15	257,78
62	270,23	75,19	87,33	296,60	15,68	310,96	264,58	347,00	206,99	256,79
63	266,50	75,23	86,92	295,95	15,68	309,50	264,96	350,02	207,14	255,79
64	260,29	75,25	87,25	296,53	15,58	307,64	265,23	353,32	206,99	254,69
65	263,47	75,22	86,21	304,86	15,48	305,83	265,44	355,84	207,95	253,61
66	259,84	75,39	87,91	311,39	15,38	304,01	265,67	358,23	207,40	252,50
67	278,15	75,11	87,51	307,60	15,28	301,98	266,28	360,61	207,23	251,37
68	276,27	75,24	87,76	308,34	15,28	300,04	266,84	363,24	206,97	250,37
69	272,51	75,30	87,24	301,48	15,18	298,33	266,83	366,23	206,91	249,47
70	270,05	75,35	87,50	297,91	15,08	296,40	266,97	369,09	207,10	248,65
71	267,74	75,30	87,50	293,76	14,98	294,60	266,96	371,73	206,68	247,76
72	268,59	75,44	86,49	296,68	14,88	292,75	266,95	374,14	206,66	246,87
73	270,85	75,37	86,93	297,43	14,78	290,75	266,87	376,32	206,75	246,39
74	265,00	75,39	87,05	294,14	14,68	288,99	266,89	378,26	206,75	245,90
75	261,84	75,41	86,87	291,78	14,63	287,18	266,53	380,18	206,46	245,50
76	259,92	75,39	87,84	290,18	14,54	285,18	266,37	382,17	206,76	245,35
77	257,45	75,35	88,53	309,85	14,38	283,44	266,18	384,18	206,63	245,23
78	301,05	75,29	88,74	319,74	14,28	281,32	265,84	386,08	206,46	245,00
79	303,83	75,31	89,13	326,62	14,18	279,47	265,68	388,02	206,74	244,84
80	322,77	75,31	90,57	336,62	14,08	278,04	265,58	390,15	206,76	244,80
81	374,34	75,36	93,36	372,76	13,88	276,43	265,91	392,58	206,91	244,85
82	412,26	75,47	95,69	412,92	13,78	275,42	266,84	395,19	207,43	244,58
83	451,29	75,52	99,00	474,23	13,48	274,64	267,93	397,78	208,03	244,93
84	503,37	75,56	102,87	535,26	13,38	274,16	269,38	399,84	208,80	245,65
85	525,95	75,68	104,23	560,89	13,08	273,96	271,05	401,08	210,45	246,70
86	522,57	75,60	104,79	567,89	12,98	274,76	272,97	404,15	213,26	248,06
87	528,35	75,63	105,88	570,80	12,88	275,79	275,36	406,65	216,51	249,66
88	553,09	75,77	107,85	576,73	12,48	277,18	277,96	409,77	221,66	251,40
89	573,87	75,74	109,83	590,41	12,38	278,56	281,19	412,66	226,82	253,44

90	597,52	75,91	110,89	613,67	12,08	360,95	384,80	415,46	232,34	355,90
91	596,96	75,83	112,37	623,31	11,88	353,29	388,49	418,10	237,83	358,53
92	604,91	76,19	112,34	632,85	11,88	355,78	392,59	420,65	244,18	361,36
93	606,40	76,07	113,24	639,32	11,36	359,36	397,06	423,03	251,76	364,52
94	615,23	76,02	114,46	644,39	11,15	360,34	401,67	425,67	259,26	367,76
95	622,34	76,40	115,15	648,07	10,99	357,92	396,81	429,61	266,57	371,26
96	629,43	76,60	115,80	651,47	10,78	362,93	312,17	431,72	275,08	375,02
97	645,74	76,66	117,26	666,03	10,56	309,04	317,66	432,96	282,77	378,65
98	662,31	76,61	118,87	667,57	10,26	315,42	324,15	433,50	290,51	382,39
99	673,46	77,03	120,86	730,75	10,08	322,26	331,39	433,63	298,76	386,44
100	683,93	77,06	121,73	752,98	9,77	329,51	338,91	433,08	306,98	390,53
101	696,15	77,35	122,34	767,50	9,58	336,36	347,09	431,38	315,68	395,06
102	710,03	77,35	123,95	785,03	9,28	343,84	355,55	431,43	324,37	399,64
103	713,57	76,96	122,39	805,19	8,99	351,27	363,91	434,19	334,06	404,46
104	710,77	77,12	122,09	816,83	8,88	359,32	372,83	437,30	342,84	409,41
105	711,86	77,72	124,54	825,23	8,47	367,90	382,21	440,00	352,30	414,34
106	712,99	77,79	125,68	828,34	8,18	379,34	391,85	442,36	361,55	419,50
107	697,83	77,55	119,48	836,77	7,96	394,66	401,51	444,09	370,48	325,03
108	594,07	77,76	102,19	1026,89	7,77	394,80	411,51	445,06	378,10	330,36
109	546,95	77,39	105,31	1057,31	7,67	404,73	419,88	444,75	383,10	335,66
110	523,61	77,65	103,29	1051,91	7,58	413,82	426,41	443,31	389,61	340,83
111	506,22	77,52	101,73	1014,94	7,48	419,77	432,26	439,87	395,30	345,09
112	493,86	77,46	101,19	1035,70	7,29	425,55	436,23	436,37	400,78	351,32
113	485,73	77,20	99,72	1067,05	7,17	430,82	440,56	437,92	406,57	356,26
114	479,10	77,58	99,05	1069,25	7,07	435,91	445,02	438,94	411,99	361,06
115	473,71	77,55	98,72	1071,37	6,97	439,35	448,54	440,77	415,94	364,66
116	469,95	77,69	98,53	1075,37	6,78	441,92	451,59	442,66	420,93	368,94
117	465,47	77,37	98,20	1076,14	6,68	444,80	454,45	444,19	424,62	373,17
118	461,80	77,40	97,94	1074,76	6,58	446,82	457,03	445,03	427,93	377,37
119	458,76	77,46	97,19	1071,73	6,47	448,70	458,50	445,04	430,64	381,36
120	454,39	77,74	96,67	1066,30	6,37	451,06	460,98	444,69	434,15	384,96
121	448,82	77,72	96,55	1061,49	6,27	452,48	462,58	443,92	436,76	388,53
122	444,75	77,57	96,32	1057,02	6,18	453,89	464,66	442,76	438,08	392,12
123	441,30	77,69	95,76	1051,85	6,08	455,74	466,73	441,46	440,44	395,62
124	437,00	77,36	95,67	1044,30	5,98	457,27	467,82	440,25	442,49	398,67
125	433,27	77,62	95,01	1039,26	5,87	458,34	469,46	439,40	444,28	401,67
126	429,23	77,65	93,68	1029,57	5,77	459,17	471,03	438,68	445,89	404,84
127	426,47	77,56	93,25	1021,19	5,67	460,28	472,83	438,02	446,48	407,92
128	423,01	77,74	93,67	1020,00	5,57	461,10	474,65	436,66	446,17	410,89
129	419,14	77,70	93,99	1007,76	5,57	462,31	477,26	436,67	446,66	413,57
130	414,94	78,00	93,90	996,80	5,48	463,43	479,05	436,26	446,13	416,07
131	412,36	78,02	93,39	1018,74	5,38	464,42	480,19	436,63	445,33	418,51
132	411,57	77,97	92,99	1025,99	5,27	465,29	481,83	439,21	444,47	420,31
133	411,06	77,37	93,13	1015,19	5,17	465,54	482,37	438,03	444,14	422,35
134	410,53	77,93	93,59	1005,51	5,17	464,36	483,96	436,84	442,40	425,01
135	409,29	78,06	93,20	997,35	5,07	464,25	483,48	435,70	441,66	427,31
136	407,04	77,73	93,39	974,14	4,97	464,46	483,15	436,10	442,00	429,56
137	404,72	77,95	93,39	966,61	4,88	465,83	482,67	436,91	443,01	431,74
138	401,39	77,99	93,27	966,84	4,87	465,53	482,07	437,03	441,96	433,59
139	396,72	78,13	92,99	962,09	4,78	461,51	482,20	436,73	440,66	435,59
140	396,33	77,96	93,18	957,16	4,68	459,94	482,18	439,77	439,20	437,61
141	395,00	78,05	92,82	970,34	4,68	459,11	481,59	440,96	436,73	439,61
142	396,04	78,09	92,82	985,36	4,57	460,04	482,83	442,35	436,51	441,91
143	393,97	78,23	92,54	978,15	4,47	457,80	483,60	443,91	437,43	444,21
144	392,66	78,12	92,47	958,84	4,47	456,96	483,23	445,36	436,65	446,46
145	390,85	78,07	92,20	954,79	4,37	455,45	482,84	446,07	436,18	448,56
146	388,63	78,07	92,29	950,63	4,27	455,37	483,23	447,66	435,14	450,66
147	386,71	78,21	92,09	951,73	4,27	454,21	483,56	448,96	434,58	452,12
148	384,93	78,15	91,83	936,95	4,17	453,37	484,00	450,08	433,50	455,36
149	382,67	78,22	91,40	935,06	4,12	452,52	484,48	451,36	432,18	457,53
150	381,15	78,15	91,50	938,88	4,08	450,92	484,84	452,96	430,96	459,96
151	380,09	78,40	90,21	947,96	3,98	450,34	485,18	455,20	429,99	462,06
152	378,55	78,37	89,96	946,47	3,97	449,70	485,19	456,18	427,84	463,48
153	377,20	78,43	89,62	937,20	3,87	449,81	485,67	461,72	427,04	464,90
154	375,77	78,42	90,60	932,93	3,87	449,71	485,95	465,44	424,43	467,21
155	374,18	77,93	90,28	928,76	3,77	449,24	486,87	469,29	422,86	468,82
156	372,86	78,04	90,02	924,59	3,67	448,78	487,47	472,69	421,02	470,34
157	371,73	78,29	90,02	918,45	3,57	448,36	487,67	475,97	419,09	471,66
158	370,53	78,07	90,91	906,58	3,57	444,57	487,45	478,50	416,15	473,01
159	369,40	78,69	90,39	901,29	3,57	444,55	486,23	480,04	416,66	473,74
160	367,73	78,41	90,55	898,76	3,47	443,67	486,33	482,27	414,69	474,72
161	366,00	78,68	90,43	897,94	3,47	441,91	486,21	483,78	413,12	475,52
162	364,97	78,69	90,10	877,48	3,38	440,33	487,59	484,94	410,66	476,21
163	362,58	78,59	90,49	862,22	3,38	439,96	487,58	485,23	408,27	477,07
164	360,74	78,12	89,44	851,35	3,38	439,13	487,54	484,40	406,01	476,03
165	357,83	78,11	89,69	841,46	3,27	438,79	487,48	483,14	403,28	475,70
166	355,99	78,23	90,32	833,80	3,27	435,42	487,25	481,77	400,51	479,60
167	354,04	78,51	90,75	831,25	3,27	434,45	487,13	480,50	402,40	480,56
168	352,85	78,74	127,22	776,48	3,18	432,97	486,70	480,08	405,98	481,20
169	354,80	78,19	95,65	860,08	3,17	432,25	486,33	479,44	406,28	481,73

POLYTESTS
TESTING THROUGH YOUR REALITY

Date: 2023-10-05 Manufacturer: Hearthstone Model: 8024

Project #: PI 20294 Run: 4 Tech: MM Reviewer: DP

- Kindling 500lbs 5 total Fire
- After 2 min close Door
- Fan off
- By pass open
- At 14LBS insert pre load
- After 10 min close Door
- 82LBS close air inlet (space 5/8), close by pass and open Fan low
- At 32LBS open Door Rack coal close Door
- After 2 min open Door, open by pass, insert load close Door and close by pass
- Fan off
- After 5 min close air inlet (space 5/8)
- At 30 min open Fan low

TEST LOAD CONFIGURATION

POLYTESTS
TESTING THROUGH YOUR REALITY

PRE / POST CHECKS

Date: 2023-10-05 Manufacturer: Hearthstone Model: 8024

Project #: pI 20294 Run: 4 Tech: MM Reviewer: DP

	Equipment #	Time	12%	22%
Moisture Meter Calibration Check:	EM 334	7:00	ok	ok

	Pre-Test	Post-Test
Facility Conditions:		
Air Velocity from less than 2 feet	0 (max50 Fpm)	0 (max50 Fpm)
Smoke Capture Check (tunnel velocity)	ok	NA
Picture	4 sides ok	ok
Wood Heater Conditions:		
Date Wood Heater Stack Cleaned	2023-10-05	
Date Dilution Tunnel Cleaned	2023-10-05	
Induced Draft Check (max 0.005 H2O)	ok	
Traverse before ignition	ok	
Temperature System:		
Ambient (65°-90°F)		ok °F
Proportional Checks:		
Thermocouple check	ok	
Pitot Clean	ok	
Pitot verification	ok	
Pictures for report	Side	ok
	Coal bed	ok
	Load	ok
	Load in stove	ok
	Fuel adjustment	ok
Load Length 5/6 of firebox Length +- 1inch		ok

POLYTESTS
TESTING THROUGH YOUR REALITY

Date: 2023-10-05 Manufacturer: Hearthstone Model: 8024

Project #: ~~PS 2024~~ PS 20294 Run: 4 Tech: M.A Reviewer: DO

Leakage Checks Tunnel Samplers

	System 1st hour		System 1		System 2		Ambient	
Unplugged Flow Rate = .25cfm	Pre-Test ASTM (-15) CSA B415 (-5)	Post-Test (Max test)	Pre-Test ASTM (-15) CSA B415 (-5)	Post-Test (Max test)	Pre-Test ASTM (-15) CSA B415 (-5)	Post-Test (Max test)	Pre-Test ASTM (-15) CSA B415 (-5)	Post-Test (Max test)
Vacuum (inches Hg.)	-10	-10	-10	-10	-10	-10	-10	-10
Final 1minute DGM (Liter)	2609.39	2621.68	858098.75	859262.00	606751.09	607938.81	469703.76	470609.59
Initial 1minute DGM (Liter)	2609.39	2621.68	858098.59	859262.00	606750.99	607937.75	469703.76	470609.58
Change (Liter)	∅	∅	0.16	∅	0.10	0.06	∅	∅
Allowable leakage .04 x Sample rate or 0.28Lpm CSA B415 (0.56)								
Check OK	ok	ok	ok	ok	ok	ok	ok	ok

POLYTESTS
TESTING THROUGH YOUR FACILITY

Date: 2023-10-05 Manufacturer: Hearthstone Model: 8024

Project #: PI 12299 Run: 4 Tech: MM Reviewer: AD

Leakage Checks Flue Gas Sampler

Plugged Probe	Pre-Test	Post Test
Vacuum (inches Hg.)	-5	-5
Rotameter Reading (mml/min.)	0	0
Flow Rate (lpm)	1.5	1.5
Allowable (.02 x Sample Rate)	30	30
Check OK	ok	ok

Leakage Checks Pitot

Plugged Probe	Pre-Test 3 H2o static	Pre-Test 0.4-0.5 H2o velocity	Post Test 3 H2o Static	Post Test 0.4-0.5 H2o velocity
Vacuum (inches Hg.)	3	.4	3	.4
Check OK (no change after 15 sec.)	ok	ok	ok	ok

POLYTESTS

Date: 2023-10-05 Manufacturer: Henkelman Model: 8024

Project #: PE 20294 Run: 4 Tech: MM Reviewer: DO

Scale Type	Audit		Measured Weight
	Equipment #	Weight	
Platform	EM-090	44 lbs, Class F	44 lbs
Platform	EM-205	10,00 Kg, Class F	10,00 Kg
Wood	EM-090	440 lbs, Class F	440 lbs
Analytical	EM-335	100 mg, Class S	100 mg
Analytical	EM-129	200 g, Class S	200 g

LIMITS OF WEIGHT RANGES

ANALYTICAL SCALE: .....50%-150% of dry filter weight, ± 0.1 mg
PLATFORM SCALE ..... 20%-80% of ideal test load weight, ± 0.1 lbs or 1%
WOOD SCALE..... 20%-80% of ideal test load weight, ± 0.01 lbs or 1%

POLYTESTS

CONTINUOUS ANALYZERS

Date: 2023-10-05 Manufacturer: Hearthstone Model: 8025

Project #: pT 20294 Run: 4 Tech: MP Reviewer: DP

FOR TUNNELS < 12 in

Barometric pressure (P_{bar}) 101.4 (KPa.) Static pressure (P_g) _____(inches w.c.)
Inside diameter: Port A _____ Port B _____
Tunnel cross sectional area: .1963Ft^2
Pitot tube type: Standard

Traverse Point	Position (inches)			Velocity Head Δ_p (inches H_2O)	Tunnel Temperature (°F)
Tunnel diameter	6 po	7 po	8 po		
A- Centroid	3.00	3.50	4	0075	75 57
B - Centroid	3.00	3.50	4	0075	75 53
A-1	0.40	0.50	0.50	0061	75 57
A-2	1.50	1.75	2	0073	75 51
A-3	4.50	5.25	6	0070	75 51
A-4	5.60	6.5	7.5	0060	75 55
B-1	0.40	0.50	0.50	0060	75 53
B-2	1.50	1.75	2	0072	75 48
B-3	4.50	5.25	6	0071	75 48
B-4	5.60	6.5	7.5	0061	75 52
				AVERAGE	

CONTINUOUS ANALYZERS

Date:_____ Manufacturer:_____ Model:_____

Project #:_____ Run:_____ Tech:_____ Reviewer:_____

FOR TUNNELS 12 in

Barometric pressure (P_{bar}) _____ (KPa.) Static pressure (P_g) _____(inches w.c.)
Pitot tube type: Standard

Traverse Point	Position (inches)	Velocity Head Δ_p (inches H_2O)	Tunnel Temperature (°F)
A Center	6		
B Center	6		
A-1	0.53		
A-2	1.75		
A-3	3.55		
A-4	8.45		
A-5	10.25		
A-6	11.47		
B-1	0.53		
B-2	1.75		
B-3	3.55	N.A	
B-4	8.45		
B-5	10.25		
B-6	11.47		

POLYTESTS

CONTINUOUS ANALYZERS

Date: 2023-10-05 Manufacturer: Heath Kit Model: 8024

Project #: PI 20194 Run: 4 Tech: MP Reviewer: DP

Pre-Test (Adjust and Record)

	ZERO		SPAN		CAL. (Record Only)	
CO	0	0	30.29	3.00	~~1.007~~ 1.012 MP	1.00
Tolerance CO	0	+/- 0.02	0.029	+/- 0.15	0.012	+/- 0.05
CO_2	0	0	17.95	18.00	9.73	10.00
Tolerance CO2	0	+/- 0.02	0.01	+/- 0.5	0.27	+/- 0.5
O_2 informative CSA B415 calculated value	na	na	na	na	na	na
	Actual	Should Be	Actual	Should Be	Actual	Should Be

Post Test (Record Only)

	Zero	Span	Cal.	Zero Drift	Limit	Span Drift	Limit	Cal. Drift	Limit	OK?	Not OK*
CO	0	30.23	1.007	0	0.02	0.003	0.15	0.003	0.05	✓	
CO_2	0	17.98	9.98	0	0.02	0.01	0.5	0.05	0.5	✓	

POLYTESTS
TESTING THROUGH YOUR REALITY

TEST DATA LOG

Date: 2023-10-05 Manufacturer: Hearthstone Model: 8024

Project #: pf 20494 Run: 4 Tech: MM Reviewer: BO

RAW DRY GAS METER READINGS

		System 1st hour	System 1	System 2	Blank
Test	Final (Liter)	26 21 58	859 261 38	607 970 59	470 609 51
	Initial (Liter)	2609 44	858 099 64 ~~606 751 31~~ MM	606 751 31 ~~604 750~~ MM	469 704 10 ~~499~~ MM

AMBIENT CONDITIONS

	Before	After
Barometer (kPa):	101.4	101.0
Dry Bulb (F):	75.8	83.6
Humidity (%):	63.4	48.3

POLYTESTS
TESTING THROUGH YOUR REALITY

FUEL DATA

Date: 2023-10-05 Manufacturer: Hearthstone Model: 8034

Project #: pE 20194 Run: 4 Tech: MA Reviewer: DO

FUEL DESCRIPTION:

Type of wood:

PRE-TEST LOAD

Piece Size			Weight		Meter Moisture Content (% dry) *				
1 ¼	x 3 ¼	x 17 in.	2044	lbs.	20⁴	20³	20³	20⁸	20⁸
1 ¼	x 3 ¼	x 17 in.	2072	lbs.	20⁷	21⁰	21¹	21²	21²
1 ¼	x 3 ¼	x 17 in.	1926	lbs.	19⁵	20⁰	20¹	20³	20⁴
1 ¼	x 3 ¼	x 17 in.	1938	lbs.	21⁰	21¹	21³	21⁹	21⁸
1 ¼	x 3 ¼	x 12 in.	1318	lbs.	21³	21⁴	21⁸	21⁰	21¹
1 ¼	x 3 ¼	x 12 in.	1380	lbs.	21¹	21³	21⁴	21³	21³
1 ¼	x 3 ¼	x 12 in.	1164	lbs.	20⁸	20⁸	20⁹	20 7	20⁶
1 ¼	x 3 ¼	x 12 in.	1634	lbs.	20⁷	20⁹	21⁰	21⁰	21⁰
1 ¼	x 3 ¼	x 12 in.	1372	lbs.	19⁸	19⁸	19³	19⁸	19⁷
1 ¼	x 3 ¼	x 12 in.	1438	lbs.	19³	19³	19²	19³	19³
	x	x in.		lbs.					
	x	x in.		lbs.					
	x	x in.		lbs.					
	x	x in.		lbs.					
	x	x in.		lbs.					
	x	x in.		lbs.					
	x	x in.		lbs.					
	x	x in.		lbs.					
	x	x in.		lbs.					
	x	x in.		lbs.					
	x	x in.		lbs.					
	x	x in.		lbs.					
	x	x in.		lbs.					

TEST LOAD WEIGHT: 16 34 lbs

POLYTESTS
TESTING THROUGH YOUR REALITY

FUEL DATA

Date: 2021-10-05 Manufacturer: Hearthstone Model: 8024

Project #: PI 20294 Run: 4 Tech: MM Reviewer: DP

FUEL DESCRIPTION:

Type of wood:

TEST LOAD

Piece Size	Weight		Meter Moisture Content (% dry)*				
1 1/2 x 3 1/2 x 175 in.	1 868	lbs.	191	193	192	199	193
1 1/2 x 3 1/2 x 175 in.	1 892	lbs.	205	202	201	204	204
1 1/2 x 3 1/2 x 175 in.	1 688	lbs.	191	192	198	197	198
3 1/2 x 3 1/2 x 175 in.	4 268	lbs.	203	202	207	206	206
3 1/2 x 3 1/2 x 175 in.	4 286	lbs.	192	198	199	197	198
x x in.		lbs.					
1 1/2 x 3/4 x 5 in.	0 080	lbs.			191		
1 1/2 x 3/4 x 5 in.	0 118	lbs.			193		
1 1/2 x 3/4 x 5 in.	0 096	lbs.			194		
1 1/2 x 3/4 x 5 in.	0 098	lbs.			198		
1 1/2 x 3/4 x 5 in.	0 100	lbs.			193		
1 1/2 x 3/4 x 5 in.	0 116	lbs.			198		
1 1/2 x 3/4 x 5 in.	0 096	lbs.			199		
1 1/2 x 3/4 x 5 in.	0 086	lbs.			193		
1 1/2 x 3/4 x 5 in.	0 094	lbs.			194		
1 1/2 x 3/4 x 5 in.	0 088	lbs.			197		
1 1/2 x 3/4 x 5 in.	0 092	lbs.			198		
1 1/2 x 3/4 x 5 in.	0 110	lbs.			199		
1 1/2 x 3/4 x 5 in.	0 102	lbs.			201		
1 1/2 x 3/4 x 5 in.	0 114	lbs.			201		
1 1/2 x 3/4 x 5 in.	0 080	lbs.			20		
1 1/2 x 3/4 x 5 in.	0 100	lbs.			199		
x x in.		lbs.					
x x in.		lbs.					
x x in.		lbs.					
x x in.		lbs.					
x x in.		lbs.					

TEST LOAD WEIGHT: 15 57 lbs Min 20%: 311 Max 25%: 389

POLYTESTS

DILUTION TUNNEL PARTICULATE SAMPLER DATA

Date: 2023-10-05 Manufacturer: Pendulum Model: 8034

Project #: pt 2 294 Run: 4 Tech: MP Reviewer: BP

		TEST FILTERS					
		SYSTEM 1st hour MP			SYSTEM 1st hour MP		
Pre-test Weight Record		Probe & Housing Number	Front & Back Filter Number	gaskets	Probe & Housing Number	Front & Back Filter Number	gaskets
Date	Time	21	22-23	5	31	24-25	28
2023-10-04	17:00	108 73 71	0 24 41	35 48 05	110 12 76	0 24 29	34 56 02
2023-10-05	9:00	108 73 72	0 24 42	35 48 06	110 12 77	0 24 32	34 56 12

		TEST FILTERS					
		SYSTEM 1st hour			SYSTEM 1		
Post-test Weight Record		Probe & Housing Number	Front & Back Filter Number	gaskets	Probe & Housing Number	Front & Back Filter Number	gaskets
Date	Time	21	22-23	5	31	24-25	28
2023-10-05	15:30	108 73 74	0 24 45	35 48 29	110 12 79	0 24 32	34 56 36
2023-10-10	8:30	108 73 72	0 24 44	35 48 18	110 12 78	~~0 24 33~~ 0 24 34 MP	34 56 12
2023-10-11	8:00	108 73 72	0 24 42	35 48 18	110 12 78	0 24 30	34 56 08
2023-10-12	9:00	108 73 72	0 24 42	35 48 18	110 12 78	0 24 30	34 56 08

POLYTESTS
TESTING THROUGH YOUR REALITY

DILUTION TUNNEL PARTICULATE SAMPLER DATA

Date: 2023-10-05 Manufacturer: [illegible] Model: 8024

Project #: PI 2024 Run: 4 Tech: MM Reviewer: [illegible]

		TEST FILTERS			
		SYSTEM 2			
Pre-test Weight Record		Probe & Housing Number	Front & Back Filter Number	gaskets	Blank Filter
Date	Time	42	26 27	42	28
2023-10-04	17:00	110 3114	0 2436	34 6109	0 1225
2023-10-05	9:00	110 3115	0 2437	34 6110	0 1225

		TEST FILTERS				
		SYSTEM 2				
Post-test Weight Record		Probe & Housing Number	Front & Back Filter Number	gaskets	Blank Filter	End test time and date
Date	Time	42	26 27	42	28	2023-10-05
2023-10-05	15:30	110 3119	0 2439	34 6152	0 1228	15:00
2023-10-10	8:00	110 3116	0 2438	34 6120	0 1226	
2023-10-11	8:00	110 3116	0 2438	34 6120	0 1226	
2023-10-12	9:00	110 3116	0 2438	34 6120	0 1226	

Paramètres

Tous les facteurs de corrections et autres paramètres qui peuvent être modifiés par l'utilisateur du fichier sont regroupés ici.

Code verrouillage:	HEA	

Description du test

Test standard	EPA	
Run #	5	
Date	10-10-2023	
Technicien	M.M	
Project #	PI 20294	

Description de l'unité

Manufacturer	HEARTHSTONE	
Modèle	8024	
Combustion system	Cat	
Appliance type	WOOD STOVE	
Firebox volume	2,17	cu ft.
Appliance weight empty	n.a	lbs
Appliance weight full	n.a	lbs

Paramètres du test

Logging time	1	min
Manufacturer's rated heat output	n.a	BTU/h Donnée fournie par le manfacturier
Targeted category	1	
Targeted output	n.a	BTU/h
Cp steel	n.a	BTU/lb-°F

Échantillonnage

Blank sampling rate	0,20	cuft/min
Internal probe diameter	0,18	in.
Calibration Factor (DGM #1):	0,994	
Equipment number (DGM #1):	EM 178	Dimensionless
Calibration Factor (DGM #2):	0,995	
Equipment number (DGM #2):	EM 318	Dimensionless
Calibration Factor (DGM #3):	0,998	
Equipment number (DGM #3):	EM 179	Dimensionless
Calibration Factor (DGM 1st Hr):	0,998	
Equipment number (DGM 1st Hr):	EM 130	Dimensionless

Tunnel

Targeted tunnel flow rate	350	scfm
Tunnel diameter	8	in.
Molecular weight	29	29 as per ASTM E2515
Pitot tube type	Standard	
Pitot tube coefficient	0,99	Dimensionless

Project nu.	PI 20294
Date	10-10-2023
Technicien	M.M

Fuel data

Fuel type	Cord	
Fuel specie	D. Fir	
HHV	19810,0	kJ/kg
%C	48,7	
%H	6,9	
%O	43,9	
%Ash	0,5	
HHV	8519,2	Btu/lb
LHV	7451,0	Btu/lb

Default Fuel Values

	D. Fir	Oak/Maple
HHV	19 810	19 887
%C	48,73	50
%H	6,87	6,6
%O	43,9	42,9
%Ash	0,5	0,5
HHV (Btu/lb)	8519	8552
LHV (Btu/lb)	7451	7480

	Start	End
Barometer (kPa):	100	100,1
Barometer (in.Hg):	29,529989	29,55951897
Dry Bulb (F):	70,6	73,1
Humidity (%):	45,1	46,8
Air velocity (ft/min)	0	0

DGM #1st hour	Final:	2634,110	cuft	Final:	2634,110	cuft
	Initial:	2621,900	cuft	Initial:	2621,900	cuft
DGM #1	Final:	30413,978	cuft	Final:	861227,940	Liter
	Initial:	30344,615	cuft	Initial:	859263,800	Liter
DGM #2	Final:	21543,936	cuft	Final:	610056,310	Liter
	Initial:	21470,372	cuft	Initial:	607973,210	Liter
DGM room	Final:	16674,291	cuft	Final:	472163,340	Liter
	Initial:	16619,490	cuft	Initial:	470611,550	Liter

Numéro de la ligne dans "Raw data" à partir duquel les données du VRAI test commencent: 401

Autres données à rentrer: dans preload data, load data, traverse et filter set weight

Project nu.	PI 20294
Date	10-10-2023
Technicien	M.M

Preload data sheet

Test Load Weight:

Lower	Ideal	Upper
13,67	15,19	16,71

Load Volume: 0,4314 cu. ft

Loading Density: 7,668 lbs./ft3

Number of Spaces:

Spacer weight (lbs):

Load Density (wet): 38,570 lbs./ft3

Dry Wood Density: 32,003991

Piece Size (in): Thick	Wide	x Length	Weight lbs	Meter Moisture Content Dry Uncorrected %					Ave. MC x Weight	Volume Cubic Inches
1,5	3,5	17,5	2,148	19,6	19,4	20,1	20	20,1	42,61632	91,88
1,5	3,5	17,5	2,124	19,3	19,4	19,8	19,6	19,7	41,54544	91,88
1,5	3,5	17,5	1,972	20	20,1	20,3	20,2	20,1	39,71608	91,88
1,5	3,5	17,5	2,062	20,6	20,3	20,4	20,4	20,3	42,0648	91,88
1,5	3,5	12	1,468	20,9	21	21,1	21,3	21,4	31,03352	63,00
1,5	3,5	12	1,406	20,6	20,7	20,7	20,7	20,6	29,04796	63,00
1,5	3,5	12	1,42	19,9	19,3	19,2	19,4	19,4	27,6048	63,00
1,5	3,5	12	1,286	21	21,1	21,8	22	21,9	27,72616	63,00
1,5	3,5	12	1,454	21	21	21,8	21,7	21,7	31,17376	63,00
1,5	3,5	12	1,3	22	22,1	22,3	22,3	22,3	28,86	63,00
										0,00
										0,00
										0

FUEL LOAD DATA SHEET, CSA B415

Test Load Weight:

Lower	Ideal	Upper
13,7	15,2	16,7

* For boilers, a loading density factor of 10 lb/ft3 is applied

Load Volume: 0,41 cu. ft

Loading Density: 7,3 lbs./ft3

Number of Spaces: 16

Spacer weight: lbs

Load Density (wet): 34,9 lbs./ft3

Dry Wood Density: 29,0 lbs./ft3

Piece Size (in): Thick	Wide	Length	Weight lbs	Meter Moisture Content Dry Uncorrected %					Ave. MC x Weight	Volume Cubic Inches	Ave. MC %	
1,5	3,5	17,5	1,90	20,10	20,60	20,30	20,40	20,30	38,646	91,88	20,3	
1,5	3,5	17,5	1,76	22,30	22,40	22,80	22,40	22,30	39,44052	91,88	22,4	
1,5	3,5	17,5	1,75	21,80	21,30	21,20	21,00	21,40	37,345	91,88	21,3	
3,5	3,5	17,5	4,31	19,60	19,80	19,30	19,00	19,20	84,3036	214,38	19,6	Load
3,5	3,5	17,5	4,49	19,10	19,00	19,20	19,20	19,10	85,81056	214,38	19,1	
										0,00		
										0,00		
										0,00		
1,5	0,75	5	0,11			19,10			2,1774	5,63	19,1	
1,5	0,75	5	0,09			19,30			1,6984	5,63	19,3	
1,5	0,75	5	0,09			19,40			1,8236	5,63	19,4	
1,5	0,75	5	0,09			19,90			1,7512	5,63	19,9	
1,5	0,75	5	0,08			20,00			1,56	5,63	20,0	
1,5	0,75	5	0,11			20,60			2,2248	5,63	20,6	
1,5	0,75	5	0,10			20,30			2,03	5,63	20,3	
1,5	0,75	5	0,10			19,60			1,96	5,63	19,6	
1,5	0,75	5	0,12			19,80			2,4156	5,63	19,8	
1,5	0,75	5	0,12			19,90			2,4678	5,63	19,9	
1,5	0,75	5	0,08			19,40			1,552	5,63	19,4	
1,5	0,75	5	0,12			19,10			2,292	5,63	19,1	
1,5	0,75	5	0,12			19,10			2,2156	5,63	19,1	
1,5	0,75	5	0,11			19,30			2,0844	5,63	19,3	
1,5	0,75	5	0,10			19,40			1,94	5,63	19,4	spacers
1,5	0,75	5	0,09			20,00			1,76	5,63	20,0	
										0,00		
										0,00		
										0,00

Tunnel Traverse Worksheet (for velocity calculations)

Static Pressure: 0,18 in. H20
Barometer: 29,900 in. Hg

Pour un tunnel de 12" et plus, prendre 6 lectures

	TUNNEL VELOCITY	TUNNEL TEMP	SQUARE ROOT
	In. wc	°F	
A center			0,0000
B center			0,0000
A1			0,0000
A2			0,0000
A3			0,0000
A4			0,0000
A5			0,0000
A6			0,0000
B1			0,0000
B2			0,0000
B3			0,0000
B4			0,0000
B5			0,0000
B6			0,0000
AVERAGE	#DIV/0!	#DIV/0!	0,0000

PITOT CONSTANT=
0,948

Pour un tunnel moins de 12", prendre 4 lectures

	TUNNEL VELOCITY	TUNNEL TEMP	SQUARE ROOT
	In. wc	°F	
A center	0,074	68,27	0,2720
B center	0,074	68,29	0,2720
A1	0,060	68,27	0,2449
A2	0,072	68,25	0,2683
A3	0,070	68,25	0,2646
A4	0,060	68,27	0,2449
B1	0,059	68,3	0,2429
B2	0,071	68,3	0,2665
B3	0,066	68,3	0,2569
B4	0,060	68,3	0,2449
AVERAGE	0,0666	68,2820	0,2578

Project nu.	PI 20294
Date	10-10-2023
Technicien	M.M

Filter set weight

	System 1 (g) 1st hour			System 1 (g)			System 2 (g)			Ambient blank (g)	Date	Heure	Test end date & time
	probe	front/ Back	gasket	probe	front/ Back	gasket	probe	front/ Back	gasket	Filter			
Number	004	29-30	32	007	31-32	44	33	101-102	45	33			
Before (1)													
Before (2)													
Before (3)													
Before (4)													
Before (5)	61,3964	0,2449	34,3968	61,4730	0,2440	33,6616	109,3633	0,2426	34,2639	0,1216	2023-10-05	20:00	
Before (6)	61,3965	0,2450	34,3968	61,4731	0,2439	33,6617	109,3634	0,2425	34,2638	0,1217	2023-10-10	10:00	
After (1)	61,3970	0,2466	34,3996	61,4739	0,2492	33,6648	109,3641	0,2472	34,2669	0,1219	2023-10-10	22:00	
After (2)	61,3966	0,2483	34,3974	61,4732	0,2490	33,6620	109,3635	0,2472	34,2648	0,1218	2023-10-16	08:00	
After (3)	61,3966	0,2483	34,3974	61,4732	0,2490	33,6620	109,3635	0,2472	34,2648	0,1218	2023-10-17	08:00	2023-10-10 21:15
After (4)													
After (5)													
After (6)	61,3966	0,2483	34,3974	61,4732	0,2490	33,6620	109,3635	0,2472	34,2648	0,1218	2023-10-17	08:00	
Difference	0,0001	0,0033	0,0006	0,0001	0,0051	0,0003	0,0001	0,0047	0,0010	0,0001			
Total (mg)		4			5,5			5,8		0,1			
Total ajusté (mg)		**3,90**			**5,40**			**5,70**					

Project nu.	PI 20294
Date	10-10-2023
Technicien	M.M

Manufacturer: HEARTHSTONE
Model: 8024

Run: 5
Project #: PI 20294
Test Duration: 384 min

	HHV	LHV
Eff	77,93%	84,25%
Comb Eff	98,26%	98,26%
HT Eff	79,29%	85,86%
Output	14 439	Btu/h
Burn Rate	2,06	kg/h
Grams CO	184	g
Input	18 523	Btu/h
MC wet	16,70	

Note: In the "Input data", "Calc. % O_2", "Fuel Properties", and "Mass Balance" columns, [a], [d], [g], [k], [b], [c], [h], [u], [w], [j], and [k] refer to their respective variables in Clauses

Ultimate CO_2
$CO_{2,ult}$ 19,64
F_0
1,060

Overall Heating Efficiency: 77,93%
Combustion Efficiency: 98,26%
Heat Transfer Efficiency: 79,29%

Heat Output: 13 687 Btu/h
Heat Input: 17 571 Btu/h
Burn Duration: 6,40 h
Burn Rate: 2,05 lb/h
Stack Temp: 287,6 Deg. F

	Averages	0,20	8,43	1,80	20,37	13,38	142,02	22,14	0,98	0,79	0,78
INPUT DATA				Oxygen Calculation			Input Data		Combust	Heat	Net
Elapsed Time	Weight Remaining (kg)	% CO [e]	% CO_2 [X]	Excess Air EA	Total O_2	Calc. % O_2 [g]	Flue Gas (°C)	Room Temp (°C)	Eff %	Transfer %	Eff %
0,00	7,38	0,06	3,09	520,3%	20,73	17,80	157,6	21,7	99,4%	82,3%	82,0%
1,00	7,11	0,14	3,32	469,0%	20,71	17,32	160,7	21,7	98,1%	83,6%	82,3%
2,00	7,11	0,04	4,39	324,1%	20,63	16,03	168,7	21,7	100,3%	69,2%	69,3%
3,00	7,03	0,04	5,09	282,7%	20,60	15,49	177,5	21,8	100,2%	70,0%	70,1%
4,00	7,02	0,04	7,06	176,7%	20,47	13,39	180,3	21,9	100,1%	74,3%	74,4%
5,00	6,98	0,03	8,21	125,6%	20,39	12,07	186,9	21,9	100,1%	76,4%	76,5%
6,00	6,93	0,04	5,34	265,2%	20,58	15,23	164,3	22,0	100,2%	72,5%	72,6%
7,00	6,93	0,03	3,07	534,7%	20,74	17,65	153,1	21,9	100,9%	63,1%	63,7%
8,00	6,93	0,03	2,65	634,0%	20,76	18,10	145,3	21,9	101,2%	61,0%	61,7%
9,00	6,89	0,03	2,62	643,1%	20,77	18,14	140,1	22,0	101,2%	61,9%	62,6%
10,00	6,89	0,03	2,63	639,6%	20,76	18,12	136,3	21,9	101,1%	62,9%	63,6%
11,00	6,84	0,03	2,68	629,1%	20,76	18,08	133,1	21,9	100,9%	64,0%	64,6%
12,00	6,84	0,04	2,75	604,0%	20,75	17,99	130,8	21,8	100,7%	65,3%	65,8%
13,00	6,80	0,05	2,86	576,0%	20,75	17,87	129,3	21,7	100,4%	66,3%	66,6%
14,00	6,80	0,06	2,98	550,4%	20,74	17,75	127,9	21,8	100,1%	67,6%	67,6%
15,00	6,80	0,08	3,09	519,0%	20,73	17,60	126,8	21,9	99,4%	68,7%	68,3%
16,00	6,80	0,10	3,16	501,4%	20,72	17,51	125,6	22,0	98,9%	69,3%	68,6%
17,00	6,79	0,12	3,25	482,9%	20,72	17,41	124,7	21,9	98,5%	70,1%	69,0%
18,00	6,75	0,14	3,32	467,8%	20,71	17,32	124,0	21,7	98,1%	70,6%	69,2%
19,00	6,75	0,16	3,40	450,9%	20,70	17,22	123,1	21,9	97,6%	71,1%	69,4%
20,00	6,70	0,18	3,50	434,3%	20,70	17,11	122,4	21,8	97,3%	71,7%	69,8%
21,00	6,70	0,19	3,65	411,9%	20,69	16,95	121,8	21,8	97,1%	72,6%	70,4%
22,00	6,66	0,21	3,77	393,4%	20,68	16,80	121,8	21,8	96,7%	73,0%	70,6%
23,00	6,66	0,23	3,81	388,2%	20,67	16,75	121,3	21,8	96,5%	73,2%	70,7%
24,00	6,61	0,24	3,85	379,0%	20,67	16,69	121,4	21,8	96,2%	73,4%	70,7%
25,00	6,61	0,25	3,84	380,3%	20,67	16,71	120,9	21,8	96,0%	73,4%	70,4%
26,00	6,57	0,27	3,91	372,2%	20,66	16,62	120,4	21,8	95,7%	73,8%	70,6%
27,00	6,57	0,30	3,97	360,9%	20,66	16,54	119,9	21,8	95,2%	74,0%	70,5%
28,00	6,57	0,32	4,03	351,6%	20,65	16,46	118,8	21,8	94,9%	74,3%	70,5%
29,00	6,52	0,34	4,11	341,9%	20,65	16,37	118,6	21,8	94,7%	74,6%	70,6%
30,00	6,52	0,36	4,12	337,9%	20,64	16,34	119,3	21,7	94,3%	74,6%	70,3%
31,00	6,48	0,38	4,22	327,0%	20,64	16,23	119,7	21,8	94,0%	74,9%	70,4%
32,00	6,48	0,39	4,27	321,4%	20,63	16,17	119,6	21,7	93,9%	75,0%	70,4%
33,00	6,43	0,39	4,41	309,0%	20,62	16,02	119,6	21,8	94,3%	75,5%	71,0%
34,00	6,43	0,41	4,50	300,3%	20,62	15,91	120,1	21,8	94,0%	75,7%	71,1%
35,00	6,39	0,39	4,79	280,6%	20,60	15,63	120,6	21,8	94,6%	76,4%	72,2%
36,00	6,39	0,39	5,17	253,5%	20,57	15,21	121,3	21,9	94,9%	77,2%	73,3%
37,00	6,34	0,40	5,43	236,4%	20,55	14,92	122,3	21,8	94,9%	77,6%	73,7%
38,00	6,34	0,41	5,75	218,9%	20,53	14,58	124,7	21,9	95,0%	78,0%	74,1%
39,00	6,30	0,46	7,12	159,0%	20,44	13,09	127,4	21,9	95,4%	78,7%	75,2%
40,00	6,25	0,39	7,42	151,0%	20,42	12,81	129,9	21,8	96,3%	78,9%	75,9%
41,00	6,21	0,33	7,63	147,0%	20,41	12,62	132,8	21,8	97,0%	78,9%	77,3%
42,00	6,16	0,23	7,22	163,5%	20,45	13,11	133,9	21,8	97,9%	79,4%	77,7%
43,00	6,16	0,21	6,71	184,0%	20,48	13,67	135,0	21,8	98,0%	79,6%	77,2%
44,00	6,11	0,18	6,90	178,7%	20,47	13,50	137,0	21,8	98,7%	78,7%	77,7%
45,00	6,07	0,11	7,57	155,9%	20,43	12,81	138,3	21,9	99,3%	79,5%	78,9%
46,00	6,07	0,09	8,03	141,0%	20,40	12,33	140,3	21,8	99,5%	79,6%	79,4%
47,00	6,02	0,09	7,93	145,0%	20,41	12,44	141,1	21,8	99,5%	79,6%	79,2%
48,00	5,98	0,09	7,86	147,0%	20,41	12,51	142,4	21,8	99,5%	79,4%	79,0%
49,00	5,93	0,09	7,70	152,1%	20,43	12,68	142,5	21,8	99,5%	79,2%	78,8%
50,00	5,93	0,10	7,75	150,3%	20,42	12,63	144,0	21,8	99,4%	79,2%	78,7%
51,00	5,89	0,11	7,73	150,7%	20,42	12,64	145,3	21,9	99,3%	79,0%	78,5%
52,00	5,84	0,10	7,80	148,6%	20,42	12,57	145,7	21,8	99,4%	79,1%	78,6%
53,00	5,84	0,11	7,98	142,0%	20,41	12,37	146,8	21,8	99,3%	79,2%	78,7%
54,00	5,80	0,10	8,52	123,3%	20,38	12,01	147,8	21,8	99,4%	79,5%	79,1%
55,00	5,75	0,10	9,11	113,4%	20,33	11,18	149,3	21,9	99,4%	80,2%	79,7%
56,00	5,71	0,10	9,71	100,1%	20,29	10,53	150,7	21,8	99,4%	80,6%	80,1%
57,00	5,66	0,10	10,21	90,6%	20,28	10,00	151,3	21,9	99,5%	80,9%	80,5%
58,00	5,66	0,12	9,79	98,3%	20,29	10,44	153,2	21,8	99,3%	80,5%	79,9%
59,00	5,62	0,10	9,60	102,2%	20,30	10,65	154,1	21,9	99,4%	80,2%	79,8%
60,00	5,57	0,10	9,45	105,0%	20,31	10,81	155,5	21,9	99,4%	80,0%	79,5%
61,00	5,52	0,10	9,68	100,9%	20,29	10,56	156,4	22,0	99,5%	80,2%	79,7%
62,00	5,51	0,08	9,66	101,1%	20,29	10,57	156,1	21,9	99,6%	80,2%	79,8%
63,00	5,48	0,08	9,80	98,9%	20,29	10,45	156,1	21,9	99,6%	80,3%	80,0%
64,00	5,43	0,08	9,97	97,3%	20,28	10,38	156,1	21,8	99,7%	80,3%	80,1%
65,00	5,39	0,08	9,93	96,3%	20,29	10,31	155,9	21,9	99,7%	80,4%	80,1%
66,00	5,34	0,07	10,25	90,3%	20,26	9,98	156,1	21,9	99,7%	80,6%	80,4%
67,00	5,30	0,07	10,91	78,8%	20,21	9,27	155,9	21,9	99,7%	81,1%	80,9%
68,00	5,30	0,08	11,88	64,3%	20,15	8,22	155,7	21,9	99,7%	81,7%	81,5%
69,00	5,25	0,08	11,95	63,3%	20,15	8,16	155,7	21,9	99,6%	81,9%	81,5%
70,00	5,19	0,08	11,97	63,0%	20,14	8,14	156,6	21,9	99,6%	81,7%	81,4%
71,00	5,16	0,11	12,81	52,1%	20,09	7,22	156,5	21,9	99,5%	82,2%	81,7%
72,00	5,12	0,06	12,33	58,8%	20,12	7,75	157,1	21,9	99,6%	81,9%	81,7%
73,00	5,07	0,05	11,34	72,4%	20,19	8,82	157,3	21,8	99,6%	81,3%	81,2%
74,00	5,03	0,09	10,16	91,7%	20,26	10,06	157,2	21,8	99,5%	80,5%	80,1%
75,00	4,98	0,16	9,90	95,2%	20,28	10,29	160,6	21,8	98,9%	80,0%	79,2%
76,00	4,94	0,13	10,29	88,7%	20,25	9,91	161,9	21,7	99,3%	80,3%	79,7%
77,00	4,90	0,12	11,40	70,5%	20,18	8,72	162,3	21,8	99,3%	81,0%	80,5%
78,00	4,89	0,23	12,52	54,0%	20,10	7,48	161,3	21,8	98,6%	81,7%	80,6%
79,00	4,84	0,30	11,70	63,7%	20,15	8,30	164,3	21,7	98,1%	81,0%	79,4%
80,00	4,80	0,33	11,70	63,8%	20,15	8,28	168,9	21,7	97,9%	80,8%	79,1%
81,00	4,75	0,33	11,81	61,7%	20,14	8,18	170,0	21,7	97,9%	80,7%	79,0%
82,00	4,71	0,37	11,97	59,3%	20,13	7,98	172,7	21,8	97,7%	80,6%	78,7%
83,00	4,66	0,39	12,10	57,3%	20,12	7,83	174,9	21,8	97,5%	80,6%	78,6%
84,00	4,62	0,42	12,20	55,7%	20,11	7,70	177,1	21,8	97,3%	80,5%	78,3%
85,00	4,58	0,42	12,21	55,5%	20,11	7,68	178,8	21,8	97,3%	80,4%	78,3%
86,00	4,57	0,43	12,24	55,1%	20,10	7,65	179,6	21,8	97,3%	80,4%	78,2%
87,00	4,53	0,41	12,26	55,1%	20,10	7,64	181,0	21,9	97,4%	80,3%	78,2%
88,00	4,48	0,40	12,29	54,8%	20,10	7,61	182,1	21,9	97,5%	80,3%	78,3%
89,00	4,43	0,37	12,29	55,1%	20,10	7,63	182,7	21,9	97,7%	80,2%	78,4%
90,00	4,39	0,36	12,25	55,6%	20,11	7,67	183,4	21,9	97,8%	80,2%	78,4%
91,00	4,35	0,35	12,29	55,4%	20,11	7,64	184,3	21,9	97,8%	80,1%	78,4%
92,00	4,30	0,33	12,30	54,5%	20,10	7,58	184,9	22,0	97,9%	80,2%	78,5%

93,00	4,30	0,31	12,43	34,0%	20,10	7,31	185,3	21,9	99,0%	80,2%	78,6%
94,00	4,29	0,31	12,44	33,8%	20,10	7,46	185,7	21,9	99,0%	80,2%	78,5%
95,00	4,21	0,31	12,46	33,4%	20,09	7,45	186,6	21,9	99,0%	80,1%	78,5%
96,00	4,16	0,31	12,48	33,2%	20,09	7,44	187,4	22,0	99,0%	80,1%	78,5%
97,00	4,12	0,31	12,54	32,8%	20,09	7,38	187,5	21,9	99,0%	80,1%	78,5%
98,00	4,07	0,31	12,59	32,3%	20,09	7,33	188,1	21,9	99,0%	80,1%	78,5%
99,00	4,03	0,32	12,59	32,3%	20,09	7,34	188,7	22,0	99,1%	80,1%	78,5%
100,00	3,98	0,32	12,62	31,9%	20,09	7,30	189,2	22,0	99,1%	80,1%	78,5%
101,00	3,93	0,31	12,64	31,7%	20,09	7,29	189,4	21,9	99,1%	80,1%	78,6%
102,00	3,91	0,31	12,62	31,9%	20,09	7,31	189,4	22,0	99,1%	80,1%	78,6%
103,00	3,88	0,31	12,62	31,9%	20,09	7,31	189,4	22,0	99,1%	80,1%	78,6%
104,00	3,85	0,31	12,62	31,9%	20,09	7,31	189,0	22,0	99,1%	80,0%	78,6%
105,00	3,82	0,30	12,60	32,1%	20,09	7,33	188,5	22,0	99,1%	80,1%	78,6%
106,00	3,80	0,30	12,60	32,1%	20,09	7,34	188,4	22,0	99,1%	80,1%	78,6%
107,00	3,76	0,30	12,65	31,7%	20,09	7,28	189,1	22,1	99,1%	80,1%	78,7%
108,00	3,71	0,30	12,66	31,6%	20,09	7,14	189,5	22,1	99,1%	80,1%	78,7%
109,00	3,68	0,30	12,65	31,7%	20,09	7,29	189,8	22,1	99,1%	80,1%	78,7%
110,00	3,66	0,30	12,70	31,1%	20,08	7,23	189,9	22,1	99,1%	80,1%	78,7%
111,00	3,57	0,30	12,74	30,7%	20,08	7,20	190,1	22,1	99,2%	80,1%	78,7%
112,00	3,57	0,30	12,73	30,8%	20,08	7,20	190,1	22,2	99,2%	80,1%	78,7%
113,00	3,53	0,30	12,83	29,8%	20,07	7,09	190,0	22,2	99,2%	80,2%	78,7%
114,00	3,48	0,30	12,90	29,2%	20,07	7,01	189,3	22,3	99,2%	80,2%	78,8%
115,00	3,44	0,30	12,93	28,9%	20,07	6,98	189,6	22,1	99,2%	80,2%	78,8%
116,00	3,39	0,31	12,95	28,7%	20,06	6,96	189,8	22,3	99,2%	80,2%	78,8%
117,00	3,36	0,31	13,00	27,9%	20,06	6,93	189,6	22,3	99,2%	80,2%	78,8%
118,00	3,35	0,31	13,02	27,4%	20,06	6,89	189,8	22,3	99,2%	80,2%	78,8%
119,00	3,30	0,31	13,05	27,0%	20,06	6,86	190,2	22,2	99,2%	80,2%	78,8%
120,00	3,26	0,32	13,05	27,0%	20,06	6,86	190,3	22,3	99,2%	80,2%	78,8%
121,00	3,21	0,32	13,06	26,8%	20,06	6,83	190,4	22,3	99,2%	80,2%	78,8%
122,00	3,18	0,32	13,10	26,4%	20,05	6,80	190,2	22,1	99,2%	80,2%	78,8%
123,00	3,16	0,32	13,10	26,4%	20,05	6,80	190,0	22,1	99,2%	80,2%	78,8%
124,00	3,13	0,32	13,16	25,8%	20,05	6,75	190,3	22,3	99,2%	80,2%	78,8%
125,00	3,07	0,32	13,17	25,7%	20,05	6,72	189,9	22,3	99,2%	80,2%	78,9%
126,00	3,03	0,32	13,15	25,9%	20,05	6,74	189,9	22,3	99,2%	80,2%	78,9%
127,00	3,03	0,32	13,13	26,0%	20,05	6,76	190,1	22,1	99,2%	80,2%	78,8%
128,00	2,98	0,32	13,18	25,5%	20,05	6,74	190,0	22,3	99,2%	80,2%	78,9%
129,00	2,94	0,32	13,15	25,8%	20,05	6,78	190,1	22,3	99,2%	80,2%	78,9%
130,00	2,88	0,32	13,15	25,8%	20,05	6,80	190,4	22,4	99,2%	80,2%	78,9%
131,00	2,89	0,32	13,15	25,8%	20,05	6,79	189,9	22,3	99,2%	80,2%	78,9%
132,00	2,83	0,32	13,12	26,1%	20,05	6,78	189,6	22,3	99,2%	80,2%	78,9%
133,00	2,80	0,32	13,13	26,0%	20,05	6,78	189,8	22,2	99,2%	80,2%	78,9%
134,00	2,76	0,32	13,13	26,0%	20,05	6,76	189,6	22,4	99,2%	80,2%	78,9%
135,00	2,76	0,32	13,13	26,0%	20,05	6,76	189,7	22,3	99,2%	80,2%	78,9%
136,00	2,71	0,32	13,16	25,8%	20,05	6,73	189,8	22,3	99,2%	80,2%	78,9%
137,00	2,67	0,32	13,21	25,3%	20,05	6,68	190,1	22,3	99,2%	80,2%	78,9%
138,00	2,62	0,32	13,20	25,3%	20,05	6,68	190,0	22,3	99,2%	80,2%	78,9%
139,00	2,57	0,32	13,20	25,3%	20,05	6,68	189,6	22,4	99,2%	80,2%	78,9%
140,00	2,57	0,31	13,23	24,9%	20,04	6,65	189,8	22,3	99,2%	80,2%	78,9%
141,00	2,53	0,31	13,30	24,2%	20,04	6,57	189,7	22,3	99,2%	80,2%	78,9%
142,00	2,48	0,31	13,32	24,1%	20,04	6,55	189,7	22,3	99,2%	80,2%	78,9%
143,00	2,48	0,31	13,26	24,6%	20,04	6,59	189,9	22,3	97,9%	80,4%	78,9%
144,00	2,44	0,31	13,19	25,2%	20,05	6,68	189,6	22,3	99,2%	80,4%	78,9%
145,00	2,38	0,31	13,12	25,8%	20,05	6,76	189,6	22,3	99,2%	80,4%	78,9%
146,00	2,35	0,31	13,08	26,2%	20,05	6,80	189,7	22,3	99,2%	80,3%	78,9%
147,00	2,31	0,31	13,00	27,0%	20,06	6,88	189,6	22,4	99,2%	80,3%	78,9%
148,00	2,30	0,31	12,96	27,3%	20,06	6,94	189,6	22,4	99,2%	80,3%	78,9%
149,00	2,30	0,31	12,79	29,0%	20,08	7,16	189,6	22,4	99,2%	80,2%	78,9%
150,00	2,26	0,30	12,65	31,0%	20,08	7,28	189,4	22,3	99,2%	80,1%	78,7%
151,00	2,21	0,29	12,54	32,0%	20,09	7,40	189,2	22,4	99,2%	80,1%	78,6%
152,00	2,17	0,29	12,46	32,8%	20,10	7,46	188,7	22,4	99,2%	80,0%	78,6%
153,00	2,17	0,28	12,39	33,5%	20,10	7,57	188,4	22,4	99,2%	80,0%	78,6%
154,00	2,12	0,28	12,39	33,5%	20,10	7,57	187,7	22,4	99,2%	80,1%	78,7%
155,00	2,08	0,28	12,36	33,7%	20,11	7,71	187,3	22,4	99,2%	80,0%	78,6%
156,00	2,08	0,27	12,13	35,8%	20,12	7,88	188,4	22,4	99,2%	80,0%	78,6%
157,00	2,03	0,26	12,01	37,0%	20,13	7,98	188,0	22,3	99,2%	79,9%	78,6%
158,00	2,03	0,26	11,90	38,0%	20,14	8,11	188,2	22,4	99,2%	79,9%	78,6%
159,00	1,98	0,25	11,83	38,8%	20,14	8,19	188,9	22,4	99,2%	79,9%	78,6%
160,00	1,98	0,25	11,75	39,7%	20,15	8,27	188,5	22,3	99,2%	79,9%	78,6%
161,00	1,94	0,25	11,80	39,2%	20,16	8,44	188,5	22,3	99,2%	79,9%	78,5%
162,00	1,89	0,24	11,80	39,2%	20,16	8,34	188,8	22,3	99,2%	79,9%	78,5%
163,00	1,89	0,24	11,43	42,9%	20,17	8,62	188,1	22,4	99,2%	79,9%	78,5%
164,00	1,85	0,24	11,43	42,9%	20,17	8,63	187,3	22,4	99,2%	79,9%	78,6%
165,00	1,85	0,24	11,44	42,9%	20,17	8,61	187,0	22,4	99,2%	79,9%	78,6%
166,00	1,80	0,24	11,52	42,0%	20,16	8,52	186,9	22,3	99,2%	79,9%	78,7%
167,00	1,80	0,24	11,60	41,2%	20,16	8,44	186,0	22,4	99,2%	80,0%	78,8%
168,00	1,76	0,23	11,60	41,2%	20,16	8,42	179,8	22,5	99,2%	80,0%	78,8%
169,00	1,76	0,23	11,58	41,4%	20,16	8,40	179,2	22,5	99,2%	80,1%	78,8%
170,00	1,71	0,23	11,64	40,8%	20,16	8,40	178,4	22,5	99,2%	80,1%	78,9%
171,00	1,69	0,23	11,75	39,7%	20,15	8,27	178,2	22,4	99,2%	80,2%	78,9%
172,00	1,67	0,23	11,89	38,3%	20,14	8,11	178,2	22,3	99,2%	80,3%	78,9%
173,00	1,67	0,23	11,95	37,8%	20,13	8,06	178,1	22,5	99,2%	80,3%	78,9%
174,00	1,62	0,23	11,98	37,5%	20,13	8,48	177,5	22,4	99,2%	80,3%	78,9%
175,00	1,58	0,24	11,34	43,7%	20,18	8,72	178,7	22,5	99,2%	80,0%	78,8%
176,00	1,58	0,24	11,25	44,6%	20,18	8,81	178,3	22,5	99,2%	80,0%	78,8%
177,00	1,58	0,24	11,23	44,8%	20,18	8,83	178,6	22,5	99,2%	80,0%	78,8%
178,00	1,53	0,24	11,14	45,7%	20,19	8,94	179,1	22,4	99,2%	80,0%	78,8%
179,00	1,53	0,23	10,89	48,2%	20,21	9,20	174,8	22,5	99,1%	79,8%	78,7%
180,00	1,51	0,23	10,83	48,8%	20,24	9,71	173,9	22,5	99,0%	79,8%	78,4%
181,00	1,49	0,23	10,81	49,0%	20,25	9,94	173,6	22,5	99,0%	79,8%	78,3%
182,00	1,44	0,23	10,82	49,0%	20,27	10,15	173,4	22,5	99,1%	79,8%	78,3%
183,00	1,44	0,19	8,82	99,3%	20,28	10,37	170,5	22,4	99,1%	79,2%	78,2%
184,00	1,44	0,19	8,72	99,3%	20,28	10,47	169,3	22,5	99,1%	79,2%	78,2%
185,00	1,39	0,19	8,60	100,7%	20,29	10,60	168,0	22,4	99,1%	79,2%	78,2%
186,00	1,39	0,18	8,50	102,0%	20,30	10,71	167,0	22,4	99,1%	79,2%	78,2%
187,00	1,39	0,18	8,46	102,5%	20,30	10,76	166,7	22,5	99,1%	79,2%	78,2%
188,00	1,35	0,19	8,44	102,7%	20,30	10,77	164,7	22,5	99,1%	79,2%	78,2%
189,00	1,35	0,19	8,43	102,7%	20,30	10,78	163,7	22,5	99,1%	79,4%	78,2%
190,00	1,35	0,19	8,47	102,2%	20,30	10,73	162,7	22,5	99,0%	79,3%	78,4%
191,00	1,35	0,19	8,48	102,0%	20,30	10,75	161,7	22,5	99,0%	79,3%	78,3%
192,00	1,30	0,18	8,56	112,0%	20,33	11,18	162,8	22,5	99,1%	79,2%	78,2%
193,00	1,30	0,17	8,58	121,9%	20,36	11,58	159,5	22,5	99,2%	79,0%	78,0%
194,00	1,30	0,17	8,58	124,8%	20,36	11,60	158,2	22,5	99,2%	79,0%	78,0%
195,00	1,26	0,17	8,46	127,0%	20,37	11,80	157,2	22,5	99,2%	78,9%	77,9%
196,00	1,26	0,17	8,32	131,3%	20,38	11,97	155,8	22,5	99,2%	78,9%	77,8%
197,00	1,26	0,16	8,23	134,1%	20,39	12,08	154,7	22,5	99,2%	78,8%	77,8%
198,00	1,26	0,16	8,11	137,4%	20,39	12,20	153,4	22,5	99,2%	78,8%	77,8%
199,00	1,26	0,16	8,03	139,9%	20,40	12,29	152,5	22,5	99,2%	78,8%	77,8%
200,00	1,21	0,16	7,94	142,3%	20,40	12,38	152,8	22,5	99,2%	78,8%	77,8%
201,00	1,21	0,16	7,86	144,6%	20,41	12,46	148,5	22,5	99,2%	78,9%	77,9%
202,00	1,21	0,16	7,84	145,4%	20,41	12,48	148,3	22,5	99,2%	78,9%	78,0%
203,00	1,21	0,16	7,78	147,0%	20,42	12,56	147,1	22,5	99,2%	78,9%	77,9%
204,00	1,21	0,16	7,76	147,9%	20,42	12,57	145,7	22,4	99,2%	79,1%	78,1%
205,00	1,17	0,16	7,75	148,4%	20,42	12,59	144,5	22,5	99,2%	79,1%	78,1%
206,00	1,17	0,16	7,70	150,0%	20,43	12,64	143,4	22,5	99,2%	79,2%	78,2%

207,00	1,17	0,16	7,63	152,0%	20,43	12,71	142,6	22,5	90,7%	79,2%	78,2%
208,00	1,17	0,16	7,62	152,6%	20,43	12,73	141,8	22,4	90,7%	79,2%	78,2%
209,00	1,17	0,16	7,58	153,6%	20,43	12,76	140,8	22,5	90,7%	79,3%	78,2%
210,00	1,17	0,16	7,57	154,2%	20,43	12,78	139,8	22,5	90,7%	79,3%	78,3%
211,00	1,12	0,16	7,58	153,7%	20,43	12,77	139,3	22,5	90,7%	79,4%	78,4%
212,00	1,12	0,16	7,58	153,7%	20,43	12,77	138,4	22,5	90,7%	79,5%	78,5%
213,00	1,12	0,16	7,53	155,3%	20,43	12,82	137,7	22,5	90,7%	79,5%	78,4%
214,00	1,12	0,16	7,50	156,3%	20,43	12,85	137,1	22,4	90,7%	79,5%	78,5%
215,00	1,12	0,16	7,48	156,9%	20,44	12,87	136,9	22,5	90,7%	79,5%	78,5%
216,00	1,12	0,16	7,45	158,0%	20,44	12,91	135,9	22,5	90,7%	79,6%	78,5%
217,00	1,10	0,16	7,42	159,1%	20,44	12,94	135,4	22,5	90,7%	79,6%	78,5%
218,00	1,11	0,16	7,40	159,7%	20,44	12,96	134,8	22,4	90,7%	79,6%	78,5%
219,00	1,08	0,16	7,40	159,7%	20,44	12,96	134,5	22,4	90,7%	79,6%	78,6%
220,00	1,08	0,16	7,37	160,6%	20,44	12,99	133,7	22,3	90,7%	79,7%	78,6%
221,00	1,08	0,16	7,33	162,0%	20,45	13,03	133,4	22,5	90,7%	79,6%	78,6%
222,00	1,08	0,16	7,32	162,6%	20,45	13,05	132,6	22,5	90,7%	79,7%	78,6%
223,00	1,03	0,16	7,28	163,0%	20,45	13,08	132,3	22,5	90,7%	79,7%	78,6%
224,00	1,03	0,16	7,30	163,1%	20,45	13,06	131,7	22,5	90,6%	79,8%	78,7%
225,00	1,03	0,17	7,32	162,5%	20,45	13,05	131,2	22,5	90,6%	79,8%	78,7%
226,00	1,03	0,17	7,32	162,0%	20,45	13,05	130,6	22,4	90,6%	79,9%	78,8%
227,00	1,03	0,17	7,28	163,7%	20,45	13,08	130,0	22,4	90,6%	79,9%	78,8%
228,00	1,03	0,17	7,25	164,6%	20,45	13,12	129,7	22,4	90,6%	79,9%	78,8%
229,00	1,03	0,17	7,25	164,6%	20,45	13,12	129,4	22,4	90,6%	79,9%	78,8%
230,00	1,03	0,17	7,25	164,6%	20,45	13,12	129,0	22,4	90,6%	79,9%	78,8%
231,00	0,99	0,17	7,22	166,0%	20,45	13,15	128,5	22,4	90,6%	79,9%	78,8%
232,00	0,99	0,17	7,18	167,2%	20,45	13,19	128,3	22,4	90,6%	79,9%	78,8%
233,00	0,99	0,17	7,17	167,8%	20,46	13,20	128,1	22,4	90,6%	79,9%	78,8%
234,00	0,99	0,17	7,13	169,1%	20,46	13,24	127,7	22,5	90,6%	79,9%	78,8%
235,00	0,99	0,17	7,10	170,3%	20,46	13,28	127,2	22,4	90,6%	79,9%	78,9%
236,00	0,94	0,16	7,08	171,2%	20,46	13,30	126,7	22,4	90,6%	80,0%	78,9%
237,00	0,94	0,17	7,03	172,8%	20,46	13,35	126,3	22,4	90,6%	79,9%	78,9%
238,00	0,94	0,17	7,07	171,3%	20,46	13,31	125,9	22,4	90,6%	80,0%	78,9%
239,00	0,94	0,17	7,07	171,4%	20,46	13,31	125,8	22,4	90,6%	80,0%	78,9%
240,00	0,94	0,17	7,05	172,0%	20,46	13,33	125,4	22,4	90,6%	80,0%	78,9%
241,00	0,94	0,17	7,04	172,7%	20,46	13,34	124,9	22,4	90,6%	80,1%	78,9%
242,00	0,90	0,17	7,02	173,4%	20,47	13,36	124,4	22,4	90,6%	80,1%	78,9%
243,00	0,90	0,17	7,00	173,9%	20,47	13,38	123,9	22,4	90,6%	80,1%	79,0%
244,00	0,90	0,17	7,00	173,9%	20,47	13,38	123,7	22,4	90,6%	80,1%	79,0%
245,00	0,90	0,17	6,97	175,3%	20,47	13,42	123,5	22,4	90,6%	80,1%	79,0%
246,00	0,90	0,17	6,97	175,2%	20,47	13,42	123,1	22,4	90,6%	80,2%	79,0%
247,00	0,90	0,17	6,95	175,9%	20,47	13,43	122,7	22,3	90,6%	80,2%	79,0%
248,00	0,90	0,17	6,95	175,8%	20,47	13,43	122,3	22,3	90,6%	80,2%	79,0%
249,00	0,90	0,17	6,92	177,2%	20,47	13,47	122,4	22,3	90,6%	80,2%	79,0%
250,00	0,90	0,17	6,87	178,3%	20,48	13,52	122,0	22,3	90,6%	80,1%	79,0%
251,00	0,88	0,17	6,85	179,9%	20,48	13,54	121,6	22,4	90,6%	80,2%	79,0%
252,00	0,85	0,16	6,84	180,7%	20,48	13,56	121,5	22,3	90,6%	80,1%	79,0%
253,00	0,85	0,16	6,84	180,0%	20,48	13,55	121,2	22,3	90,6%	80,2%	79,0%
254,00	0,85	0,16	6,85	179,9%	20,48	13,54	120,8	22,3	90,6%	80,2%	79,1%
255,00	0,85	0,16	6,84	180,5%	20,48	13,55	120,8	22,3	90,6%	80,2%	79,1%
256,00	0,85	0,16	6,82	181,2%	20,48	13,58	120,6	22,3	90,6%	80,2%	79,1%
257,00	0,85	0,16	6,80	181,9%	20,48	13,59	120,4	22,4	90,6%	80,2%	79,1%
258,00	0,85	0,16	6,80	181,9%	20,48	13,59	120,1	22,3	90,6%	80,2%	79,1%
259,00	0,85	0,16	6,80	181,9%	20,48	13,59	119,7	22,3	90,6%	80,3%	79,1%
260,00	0,81	0,16	6,77	182,3%	20,48	13,63	119,2	22,3	90,6%	80,3%	79,1%
261,00	0,80	0,16	6,72	185,3%	20,49	13,68	119,0	22,3	90,6%	80,3%	79,1%
262,00	0,80	0,16	6,75	183,6%	20,48	13,65	118,9	22,3	90,6%	80,3%	79,1%
263,00	0,80	0,16	6,77	183,2%	20,48	13,63	118,8	22,3	90,6%	80,3%	79,2%
264,00	0,80	0,17	6,75	183,6%	20,48	13,65	118,4	22,3	90,6%	80,3%	79,2%
265,00	0,76	0,16	6,74	184,0%	20,48	13,66	118,3	22,3	90,6%	80,3%	79,2%
266,00	0,76	0,16	6,74	184,4%	20,48	13,66	117,9	22,3	90,6%	80,4%	79,2%
267,00	0,76	0,17	6,72	185,2%	20,49	13,68	117,9	22,3	90,5%	80,4%	79,2%
268,00	0,76	0,16	6,74	184,0%	20,48	13,66	117,8	22,3	90,6%	80,4%	79,2%
269,00	0,76	0,17	6,75	183,6%	20,48	13,65	117,6	22,2	90,5%	80,4%	79,2%
270,00	0,75	0,17	6,80	181,7%	20,48	13,59	117,3	22,3	90,5%	80,5%	79,3%
271,00	0,76	0,17	6,82	181,0%	20,48	13,57	117,0	22,2	90,5%	80,6%	79,4%
272,00	0,76	0,17	6,79	182,3%	20,48	13,61	117,0	22,3	90,5%	80,6%	79,3%
273,00	0,76	0,17	6,81	181,5%	20,48	13,59	116,9	22,3	90,5%	80,5%	79,3%
274,00	0,71	0,18	7,11	169,5%	20,46	13,26	116,5	22,3	90,4%	80,9%	79,6%
275,00	0,71	0,19	7,25	164,0%	20,45	13,10	116,3	22,2	90,3%	81,1%	79,8%
276,00	0,71	0,20	7,62	151,3%	20,42	12,71	116,3	22,2	90,3%	81,3%	80,1%
277,00	0,71	0,20	7,67	149,7%	20,42	12,65	116,5	22,2	90,3%	81,3%	80,1%
278,00	0,67	0,20	7,63	150,7%	20,42	12,69	116,6	22,2	90,3%	81,4%	80,0%
279,00	0,67	0,20	7,68	149,1%	20,42	12,63	117,0	22,2	90,3%	81,3%	80,0%
280,00	0,67	0,21	7,67	149,4%	20,42	12,65	117,4	22,3	90,2%	81,4%	80,0%
281,00	0,67	0,21	7,65	150,0%	20,42	12,67	117,5	22,2	90,2%	81,4%	79,9%
282,00	0,67	0,19	7,82	145,1%	20,41	12,49	117,7	22,2	90,4%	81,3%	80,2%
283,00	0,67	0,11	7,60	154,7%	20,43	12,77	117,1	22,3	90,3%	81,4%	80,9%
284,00	0,62	0,10	7,50	158,3%	20,44	12,89	116,8	22,2	90,4%	81,3%	81,0%
285,00	0,62	0,09	7,44	160,9%	20,44	12,96	116,6	22,2	90,4%	81,5%	81,2%
286,00	0,62	0,09	7,36	162,5%	20,45	13,21	113,6	22,2	90,4%	81,5%	81,1%
287,00	0,62	0,10	7,38	163,6%	20,45	13,04	112,7	22,3	90,4%	81,6%	81,1%
288,00	0,62	0,10	7,32	164,7%	20,45	13,08	112,0	22,3	90,4%	81,6%	81,1%
289,00	0,61	0,10	7,32	164,5%	20,45	13,08	111,4	22,2	90,4%	81,7%	81,1%
290,00	0,59	0,11	7,36	163,2%	20,45	13,04	111,0	22,2	90,3%	81,7%	81,2%
291,00	0,58	0,11	7,39	162,0%	20,45	13,00	110,6	22,2	90,3%	81,8%	81,2%
292,00	0,58	0,11	7,36	163,2%	20,45	13,04	110,3	22,2	90,3%	81,8%	81,2%
293,00	0,58	0,11	7,34	163,7%	20,45	13,05	109,7	22,2	90,3%	81,8%	81,2%
294,00	0,58	0,11	7,34	163,7%	20,45	13,05	109,5	22,2	90,3%	81,8%	81,2%
295,00	0,53	0,10	6,95	180,6%	20,48	13,53	109,4	22,3	90,3%	81,4%	80,9%
296,00	0,53	0,11	7,06	173,0%	20,47	13,35	109,2	22,2	90,2%	81,8%	81,2%
297,00	0,53	0,11	7,06	173,7%	20,47	13,35	109,1	22,2	90,2%	81,8%	81,2%
298,00	0,53	0,12	6,98	177,3%	20,47	13,45	108,8	22,2	90,2%	81,5%	80,9%
299,00	0,53	0,12	6,91	179,4%	20,48	13,50	108,8	22,2	90,1%	81,5%	80,9%
300,00	0,53	0,12	6,83	182,0%	20,48	13,59	108,5	22,2	90,1%	81,4%	80,7%
301,00	0,53	0,12	6,78	184,7%	20,48	13,64	108,3	22,2	90,1%	81,4%	80,7%
302,00	0,53	0,11	6,77	185,0%	20,49	13,66	108,2	22,2	90,2%	81,4%	80,7%
303,00	0,53	0,12	6,70	188,1%	20,49	13,73	108,1	22,2	90,1%	81,3%	80,6%
304,00	0,49	0,12	6,70	188,0%	20,49	13,73	108,0	22,1	90,1%	81,3%	80,6%
305,00	0,49	0,12	6,68	188,5%	20,49	13,74	107,8	22,1	90,1%	81,3%	80,5%
306,00	0,49	0,12	6,68	188,5%	20,49	13,74	108,0	22,2	90,1%	81,3%	80,5%
307,00	0,49	0,13	6,62	191,1%	20,49	13,81	107,8	22,2	90,0%	81,2%	80,4%
308,00	0,49	0,13	6,59	192,2%	20,50	13,84	107,9	22,2	90,0%	81,2%	80,3%
309,00	0,49	0,13	6,62	191,1%	20,49	13,81	107,8	22,2	90,0%	81,2%	80,4%
310,00	0,49	0,13	6,63	190,4%	20,49	13,79	107,7	22,2	90,0%	81,3%	80,5%
311,00	0,44	0,12	6,64	190,6%	20,49	13,80	107,5	22,1	90,0%	81,3%	80,5%
312,00	0,44	0,12	6,63	190,8%	20,49	13,80	107,2	22,2	90,1%	81,3%	80,6%
313,00	0,44	0,12	6,57	193,7%	20,50	13,87	107,0	22,2	90,1%	81,3%	80,5%
314,00	0,44	0,12	6,55	194,3%	20,50	13,89	106,7	22,2	90,1%	81,3%	80,5%
315,00	0,44	0,12	6,54	195,0%	20,50	13,90	106,8	22,2	90,1%	81,3%	80,5%
316,00	0,44	0,12	6,50	196,4%	20,50	13,94	106,7	22,1	90,0%	81,2%	80,4%
317,00	0,40	0,12	6,52	195,6%	20,50	13,92	106,4	22,1	90,0%	81,3%	80,5%
318,00	0,40	0,13	6,50	196,2%	20,50	13,94	106,2	22,2	90,0%	81,2%	80,4%
319,00	0,40	0,13	6,49	196,8%	20,50	13,95	106,2	22,2	90,0%	81,2%	80,3%
320,00	0,40	0,13	6,46	198,2%	20,51	13,98	106,0	22,1	90,0%	81,2%	80,3%

121,00	0,40	0,14	8,40	199,5%	20,31	14,03	155,9	22,1	99,9%	81,2%	80,2%
122,00	0,40	0,14	8,41	200,2%	20,31	14,03	156,1	22,1	99,9%	81,2%	80,2%
123,00	0,40	0,14	8,39	200,9%	20,31	14,05	156,2	22,1	99,9%	81,1%	80,2%
124,00	0,39	0,14	8,39	200,9%	20,31	14,05	156,3	22,1	99,9%	81,1%	80,1%
125,00	0,39	0,14	8,38	202,3%	20,31	14,06	156,1	22,1	99,9%	81,1%	80,1%
126,00	0,39	0,14	8,39	200,9%	20,31	14,05	156,6	22,1	99,9%	81,2%	80,2%
127,00	0,39	0,14	8,40	199,4%	20,31	14,03	156,0	22,1	99,9%	81,2%	80,2%
128,00	0,39	0,14	8,41	200,1%	20,31	14,03	155,9	22,1	99,9%	81,2%	80,2%
129,00	0,39	0,14	8,40	197,9%	20,30	13,98	155,8	22,1	99,9%	81,2%	80,2%
130,00	0,39	0,14	8,44	198,5%	20,31	14,00	155,8	22,1	99,9%	81,2%	80,2%
131,00	0,39	0,14	8,40	198,3%	20,31	14,01	155,7	22,1	99,9%	81,2%	80,2%
132,00	0,39	0,14	8,40	199,1%	20,31	14,01	155,8	22,1	99,9%	81,2%	80,2%
133,00	0,39	0,14	8,41	199,9%	20,31	14,03	155,4	22,0	99,9%	81,2%	80,1%
134,00	0,31	0,14	8,39	200,6%	20,31	14,05	155,5	22,0	99,9%	81,2%	80,2%
135,00	0,30	0,14	8,38	202,2%	20,31	14,08	155,5	22,1	99,9%	81,1%	80,1%
136,00	0,31	0,14	8,34	202,9%	20,31	14,10	155,3	22,0	99,9%	81,1%	80,1%
137,00	0,30	0,14	8,32	203,6%	20,31	14,12	155,1	22,0	99,7%	81,1%	80,1%
138,00	0,30	0,15	8,32	203,6%	20,31	14,12	155,3	22,1	99,7%	81,1%	80,1%
139,00	0,30	0,15	8,36	205,7%	20,32	14,16	155,4	22,1	99,7%	81,0%	80,0%
140,00	0,30	0,16	8,40	197,7%	20,30	13,98	155,5	22,1	99,9%	81,2%	80,1%
141,00	0,28	0,16	8,31	194,6%	20,30	13,91	155,5	22,0	99,9%	81,2%	80,2%
142,00	0,28	0,16	8,31	194,6%	20,30	13,91	155,6	22,0	99,9%	81,2%	80,1%
143,00	0,28	0,16	8,47	195,1%	20,30	13,93	155,7	22,0	99,9%	81,2%	80,1%
144,00	0,28	0,16	8,46	196,5%	20,30	13,97	155,7	22,0	99,9%	81,2%	80,1%
145,00	0,28	0,16	8,46	197,0%	20,30	13,97	155,6	22,0	99,9%	81,2%	80,1%
146,00	0,28	0,16	8,44	197,8%	20,30	13,99	155,8	22,1	99,9%	81,2%	80,1%
147,00	0,28	0,16	8,44	197,8%	20,30	13,99	155,7	22,0	99,9%	81,2%	80,1%
148,00	0,28	0,16	8,44	197,8%	20,30	13,99	155,7	22,0	99,9%	81,2%	80,1%
149,00	0,28	0,16	8,44	197,7%	20,30	13,98	155,6	22,0	99,9%	81,2%	80,1%
150,00	0,22	0,16	8,42	198,4%	20,31	14,00	155,7	22,0	99,9%	81,2%	80,0%
151,00	0,21	0,16	8,42	198,4%	20,31	14,00	155,5	22,0	99,9%	81,2%	80,1%
152,00	0,21	0,16	8,41	199,2%	20,31	14,02	155,7	22,0	99,9%	81,2%	80,0%
153,00	0,21	0,16	8,41	199,2%	20,31	14,02	155,7	22,0	99,9%	81,2%	80,0%
154,00	0,21	0,16	8,38	199,9%	20,31	14,04	155,6	22,0	99,9%	81,2%	80,0%
155,00	0,21	0,16	8,37	200,5%	20,31	14,05	155,6	22,0	99,9%	81,1%	79,9%
156,00	0,21	0,16	8,34	201,1%	20,31	14,09	155,6	22,0	99,9%	81,1%	79,9%
157,00	0,21	0,16	8,32	201,8%	20,31	14,11	155,3	21,9	99,9%	81,1%	79,9%
158,00	0,17	0,16	8,32	201,8%	20,31	14,11	155,4	22,0	99,9%	81,1%	79,9%
159,00	0,17	0,16	8,32	201,1%	20,31	14,11	155,3	22,0	99,9%	81,1%	80,0%
160,00	0,17	0,16	8,31	201,9%	20,31	14,13	155,3	22,0	99,9%	81,1%	79,9%
161,00	0,17	0,16	8,36	201,4%	20,31	14,07	155,2	22,0	99,9%	81,2%	80,0%
162,00	0,17	0,16	8,32	202,9%	20,31	14,11	155,3	22,0	99,9%	81,1%	79,9%
163,00	0,13	0,16	8,36	204,4%	20,31	14,14	155,3	21,9	99,9%	81,1%	79,9%
164,00	0,13	0,16	8,36	204,3%	20,31	14,14	155,3	22,0	99,9%	81,1%	79,8%
165,00	0,12	0,16	8,31	203,5%	20,31	14,12	155,4	22,0	99,9%	81,1%	79,8%
166,00	0,12	0,16	8,36	204,2%	20,31	14,14	155,3	22,0	99,9%	81,1%	79,8%
167,00	0,12	0,17	8,33	203,6%	20,31	14,13	155,3	21,9	99,9%	81,1%	79,9%
168,00	0,12	0,17	8,34	201,3%	20,31	14,08	155,4	21,9	99,4%	81,1%	79,8%
169,00	0,12	0,16	8,46	195,2%	20,30	13,94	155,6	21,9	99,3%	81,2%	79,8%
170,00	0,12	0,16	8,51	193,6%	20,30	13,90	155,9	22,0	99,3%	81,2%	79,8%
171,00	0,09	0,16	8,46	195,0%	20,30	13,93	155,9	21,9	99,3%	81,2%	79,8%
172,00	0,08	0,16	8,46	195,1%	20,30	13,93	156,0	21,9	99,3%	81,2%	79,8%
173,00	0,08	0,16	8,45	197,3%	20,30	13,98	156,2	21,9	99,3%	81,1%	79,8%
174,00	0,08	0,16	8,40	198,9%	20,31	14,02	156,4	21,9	99,3%	81,1%	79,7%
175,00	0,08	0,16	8,40	198,9%	20,31	14,02	156,5	21,9	99,3%	81,1%	79,7%
176,00	0,08	0,16	8,36	200,5%	20,31	14,06	156,6	22,0	99,3%	81,0%	79,7%
177,00	0,08	0,16	8,31	202,0%	20,31	14,09	156,5	21,9	99,3%	81,0%	79,6%
178,00	0,08	0,16	8,31	202,9%	20,31	14,11	156,6	21,9	99,3%	80,9%	79,6%
179,00	0,08	0,17	8,25	205,0%	20,32	14,16	156,5	21,9	99,3%	80,9%	79,5%
180,00	0,04	0,17	8,30	203,6%	20,31	14,13	156,5	22,0	99,4%	80,9%	79,6%
181,00	0,03	0,16	8,34	193,2%	20,30	13,85	156,7	21,9	99,3%	81,2%	79,6%
182,00	0,03	0,16	8,31	189,2%	20,49	13,79	156,8	21,9	99,3%	81,3%	79,6%
183,00	0,03	0,16	8,36	190,0%	20,49	13,82	157,0	21,9	99,3%	81,2%	79,6%
184,00	0,02	0,16	8,36	190,0%	20,49	13,83	157,1	21,9	99,3%	81,2%	79,6%

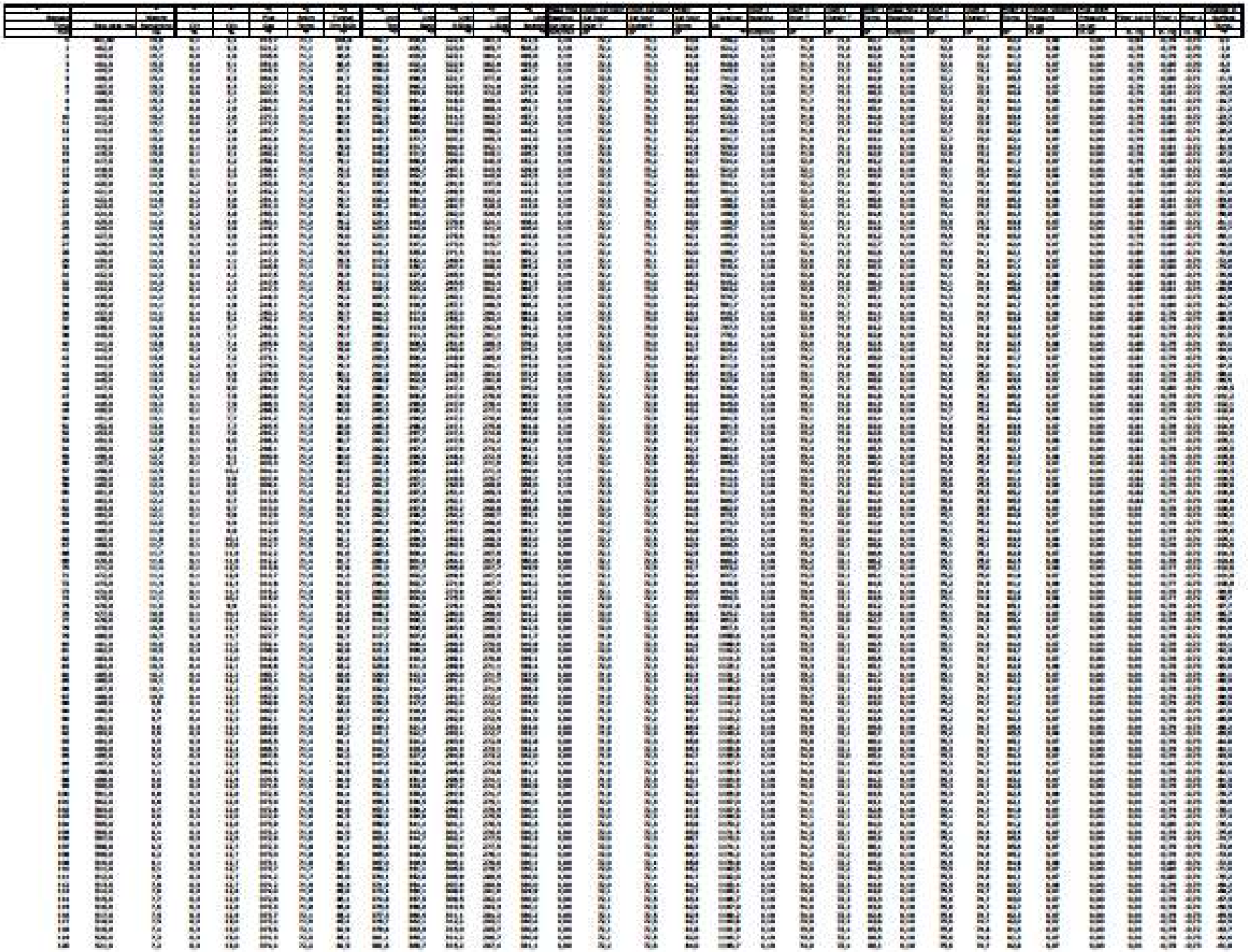

[redacted]

SFBA EPA EMISSION RESULTS

RESULTS

Average emission rate: 1,69 g/hr

Burn Rate : 0,93 Dry kg/hr

Test Duration: **384** min

PRESSURE FACTOR:	DGM 1st hr	0,961	
	DGM 1	0,961	
	DGM 2	0,963	
	DGM 3	0,987	
TEMPERATURE FACTORS	DGM 1st hr	0,991	
	DGM 1	0,990	
	DGM 2	0,987	
	DGM 3	0,993	
VOLUMES SAMPLED	DGM 1st hr	11,599	SCft
	DGM 1	65,591	SCft
	DGM 2	69,521	SCft
	DGM 3	53,623	SCft

TOTAL TUNNEL VOLUME : 132026

SAMPLE RATIOS

Sample Train 1st Hr:	1778,4
Sample Train 1:	2012,9
Sample Train 2:	1899,1

Paticulate concentration

Sample Train 1st Hr	**0,000345**	g/dscf
Sample Train 1	**0,000084**	g/dscf
Sample Train 2	**0,000083**	g/dscf
Room	**0,000002**	g/dscf

TOTAL EMISSIONS

Sample Train 1st Hr	**7,08**	g
Sample Train 1	**10,82**	g
Sample Train 2	**10,77**	g

EMISSION RATES

Sample Train 1st Hr	**7,08**	g/hr
Sample Train 1	**1,69**	g/hr
Sample Train 2	**1,68**	g/hr

	Train 1	Train 2	Train 1st Hr
Cs	8,385E-05	8,3428E-05	0,0003448

BAROMETRIC PRESSURE

Average:	29,54475388	In Hg
Start:	29,52998888	In Hg
End:	29,55951887	In Hg

DGM VALUES

DGM 1st hr	Final:	2634,110	Cuft
	Initial:	2621,900	Cuft
DGM 1	Final:	30413,978	Cuft
	Initial:	30344,615	Cuft
DGM 2	Final:	21543,936	Cuft
	Initial:	21470,372	Cuft
DGM #3	Final:	16674,291	Cuft
	Initial:	16619,490	Cuft

TEMPERATURES

DGM 1st hr	532,770	°R
DGM 1	533,346	°R
DGM 2	535,142	°R

CALIBRATION FACTORS

DGM 1st hr	0,9978
DGM 1	0,9936
DGM 2	0,9946
DGM #3	0,9982

TUNNEL FLOW RATE: 343,8 Dscfm

PARTICULATE CATCH

Total Sample Train 1:	5,50	mg
Total Sample Train 2:	5,80	mg
Total Sample Train 1 1st hour:	4,00	mg

DEVIATION: 0,26%

DATA 2023-10-10 EPA PI 20294 RUN 5 CAT 1 NO FAN
preburn / preload

Time acquisition minutes	Flue temp °F	Room temp °F	Tunnel dry bulb °F	Catalyst up °F	scale lbs	Tunnel Velocity Pressure in. Wc	Right °F	Back °F	bottom °F	Top °F	Left °F
1	88,07	68,49	70,88	94,78	4,97	0,0739	68,54	68,33	80,87	68,86	68,80
2	115,29	68,51	74,38	141,11	4,87	0,0742	68,53	68,38	93,22	68,73	68,56
3	136,26	68,52	77,27	162,76	4,77	0,0732	68,60	68,99	110,28	68,66	68,77
4	159,64	68,53	72,32	180,32	4,67	0,0758	68,70	69,94	124,42	68,96	69,25
5	165,52	68,57	72,96	176,96	4,86	0,0737	68,99	71,28	131,48	69,21	70,20
6	202,13	68,53	73,72	177,09	4,67	0,0730	69,54	72,83	134,22	69,59	71,70
7	267,27	68,57	77,34	204,08	4,37	0,0732	70,78	74,65	144,11	70,19	73,74
8	329,02	68,58	80,64	251,67	4,27	0,0732	72,39	77,28	163,75	71,18	76,36
9	378,45	68,63	83,64	312,36	4,17	0,0722	74,61	79,68	185,54	72,77	79,45
10	434,71	68,71	87,95	391,67	3,97	0,0722	77,06	82,53	196,56	75,18	83,01
11	488,15	68,84	90,79	449,07	3,77	0,0712	80,15	85,29	206,86	78,64	87,19
12	509,16	68,88	94,47	497,50	3,57	0,0708	83,66	88,29	222,38	83,23	91,90
13	525,11	68,96	96,33	523,96	3,47	0,0701	87,72	91,82	238,67	89,07	97,32
14	532,88	69,03	97,38	529,69	3,28	0,0714	91,96	95,22	256,47	95,97	102,43
15	521,09	69,02	96,82	521,40	3,17	0,0708	96,54	99,14	277,00	103,76	110,07
16	506,44	69,13	96,40	518,77	2,97	0,0712	101,59	103,51	296,98	112,13	117,21
17	495,15	69,17	95,67	506,90	2,87	0,0707	106,99	108,34	320,30	120,49	124,73
18	478,72	69,23	94,00	490,22	2,77	0,0691	112,97	113,49	347,65	128,82	132,57
19	473,17	69,21	93,81	486,51	2,67	0,0709	119,35	118,99	377,44	136,34	140,57
20	467,90	69,11	93,05	472,77	2,67	0,0712	126,11	124,79	405,15	143,47	148,88
21	464,53	69,28	92,73	470,49	2,43	0,0696	133,29	130,97	427,52	150,09	156,74
22	459,12	69,29	92,91	479,92	2,37	0,0707	140,76	137,48	446,32	156,19	164,84
23	455,42	69,26	92,64	480,00	2,17	0,0701	148,68	144,17	462,84	162,14	172,89
24	455,15	69,33	92,83	479,65	2,07	0,0713	156,84	151,22	474,09	167,76	180,95
25	453,39	69,40	93,29	481,20	1,97	0,0722	165,33	158,40	485,29	172,34	188,81
26	451,14	69,46	93,13	485,99	1,87	0,0722	174,01	165,83	493,76	177,34	196,51
27	449,67	69,47	92,28	476,11	1,77	0,0704	182,43	173,36	496,48	182,50	204,20
28	438,49	69,48	91,88	471,84	1,67	0,0701	191,22	180,82	497,80	187,48	211,82
29	431,20	69,45	91,04	469,49	1,67	0,0711	199,82	188,29	506,46	192,27	218,93
30	429,99	69,45	95,56	487,69	1,57	0,0701	208,03	195,57	518,31	196,11	225,96
31	426,49	69,55	96,73	484,96	1,47	0,0722	215,70	202,52	530,32	200,12	232,89
32	424,26	69,15	96,88	493,29	1,27	0,0707	223,21	209,47	522,27	204,40	239,24
33	419,57	68,77	89,64	484,38	1,27	0,0714	229,93	216,21	526,69	207,86	245,39
34	426,89	69,01	99,38	491,78	1,17	0,0711	237,48	223,10	527,89	211,43	251,48
35	393,53	69,29	130,81	407,82	23,70	0,0691	244,11	230,51	516,84	214,02	257,24
36	329,27	69,37	119,23	279,55	17,66	0,0686	250,30	238,09	502,26	217,43	262,40
37	318,33	69,39	117,97	322,81	17,68	0,0696	255,21	244,60	487,14	219,82	267,33
38	315,97	69,42	117,30	338,35	17,48	0,0686	258,70	250,09	473,73	222,27	271,50
39	319,19	69,33	93,66	360,62	17,38	0,0707	260,63	254,31	462,04	223,74	274,88
40	318,46	69,29	87,84	358,58	17,28	0,0722	261,50	257,51	450,55	224,61	276,96
41	303,64	69,40	84,91	353,36	17,28	0,0707	260,59	259,70	440,25	225,24	278,64
42	291,13	69,40	83,50	344,77	17,28	0,0721	260,07	261,25	432,12	225,50	280,41
43	278,74	69,41	82,49	337,32	17,20	0,0722	258,90	262,13	425,64	226,04	281,73
44	264,79	69,49	81,15	330,72	17,18	0,0712	257,12	262,58	419,58	226,16	282,56
45	258,65	69,49	80,46	325,24	17,18	0,0707	255,04	262,53	413,18	226,23	283,29
46	250,46	69,44	80,09	317,26	17,18	0,0737	252,86	262,21	408,43	226,20	283,52
47	242,70	69,52	79,77	309,64	17,18	0,0737	249,63	261,53	405,04	225,46	283,35
48	235,97	69,47	79,40	302,74	17,18	0,0722	247,19	260,71	401,90	225,01	282,81
49	230,76	69,50	79,19	297,38	17,08	0,0721	244,06	259,72	398,63	224,60	281,92
50	229,53	69,49	78,92	296,07	17,08	0,0722	241,28	258,43	396,64	223,66	280,76
51	230,24	69,53	78,83	297,93	17,08	0,0722	238,43	257,00	393,02	222,66	279,45
52	230,27	69,50	78,99	295,96	16,98	0,0722	235,12	255,63	389,53	221,92	277,92
53	225,14	69,53	78,86	290,66	16,98	0,0707	232,36	254,08	385,73	221,26	276,33
54	220,18	69,41	78,23	285,63	16,90	0,0734	229,50	252,33	382,07	220,29	274,71
55	216,43	69,45	77,36	281,63	16,88	0,0737	227,06	250,67	378,32	217,89	272,73
56	231,82	69,51	83,37	294,45	16,88	0,0727	224,15	249,14	376,11	216,80	271,01
57	234,14	69,58	84,64	296,51	16,88	0,0732	221,26	247,43	375,36	215,89	269,35
58	242,23	69,43	82,26	298,31	16,78	0,0722	218,80	245,68	381,21	214,34	267,72
59	251,14	69,54	80,48	300,12	16,73	0,0711	216,00	243,97	383,63	212,99	265,98
60	286,81	69,61	82,17	309,34	16,58	0,0730	212,85	242,40	386,71	211,74	264,45
61	323,60	69,41	84,24	330,77	16,48	0,0732	210,62	241,01	389,61	211,20	263,04
62	352,79	69,26	86,13	360,64	16,28	0,0722	208,28	239,70	392,24	210,65	262,06
63	378,10	69,44	87,47	393,34	16,22	0,0707	206,46	238,64	393,96	210,40	261,49
64	408,24	69,55	89,88	426,67	16,08	0,0722	204,44	237,82	396,07	209,81	261,51
65	420,34	69,61	90,49	450,74	15,88	0,0724	203,15	237,09	394,85	210,16	262,05
66	408,41	69,70	89,47	447,80	15,78	0,0722	202,09	236,86	393,44	210,52	263,18
67	389,58	69,74	87,89	440,28	15,78	0,0732	200,93	236,83	392,09	210,85	264,79
68	386,15	69,74	88,21	436,64	15,58	0,0727	200,18	236,97	392,13	212,03	266,74
69	394,57	69,76	88,64	429,97	15,48	0,0712	199,35	237,18	393,65	213,44	268,92
70	396,21	69,89	89,21	442,30	15,38	0,0717	198,56	237,49	395,90	214,33	271,29
71	402,01	69,87	89,63	464,97	15,28	0,0696	198,02	237,96	399,04	216,40	273,82
72	418,65	69,91	91,23	469,39	15,08	0,0712	197,83	238,49	403,04	218,21	276,62
73	458,77	69,90	93,66	504,71	14,96	0,0722	197,29	239,18	407,23	220,08	279,95
74	502,24	69,96	96,96	553,63	14,78	0,0707	196,97	240,01	410,96	221,94	283,34
75	550,68	70,05	101,47	614,38	14,58	0,0707	197,06	241,18	415,05	224,27	287,18
76	579,89	70,29	104,30	661,22	14,28	0,0701	197,39	242,99	419,41	228,27	291,38
77	596,67	70,28	106,44	690,96	14,08	0,0711	198,49	245,50	423,59	232,36	296,08
78	605,45	70,03	107,78	707,88	13,78	0,0686	199,12	248,27	427,82	237,91	301,38
79	606,24	70,13	107,68	708,17	13,58	0,0707	201,66	251,90	431,88	243,97	306,91
80	616,90	70,13	109,29	709,64	13,38	0,0696	204,20	255,53	435,96	250,76	313,05
81	630,42	70,34	110,28	719,58	13,08	0,0701	207,18	259,73	441,58	257,59	319,27
82	637,50	70,41	110,97	729,64	12,88	0,0686	210,62	264,21	447,80	263,76	325,74
83	642,43	70,18	111,10	737,67	12,68	0,0692	213,97	268,65	454,78	271,19	331,94
84	647,90	70,18	112,00	747,79	12,38	0,0696	218,15	274,23	462,02	279,24	338,29
85	655,69	70,38	113,06	757,78	12,18	0,0707	222,65	279,67	467,94	287,45	344,79
86	666,25	70,57	113,66	776,34	11,98	0,0681	226,57	285,59	471,53	295,53	351,62
87	679,10	70,84	115,70	795,92	11,68	0,0706	231,61	291,96	474,28	303,75	358,81
88	687,96	71,14	117,50	806,76	11,46	0,0691	236,98	298,63	476,51	312,47	366,48
89	691,79	71,25	118,02	813,68	11,17	0,0686	241,84	305,58	478,69	320,38	375,26
90	688,70	71,29	117,99	820,13	10,88	0,0686	247,01	313,28	481,58	328,53	384,30
91	694,41	71,29	118,69	816,47	10,68	0,0686	252,62	321,52	485,22	337,59	393,77
92	701,07	71,58	119,35	816,38	10,38	0,0686	258,37	330,09	489,50	346,01	403,43
93	702,97	71,61	119,50	814,65	10,18	0,0691	264,40	338,86	493,74	354,00	413,04
94	701,34	71,71	119,48	811,81	9,87	0,0678	270,59	347,70	497,45	362,41	422,65
95	702,45	71,65	120,49	815,86	9,58	0,0691	276,62	356,76	500,18	370,28	432,17

96	700,00	71,80	119,82	817,70	8,38	0,0691	282,80	366,70	496,67	379,38	441,82
97	698,70	71,81	118,83	815,97	9,17	0,0690	288,48	374,92	497,48	388,01	450,42
98	697,69	71,79	118,34	810,90	8,88	0,0686	294,29	383,65	498,77	395,69	458,66
99	698,47	71,87	118,34	807,82	8,58	0,0691	301,02	392,65	499,58	403,91	466,65
100	699,38	71,84	119,76	807,77	8,47	0,0671	307,82	401,34	502,61	410,00	474,48
101	698,81	71,89	119,07	811,29	8,28	0,0687	313,74	410,09	507,72	416,92	481,74
102	698,73	72,05	118,49	816,54	8,08	0,0696	319,51	418,64	513,43	424,24	488,81
103	700,07	71,91	118,44	820,55	7,87	0,0691	325,19	426,96	520,08	431,82	495,13
104	704,48	71,91	118,38	826,46	7,87	0,0681	330,90	435,29	528,35	437,50	501,27
105	700,25	71,85	117,98	821,69	7,48	0,0691	336,48	443,30	536,29	444,69	507,13
106	697,16	71,74	118,25	812,90	7,21	0,0691	341,74	450,97	542,95	450,80	512,88
107	690,81	71,92	117,28	806,01	7,07	0,0701	347,21	458,66	548,55	457,01	518,17
108	680,36	72,11	115,96	796,45	6,88	0,0693	352,80	466,62	553,13	463,22	523,22
109	677,02	72,20	115,87	795,26	6,88	0,0686	358,47	472,84	557,94	467,74	527,96
110	674,08	71,99	114,96	774,88	6,47	0,0722	363,96	479,53	563,42	473,66	532,56
111	669,01	72,17	114,41	766,04	6,27	0,0705	369,00	485,59	569,21	476,86	536,90
112	661,28	72,41	114,41	757,91	6,18	0,0688	376,14	491,78	575,48	480,81	541,07
113	571,10	72,20	101,70	845,18	6,06	0,0696	382,24	497,44	580,53	485,66	544,66
114	508,11	72,21	97,39	909,66	6,04	0,0727	388,03	502,90	578,23	486,74	547,79
115	467,82	72,08	94,12	897,53	5,98	0,0727	393,11	506,77	572,28	489,23	549,69
116	446,15	72,12	92,33	862,47	5,87	0,0732	397,88	510,18	565,92	491,09	551,47
117	418,31	72,24	90,29	837,73	5,87	0,0748	400,87	512,69	559,96	492,58	552,38
118	400,86	71,84	89,03	833,82	5,87	0,0742	403,10	514,22	554,30	490,86	552,80
119	386,37	72,14	88,83	829,57	5,77	0,0722	404,57	514,90	549,28	495,35	553,00
120	374,28	72,11	87,79	822,74	5,74	0,0718	406,22	514,87	544,84	494,99	552,86
121	363,66	71,99	87,41	813,25	5,67	0,0737	406,39	513,88	540,96	493,86	552,03
122	355,11	71,83	86,90	807,25	5,67	0,0758	406,11	512,80	537,34	492,39	550,82
123	347,47	71,84	87,80	799,59	5,67	0,0732	404,25	511,30	534,04	490,91	548,82
124	340,22	71,96	86,20	794,22	5,67	0,0727	403,35	509,47	531,22	489,33	546,69
125	334,81	72,12	86,21	791,81	5,67	0,0727	402,17	507,57	528,27	488,19	544,43
126	329,24	72,19	85,42	787,94	5,49	0,0763	400,90	505,61	525,79	485,85	541,77
127	324,19	72,00	84,86	784,13	5,48	0,0732	399,22	503,44	523,56	483,85	538,75
128	319,25	72,08	84,82	780,92	5,38	0,0741	397,83	501,14	521,75	480,71	535,61
129	315,12	71,59	84,44	777,28	5,38	0,0727	396,23	498,93	520,18	477,41	532,51
130	311,25	71,79	84,05	773,63	5,38	0,0732	394,84	496,26	518,68	474,70	529,26
131	307,79	71,85	84,22	769,68	5,38	0,0732	393,24	493,92	517,28	472,02	525,90
132	304,93	71,85	83,76	766,23	5,27	0,0742	391,58	491,30	516,15	469,59	522,73
133	301,91	71,87	82,96	763,11	5,27	0,0727	389,88	488,74	514,96	466,57	519,47
134	299,13	71,90	83,20	760,66	5,17	0,0742	388,20	486,13	513,77	463,92	516,28
135	296,30	71,91	83,21	756,69	5,17	0,0732	386,53	483,45	512,64	460,01	513,03
136	293,84	71,76	83,08	753,55	5,17	0,0722	384,83	480,80	511,64	457,94	509,77
137	291,67	71,88	83,12	752,49	5,07	0,0737	383,05	478,25	510,67	455,83	506,53
138	289,60	71,58	83,09	749,99	5,07	0,0728	381,63	475,71	509,62	453,81	503,32
139	287,77	71,88	82,86	747,91	5,07	0,0737	380,03	473,20	508,48	450,96	500,09
140	285,39	71,58	82,20	747,53	4,97	0,0742	379,04	470,80	507,39	449,33	497,05
141	285,23	71,77	82,16	747,78	4,97	0,0727	378,03	468,42	506,33	447,20	493,99
142	283,45	71,75	82,08	749,66	4,98	0,0730	376,86	465,94	505,36	444,60	490,96
143	282,49	71,42	82,22	755,38	4,87	0,0737	375,45	463,60	504,49	442,76	487,99
144	281,29	71,58	81,94	756,63	4,87	0,0732	373,99	461,39	503,75	439,79	485,09
145	279,95	71,91	82,07	754,70	4,79	0,0748	372,91	459,26	503,15	437,49	482,22
146	278,99	71,58	81,81	754,11	4,78	0,0727	371,71	457,17	502,41	435,73	479,44
147	277,84	71,81	80,00	756,71	4,78	0,0763	371,12	455,07	501,59	433,59	476,26
148	276,36	71,71	81,21	757,75	4,78	0,0732	370,12	452,76	500,67	431,33	473,50
149	275,39	71,85	81,87	757,84	4,68	0,0722	369,79	450,74	499,41	429,83	470,84
150	273,90	72,01	81,00	758,18	4,68	0,0727	368,47	448,76	498,36	428,64	468,16
151	274,05	71,59	80,26	796,21	4,57	0,0742	368,18	446,80	497,96	424,25	465,57
152	277,28	72,01	80,26	849,70	4,57	0,0732	367,45	444,95	498,39	422,04	462,85
153	280,25	71,93	80,43	871,08	4,54	0,0727	366,91	442,96	499,10	420,81	460,03
154	282,78	71,87	80,84	881,30	4,47	0,0732	366,01	441,11	500,06	418,51	457,47
155	284,92	71,89	81,16	889,70	4,47	0,0727	363,82	439,47	501,18	416,05	455,04
156	287,24	71,82	80,82	897,31	4,43	0,0734	363,39	437,82	502,26	414,69	452,58
157	288,70	71,70	80,86	899,95	4,27	0,0727	360,13	436,27	503,34	412,74	450,08
158	289,81	71,74	81,27	897,44	4,27	0,0737	358,73	434,70	504,61	410,19	447,82
159	290,66	71,27	81,24	897,53	4,27	0,0742	357,21	433,16	505,69	409,21	445,07
160	291,61	71,48	80,82	894,64	4,27	0,0763	355,40	431,73	506,91	407,41	442,89
161	292,05	71,71	79,70	891,15	4,27	0,0737	353,48	430,33	508,25	404,67	440,18
162	292,36	71,58	80,74	887,56	4,27	0,0732	351,88	428,79	509,43	402,13	437,73
163	292,80	71,55	79,79	885,02	4,17	0,0742	350,11	427,29	510,42	400,20	435,34
164	291,90	71,62	82,03	880,82	4,17	0,0732	349,21	426,05	511,22	399,59	433,44
165	291,63	71,84	81,17	879,55	4,17	0,0763	346,76	424,76	511,82	396,70	431,55
166	292,86	71,80	81,64	876,10	4,08	0,0748	345,19	423,57	512,43	395,53	429,64
167	293,87	72,02	81,73	878,52	4,08	0,0742	343,85	422,56	513,14	393,86	427,80
168	293,22	71,81	81,14	880,97	4,08	0,0732	342,11	421,52	514,04	391,10	426,03
169	293,66	71,79	80,45	881,89	3,97	0,0738	340,57	420,40	515,03	389,70	423,79
170	293,96	71,69	81,14	882,15	3,97	0,0742	339,28	419,36	516,11	387,97	422,02
171	294,63	71,70	81,48	881,61	3,97	0,0742	337,78	418,47	517,18	387,06	420,20
172	294,06	71,58	81,76	882,03	3,97	0,0763	336,87	417,41	518,03	385,45	418,24
173	294,82	71,53	80,90	879,96	3,79	0,0742	335,88	416,73	518,79	385,12	416,54
174	294,69	71,87	81,15	877,04	3,77	0,0737	334,43	415,92	519,58	382,96	414,80
175	294,15	71,30	82,80	874,71	3,77	0,0727	333,84	415,18	520,14	381,60	413,29
176	294,27	71,58	81,29	871,90	3,77	0,0748	332,73	414,47	520,77	380,16	411,59
177	293,06	71,21	80,71	867,63	3,67	0,0742	331,07	413,87	521,45	379,22	410,03
178	292,63	71,42	80,49	863,45	3,67	0,0733	330,96	413,36	522,02	377,74	408,52
179	292,22	71,40	80,28	858,64	3,67	0,0758	330,36	412,77	522,59	377,64	406,91
180	291,20	71,28	82,24	854,16	3,57	0,0763	329,88	412,01	523,03	376,80	405,46
181	290,05	71,42	81,50	849,47	3,57	0,0732	329,10	411,61	523,61	375,56	404,03
182	289,56	71,50	81,26	844,36	3,53	0,0758	328,52	411,16	523,99	374,77	402,77
183	288,46	71,49	80,91	840,54	3,47	0,0742	328,12	410,62	524,22	373,81	401,50
184	287,88	71,52	80,09	838,68	3,47	0,0763	326,93	410,20	524,40	371,64	399,99
185	287,34	71,20	79,85	837,74	3,47	0,0737	326,90	409,82	524,69	370,42	398,19
186	286,57	71,28	81,07	835,08	3,44	0,0742	326,03	409,22	525,01	370,01	397,06
187	286,02	71,07	80,93	830,16	3,38	0,0758	325,15	409,10	525,18	369,03	396,00
188	284,70	70,98	82,09	825,29	3,27	0,0741	324,75	408,51	525,20	368,56	394,85
189	284,34	70,85	81,89	822,45	3,38	0,0742	324,82	408,24	524,69	367,44	393,71
190	283,35	70,85	81,26	822,24	3,27	0,0742	323,88	407,98	523,62	366,67	392,82
191	282,82	71,13	81,53	826,14	3,27	0,0727	323,40	407,33	522,38	366,40	391,80
192	282,96	70,94	80,96	828,07	3,27	0,0737	322,78	406,95	521,16	364,76	390,84
193	313,86	71,08	100,88	829,45	3,28	0,0722	322,46	406,81	520,18	363,04	389,44

194	304,23	71,65	62,55	641,40	3,17	0,0732	322,34	408,31	516,07	363,05	366,40

POLYTESTS
TESTING THROUGH YOUR REALITY

Date: 2023-10-18 Manufacturer: Hearthstone Model: 8024

Project #: PT 20294 Run: 5 Tech: MM Reviewer: DP

- Kindling 500LBs Start Fire
- After 2min close Door
- No Fan test
- By pas open
- At 14LBS insert Pr load
- After 10min close Door
- At 61LBS close by pass and air inlet minimum setting
- At 33LBS open Door Rack coal Bed close Door
- After 2min open Door, open by pass, open air inlet insert load, close Door and close By pass
- After 5min close air inlet minimum setting

TEST LOAD CONFIGURATION

POLYTESTS

PRE / POST CHECKS

Date: 2023-10-16 Manufacturer: [illegible] Model: 8024

Project #: PI 20294 Run: 5 Tech: MM Reviewer: DP

	Equipment #	Time	12%	22%
Moisture Meter Calibration Check:	EM-334	7:00	ok	ok

	Pre-Test	Post-Test
Facility Conditions:		
Air Velocity from less than 2 feet	0 (max50 Fpm)	0 (max50 Fpm)
Smoke Capture Check (tunnel velocity)	ok	NA
Picture	4 sides ok	ok
Wood Heater Conditions:		
Date Wood Heater Stack Cleaned	2023-10-02	
Date Dilution Tunnel Cleaned	2023-10-02	
Induced Draft Check (max 0.005 H2O)	ok	
Traverse before ignition	ok	
Temperature System:		
Ambient (65°-90°F)		ok °F
Proportional Checks:		
Thermocouple check	ok	
Pitot Clean	ok	
Pitot verification	ok	
Pictures for report	Side	ok
	Coal bed	ok
	Load	ok
	Load in stove	ok
	Fuel adjustment	ok
Load Length 5/6 of firebox Length +- 1inch		ok

POLYTESTS
TESTING THROUGH YOUR REALITY

Date: 2023-10-10 Manufacturer: Hearthstone Model: 8024

Project #: PI 2-294 Run: 5 Tech: M.M Reviewer: DO

Leakage Checks Tunnel Samplers

	System 1st hour		System 1		System 2		Ambient	
Unplugged Flow Rate = .25cfm	Pre-Test ASTM (-15) CSA B415 (-5)	Post-Test (Max test)	Pre-Test ASTM (-15) CSA B415 (-5)	Post-Test (Max test)	Pre-Test ASTM (-15) CSA B415 (-5)	Post-Test (Max test)	Pre-Test ASTM (-15) CSA B415 (-5)	Post-Test (Max test)
Vacuum (inches Hg.)	-10	-10	-12	-10	-18	-10	-18	-10
Final 1minute DGM (Liter)	2634.85	2634.24	859262.41	861228.34	607932.43	610053.33	430610.82	432166.33
Initial 1minute DGM (Liter)	2634.85 ~~2634~~	2634.24	859262.41	861228.30	607932.43	610053.35	430610.82	432166.33
Change (Liter)	Ø	Ø	Ø	0.04	Ø	0.02	Ø	Ø
Allowable leakage .04 x Sample rate or 0.28Lpm CSA B415 (0.56)								
Check OK	ok	ok	ok	ok	ok	ok	ok	ok

POLYTESTS

Date: 2023-10-10 Manufacturer: Hearthstone Model: 8024

Project #: PS 20294 Run: 5 Tech: M.M Reviewer: AP

Leakage Checks Flue Gas Sampler

Plugged Probe	Pre-Test	Post Test
Vacuum (inches Hg.)	-5	-5
Rotameter Reading (mml/min.)	0	0
Flow Rate (lpm)	1.5	1.5
Allowable (.02 x Sample Rate)	30	30
Check OK	ok	ok

Leakage Checks Pitot

Plugged Probe	Pre-Test 3 H2o static	Pre-Test 0.4-0.5 H2o velocity	Post Test 3 H2o Static	Post Test 0.4-0.5 H2o velocity
Vacuum (inches Hg.)	3	.4	3	.4
Check OK (no change after 15 sec.)	ok	ok	ok	ok

POLYTESTS
INSPIRE THROUGH YOUR REALITY

Date: 2023-10-10 Manufacturer: Heath stone Model: 8024

Project #: PI 20294 Run: 5 Tech: M.M Reviewer: [signature]

Scale Type	Audit		Measured Weight
	Equipment #	Weight	
Platform	EM-090	4.4 lbs, Class F	4.4 lbs
Platform	EM-205	10.00 Kg, Class F	10.00 Kg
Wood	EM-090	4.40 lbs, Class F	4.40 lbs
Analytical	EM-335	100 mg, Class S	100 mg
Analytical	EM-129	200 g, Class S	200 g

LIMITS OF WEIGHT RANGES

ANALYTICAL SCALE: ..... 50%-150% of dry filter weight, ± 0.1 mg
PLATFORM SCALE ..... 20%-80% of ideal test load weight, ± 0.1 lbs or 1%
WOOD SCALE ..... 20%-80% of ideal test load weight, ± 0.01 lbs or 1%

POLYTESTS

CONTINUOUS ANALYZERS

Date: 2023-10-10 Manufacturer: Heath stone Model: 8024

Project #: pE 20294 Run: 5 Tech: M M Reviewer: DP

FOR TUNNELS < 12 in

Barometric pressure (P_{ba}) 1000 (KPa.) Static pressure (P_g) 0,18 (inches w.c.)
Inside diameter: Port A _____ Port B _____
Tunnel cross sectional area: .1963Ft²
Pitot tube type: Standard

Traverse Point	Position (inches)			Velocity Head Δ_p (inches H_2O)	Tunnel Temperature (°F)
Tunnel diameter	6 po	7 po	8 po		
A- Centroid	3.00	3.50	4	0,074	68,27
B - Centroid	3.00	3.50	4	0,074	68,29
A-1	0.40	0.50	0.50	0060	68,27
A-2	1.50	1.75	2	0072	68,25
A-3	4.50	5.25	6	0070	6825
A-4	5.60	6.5	7.5	0060	68,27
B-1	0.40	0.50	0.50	0059	68,29
B-2	1.50	1.75	2	0071	6832
B-3	4.50	5.25	6	0066	68,32
B-4	5.60	6.5	7.5	0060	68,20
				AVERAGE	

POLYTESTS

CONTINUOUS ANALYZERS

Date:_____ Manufacturer:_____ Model:_____

Project #:_____ Run:_____ Tech:_____ Reviewer:_____

FOR TUNNELS 12 in

Barometric pressure (P_{bar}) _____ (KPa.) Static pressure (P_g) _____(inches w.c.)
Pitot tube type: Standard

Traverse Point	Position (inches)	Velocity Head Δ_p (inches H_2O)	Tunnel Temperature (°F)
A Center	6	0074	6827
B Center	6		
A-1	0.53	0060	6827
A-2	1.75	00	
A-3	3.55		
A-4	8.45		
A-5	10.25		
A-6	11.47	NA	
B-1	0.53		
B-2	1.75		
B-3	3.55		
B-4	8.45		
B-5	10.25		
B-6	11.47		

POLYTESTS

CONTINUOUS ANALYZERS

Date: 2023-10-10 Manufacturer: Hearthstone Model: 8024

Project #: PI 20294 Run: 5 Tech: M.M Reviewer: [illegible]

Pre-Test (Adjust and Record)

	ZERO		SPAN		CAL. (Record Only)	
CO	0	0	3,030	3,000	1,022	1,000
Tolerance CO	0	+/- 0.02	0,030	+/- 0.15	0,022	+/- 0.05
CO_2	0	0	18,04	18,00	9,86	19,00
Tolerance CO2	0	+/- 0.02	0,04	+/- 0.5	0,14	+/- 0.5
O_2 informative CSA B415 calculated value	na	na	na	na	na	na
	Actual	Should Be	Actual	Should Be	Actual	Should Be

Post Test (Record Only)

	Zero	Span	Cal.	Zero Drift	Limit	Span Drift	Limit	Cal. Drift	Limit	OK?	Not OK*
CO	0	3,027	1,026	0	0.02	0,003	0.15	0,004	0.05	✓	
CO_2	0	18,01	9,88	0	0.02	0,03	0.5	0,02	0.5	✓	

POLYTESTS

TEST DATA LOG

Date: 2023-10-10 Manufacturer: Hearthstone Model: 8024

Project #: PT 20294 Run: 5 Tech: MM Reviewer: DP

RAW DRY GAS METER READINGS

		System 1st hour	System 1	System 2	Blank
Test	Final (Liter)	26 34 11	861 22 794	610 056 31	472 163 34
	Initial (Liter)	26 21 90	859 263 50 ~~589 263 60~~ MM	607 973 21	470 011 55

AMBIENT CONDITIONS

	Before	After
Barometer (kPa):	1000	1001
Dry Bulb (F):	706	731
Humidity (%):	451	46 f

POLYTESTS

FUEL DATA

Date: 2023. 10-10 Manufacturer: Hearthstone Model: 8024

Project #: PT 20294 Run: 5 Tech: M.M Reviewer: DP

FUEL DESCRIPTION:

Type of wood:

PRE-TEST LOAD

Piece Size	Weight	Meter Moisture Content (% dry) *				
1½ x 3½ x 175 in.	2 148 lbs.	192	192	201	200	201
1½ x 3½ x 175 in.	2 124 lbs.	197	194	198	196	197
1½ x 3½ x 175 in.	1 972 lbs.	200	201	203	202	201
1½ x 3½ x 175 in.	2 062 lbs.	206	203	204	204	203
1½ x 3½ x 12 in.	1 468 lbs.	209	210	211	213	214
1½ x 3½ x 12 in.	1 406 lbs.	206	207	207	207	206
1½ x 3½ x 12 in.	1 42 lbs.	199	193	192	194	194
1½ x 3½ x 12 in.	1 286 lbs.	210	211	218	220	219
1½ x 3½ x 12 in.	1 454 lbs.	210	210	218	217	217
1½ x 3½ x 12 in.	130 lbs.	~~220~~ 220 min	221	223	223	223
x x in.	lbs.					
x x in.	lbs.					
x x in.	lbs.					
x x in.	lbs.					
x x in.	lbs.					
x x in.	lbs.					
x x in.	lbs.					
x x in.	lbs.					
x x in.	lbs.					
x x in.	lbs.					
x x in.	lbs.					
x x in.	lbs.					
x x in.	lbs.					

TEST LOAD WEIGHT: 16 638 lbs

POLYTESTS
TESTING THROUGH TRUE QUALITY

FUEL DATA

Date: 2023-10-16 Manufacturer: Hearthstone Model: 8024

Project #: PI 20294 Run: 5 Tech: MM Reviewer: DD

FUEL DESCRIPTION:

Type of wood:

TEST LOAD

Piece Size				Weight		Meter Moisture Content (% dry)*				
1 1/2	x 3 1/2	x 1.75	in.	1900	lbs.	201	206	203	204	203
1 1/2	x 3 1/2	x 1.75	in.	1758	lbs.	223	224	228	224	223
1 1/2	x 3 1/2	x 1.75	in.	1750	lbs.	218	213	212	210	214
3 1/2	x 3 1/2	x 1.75	in.	4310	lbs.	196	198	193	199	193
3 1/2	x 3 1/2	x 1.75	in.	4488	lbs.	191	190	192	192	191
	x	x	in.		lbs.					
1 1/2	x 3/4	x 5	in.	0.114	lbs.			191		
1 1/2	x 3/4	x 5	in.	0.088	lbs.			193		
1 1/2	x 3/4	x 5	in.	0.094	lbs.			194		
1 1/2	x 3/4	x 5	in.	0.088	lbs.			199		
1 1/2	x 3/4	x 5	in.	0.078	lbs.			201		
1 1/2	x 3/4	x 5	in.	~~0.108~~ 0.108	lbs.			206		
1 1/2	x 3/4	x 5	in.	0.100	lbs.			203		
1 1/2	x 3/4	x 5	in.	0.100	lbs.			196		
1 1/2	x 3/4	x 5	in.	0.122	lbs.			198		
1 1/2	x 3/4	x 5	in.	0.124	lbs.			199		
1 1/2	x 3/4	x 5	in.	0.080	lbs.			194		
1 1/2	x 3/4	x 5	in.	0.120	lbs.			199		
1 1/2	x 3/4	x 5	in.	0.116	lbs.			191		
1 1/2	x 3/4	x 5	in.	0.108	lbs.			193		
1 1/2	x 3/4	x 5	in.	0.100	lbs.			194		
1 1/2	x 3/4	x 5	in.	0.088	lbs.			200		
	x	x	in.		lbs.					
	x	x	in.		lbs.					
	x	x	in.		lbs.					
	x	x	in.		lbs.					
	x	x	in.		lbs.					

TEST LOAD WEIGHT: 15.83 lbs Min 20%: 3.16 Max 25%: 3.96

POLYTESTS

DILUTION TUNNEL PARTICULATE SAMPLER DATA

Date: 2023-10-05 Manufacturer: Hearthstone Model: 8024

Project #: PI 20294 Run: 5 Tech: M. M Reviewer: DP

Pre-test Weight Record		TEST FILTERS					
		SYSTEM 1st hour			SYSTEM 1		
		Probe & Housing Number	Front & Back Filter Number	gaskets	Probe & Housing Number	Front & Back Filter Number	gaskets
Date	Time	004	29-30	32	007	31-32	44
2023-10-05	20:00	61 3964	0 2449	34 3968	61 4730	0 2440	33 6616
2023-10-10	10:00	61 3965	0 2450	34 3968	61 4731	0 2439	33 6617

Post-test Weight Record		TEST FILTERS					
		SYSTEM 1st hour			SYSTEM 1		
		Probe & Housing Number	Front & Back Filter Number	gaskets	Probe & Housing Number	Front & Back Filter Number	gaskets
Date	Time	004	29-30	32	007	31-32	44
2023-10-10	22:00	61 3970	0 2486	34 3996	61 4739	0 2492	33 6648
2023-10-16	8:00	61 3966	0 2483	34 3974	61 4732	0 2490	33 6620
2023-10-17	8:00	61 3966	0 2483	34 3974	61 4732	0 2490	33 6620

POLYTESTS
TESTING THROUGH YOUR REALITY

DILUTION TUNNEL PARTICULATE SAMPLER DATA

Date: 2023-10-05 Manufacturer: Hearthstone Model: 8024

Project #: PI 20294 Run: 5 Tech: M.R Reviewer: [illegible]

Pre-test Weight Record		TEST FILTERS			
		SYSTEM 2			
Date	Time	Probe & Housing Number	Front & Back Filter Number	gaskets	Blank Filter
		33	101-102	45	33
2023-10-05	20:00	109 3633	0 2426	34 2639	0 1216
2023-10-10	10:00	109 3634	0 2425	34 2638	0 1217

Post-test Weight Record		TEST FILTERS				
		SYSTEM 2				
Date	Time	Probe & Housing Number	Front & Back Filter Number	gaskets	Blank Filter	End test time and date
		33	101-102	45	33	2023-10-10
2023-10-10	22:00	109 3641	0 2472	34 2669	0 1219	21:15
2023-10-16	8:00	109 3635	0 2472	34 2648	0 1218	
2023-10-17	8:00	109 3635	0 2472	34 2648	0 1218	

Paramètres

Tous les facteurs de corrections et autres paramètres qui peuvent être modifiés par l'utilisateur du fichier sont regroupés ici.

Code verrouillage:	HEA

Description du test

Test standard	EPA
Run #	6
Date	18-10-2023
Technicien	M.M
Project #	PI 20294

Description de l'unité

Manufacturer	HEARTHSTONE	
Modèle	8024	
Combustion system	Cat	
Appliance type	WOODSTOVE	
Firebox volume	2,17	cu ft.
Appliance weight empty	n.a	lbs
Appliance weight full	n.a	lbs

Paramètres du test

Logging time	1	min
Manufacturer's rated heat output	n.a	BTU/h Donnée fournie par le manfacturier
Targeted category	4	
Targeted output	n.a	BTU/h
Cp steel	n.a	BTU/lb-°F

Échantillonnage

Blank sampling rate	0,20	cuft/min
Internal probe diameter	0,18	in.
Calibration Factor (DGM #1):	0,994	
Equipment number (DGM #1):	EM 178	Dimensionless
Calibration Factor (DGM #2):	0,995	
Equipment number (DGM #2):	EM 318	Dimensionless
Calibration Factor (DGM #3):	0,998	
Equipment number (DGM #3):	EM 179	Dimensionless
Calibration Factor (DGM 1st Hr):	0,998	
Equipment number (DGM 1st Hr):	EM 130	Dimensionless

Tunnel

Targeted tunnel flow rate	300	scfm
Tunnel diameter	8	in.
Molecular weight	29	29 as per ASTM E2515
Pitot tube type	Standard	
Pitot tube coefficient	0,99	Dimensionless

Project nu.	PI 20294
Date	18-10-2023
Technicien	M.M

Fuel data

Fuel type	Dimension	
Fuel specie	D. Fir	
HHV	19810,0	kJ/kg
%C	48,7	
%H	6,9	
%O	43,9	
%Ash	0,5	
HHV	8519,2	Btu/lb
LHV	7451,0	Btu/lb

Default Fuel Values

	D. Fir	Oak/Maple
HHV	19 810	19 887
%C	48,73	50
%H	6,87	6,6
%O	43,9	42,9
%Ash	0,5	0,5
HHV (Btu/lb)	8519	8552
LHV (Btu/lb)	7451	7480

	Start	End
Barometer (kPa):	101,4	101,3
Barometer (in.Hg):	29,943409	29,91387874
Dry Bulb (F):	72,6	76,1
Humidity (%):	41,7	40,3
Air velocity (ft/min)	0	0

DGM #1st hour	Final:	2646,500	cuft	Final:	2646,500	cuft
	Initial:	2634,500	cuft	Initial:	2634,500	cuft
DGM #1	Final:	30442,063	cuft	Final:	862023,220	Liter
	Initial:	30414,070	cuft	Initial:	861230,540	Liter
DGM #2	Final:	21573,893	cuft	Final:	610904,600	Liter
	Initial:	21544,048	cuft	Initial:	610059,480	Liter
DGM room	Final:	16696,474	cuft	Final:	472791,480	Liter
	Initial:	16674,336	cuft	Initial:	472164,600	Liter

Numéro de la ligne dans "Raw data" à partir duquel les données du VRAI test commencent: 202

Autres données à rentrer: dans preload data, load data, traverse et filter set weight

Project nu.	PI 20294
Date	18-10-2023
Technicien	M.M

Preload data sheet

Test Load Weight:

Lower	Ideal	Upper
13,67	15,19	16,71

Load Volume: 0,4314 cu. ft

Loading Density: 7,830 lbs./ft3

Number of Spaces:

Spacer weight (lbs):

Load Density (wet): 39,386 lbs./ft3

Dry Wood Density: 32,620481

Piece Size (in): Thick	Wide	x Length	Weight lbs	Meter Moisture Content Dry Uncorrected %					Ave. MC x Weight	Volume Cubic Inches
1,5	3,5	17,5	1,982	20,9	20,6	20,8	20,7	20,7	41,10668	91,88
1,5	3,5	17,5	1,858	21	21,1	20,9	20,9	20,9	38,94368	91,88
1,5	3,5	17,5	2,012	19,9	20	20	20	19,9	40,15952	91,88
1,5	3,5	17,5	2,058	21,1	21	21	21	21,1	43,30032	91,88
1,5	3,5	12	1,454	21,1	21	21,3	21,2	21,2	30,76664	63,00
1,5	3,5	12	1,548	21,9	22	22	21,8	21,7	33,87024	63,00
1,5	3,5	12	1,594	22	22,1	22	22,1	22,2	35,19552	63,00
1,5	3,5	12	1,426	20,1	20	20,1	20,1	20,2	28,6626	63,00
1,5	3,5	12	1,476	19,8	19,7	19,8	19,7	19,7	29,13624	63,00
1,5	3,5	12	1,584	19,7	19,9	19,8	19,6	19,7	31,26816	63,00
										0,00
										0,00
										0

FUEL LOAD DATA SHEET, CSA B415

Test Load Weight:

Lower	Ideal	Upper
13,7	15,2	16,7

* For boilers, a loading density factor of 10 lb/ft3 is applied

Load Volume: 0,41 cu. ft

Loading Density: 7,3 lbs./ft3

Number of Spaces: 16

Spacer weight: lbs

Load Density (wet): 34,7 lbs./ft3

Dry Wood Density: 28,6 lbs./ft3

Piece Size (in): Thick	Wide	Length	Weight lbs	Meter Moisture Content Dry Uncorrected %					Ave. MC x Weight	Volume Cubic Inches	Ave. MC %	
1,5	3,5	17,5	1,77	20,90	21,00	20,90	20,90	20,80	37,0348	91,88	20,9	
1,5	3,5	17,5	1,73	21,20	21,10	21,70	21,80	21,40	37,04832	91,88	21,4	
1,5	3,5	17,5	1,79	21,00	21,10	21,10	21,10	21,20	37,7268	91,88	21,1	
3,5	3,5	17,5	4,45	21,80	21,70	21,60	21,50	21,50	96,29548	214,38	21,6	
3,5	3,5	17,5	4,39	21,10	21,40	21,30	21,30	21,00	93,11336	214,38	21,2	Load
										0,00		
										0,00		
										0,00		
1,5	0,75	5	0,10			19,60			2,0384	5,63	19,6	
1,5	0,75	5	0,11			19,40			2,0952	5,63	19,4	
1,5	0,75	5	0,10			19,80			1,9404	5,63	19,8	
1,5	0,75	5	0,09			19,90			1,7512	5,63	19,9	
1,5	0,75	5	0,09			19,80			1,7028	5,63	19,8	
1,5	0,75	5	0,09			19,30			1,7756	5,63	19,3	
1,5	0,75	5	0,10			20,00			2,08	5,63	20,0	
1,5	0,75	5	0,11			20,00			2,28	5,63	20,0	
1,5	0,75	5	0,11			20,10			2,211	5,63	20,1	
1,5	0,75	5	0,10			20,30			1,9894	5,63	20,3	
1,5	0,75	5	0,11			20,40			2,244	5,63	20,4	
1,5	0,75	5	0,14			20,30			2,7608	5,63	20,3	
1,5	0,75	5	0,14			20,30			2,7608	5,63	20,3	
1,5	0,75	5	0,10			20,60			2,06	5,63	20,6	
1,5	0,75	5	0,11			20,40			2,2032	5,63	20,4	spacers
1,5	0,75	5	0,10			20,60			2,06	5,63	20,6	
										0,00		
										0,00		
										0,00

Tunnel Traverse Worksheet (for velocity calculations)

Static Pressure: 0,18 in. H20
Barometer: 29,900 in. Hg

Pour un tunnel de 12" et plus, prendre 6 lectures

	TUNNEL VELOCITY	TUNNEL TEMP	SQUARE ROOT
	In. wc	°F	
A center			0,0000
B center			0,0000
A1			0,0000
A2			0,0000
A3			0,0000
A4			0,0000
A5			0,0000
A6			0,0000
B1			0,0000
B2			0,0000
B3			0,0000
B4			0,0000
B5			0,0000
B6			0,0000
AVERAGE	#DIV/0!	#DIV/0!	0,0000

PITOT CONSTANT=
0,956

Pour un tunnel moins de 12", prendre 4 lectures

	TUNNEL VELOCITY	TUNNEL TEMP	SQUARE ROOT
	In. wc	°F	
A center	0,077	69,95	0,2775
B center	0,076	69,98	0,2757
A1	0,063	69,95	0,2510
A2	0,077	69,91	0,2775
A3	0,074	69,91	0,2720
A4	0,063	69,96	0,2510
B1	0,062	70,0	0,2490
B2	0,073	70,0	0,2702
B3	0,072	70,0	0,2683
B4	0,063	70,0	0,2510
AVERAGE	0,0700	69,9650	0,2643

Project nu.	PI 20294
Date	18-10-2023
Technicien	M.M

Filter set weight

	System 1 (g) 1st hour			System 1 (g)			System 2 (g)			Ambient blank (g)	Date	Heure	Test end date & time
	probe	front/ Back	gasket	probe	front/ Back	gasket	probe	front/ Back	gasket	Filter			
Number	35	120-121	6	38	122-123	11	41	124-125	37	126			
Before (1)													
Before (2)													
Before (3)													
Before (4)													
Before (5)	109,2821	0,2440	34,7515	110,4346	0,2440	34,4145	110,3652	0,2436	33,4729	0,1214	2023-10-17	17:00	
Before (6)	109,2820	0,2440	34,7516	110,4347	0,2441	34,4146	110,3653	0,2437	33,4728	0,1215	2023-10-18	09:00	
After (1)	109,2826	0,2459	34,7548	110,4348	0,2459	34,4169	110,3656	0,2446	33,4773	0,1216	2023-10-18	14:00	
After (2)	109,2821	0,2456	34,7530	110,4348	0,2458	34,4155	110,3654	0,2445	33,4748	0,1216	2023-10-23	08:00	
After (3)	109,2821	0,2456	34,7530	110,4348	0,2458	34,4155	110,3654	0,2445	33,4748	0,1216	2023-10-24	08:00	
After (4)													2023-10-18 13:15
After (5)													
After (6)	109,2821	0,2456	34,7530	110,4348	0,2458	34,4155	110,3654	0,2445	33,4748	0,1216	2023-10-24	08:00	
Difference	0,0001	0,0016	0,0014	0,0001	0,0017	0,0009	0,0001	0,0008	0,0020	0,0001			
Total (mg)		3,1			2,7			2,86		0,1			
Total ajusté (mg)		**3,00**			**2,60**			**2,76**					

Project nu.	PI 20294
Date	18-10-2023
Technicien	M.M

Manufacturer: [illegible]
Model: [illegible]

Run: 6
Project #: P-20264
Test Duration: 180 min

Note: In the "Input data", "Calc. % O_2", "Fuel Properties" and "Mass Balance" columns, [A], [B], [C], [D], [E], [F], [G], [H], [I] and [J] refer to their respective variables in Clauses 10.7.3 to 10.7.5.

	ASH	GAS
HR	[illegible]	[illegible]
Carbon MF	83.19%	83.19%
HT MF	14.19%	83.00%
Oxygen	11.500	83%
Sulfur Dioxide	0.21	ppm
Carbon CO	483	ppm
Nitrogen	84.000	ppm
NO as NO2	12.00	
Temperature	0.21	0.21

Ultimate CO_2
CO_{2max} 15.00
A_2
1.900

Overall Heating Efficiency:	70.00%	
Combustion Efficiency:	83.00%	
Heat Transfer Efficiency:	70.00%	

Air-Fuel Ratio (A/F)

Dry Molecular Weight (M_d)	30.24	
Gm Water Released Gas (M_w	130.63	lb/lbmole
A/F Ratio (mass)	7.00	lb/lb

Heat Output	32,371 Btu/h	33,500 kJ/h
Heat Output	32,254 Btu/h	34,564 kJ/h
Burn Duration	3.83 h	
Burn Rates	4.00 lb/h	3,200 kg/h
Stack Temp	444.1 Deg. F	229.5 Deg. C

Elapsed Time	Weight	% CO_2	% O_2	Excess Air %	Calc. % CO	Calc. % CnHm	Flue Gas Temp (F)	Flue Gas Temp (C)	Combustion Efficiency	Heat Transfer Efficiency	Overall Efficiency	Fuel Rate	Mass Emissions lb/h	Mass Emissions g/s	Mass Emissions lb/MMBtu	Mass Emissions g/GJ
[illegible]																

[redacted]
[redacted]

SFBA EPA EMISSION RESULTS

Test Duration: **158** min

PRESSURE FACTOR:	DGM 1st hr	0,971	
	DGM 1	0,975	
	DGM 2	0,974	
	DGM 3	1,000	
TEMPERATURE FACTORS	DGM 1st hr	0,980	
	DGM 1	0,986	
	DGM 2	0,982	
	DGM 3	0,988	
VOLUMES SAMPLED	DGM 1st hr	11,395	SCft
	DGM 1	26,731	SCft
	DGM 2	28,411	SCft
	DGM 3	21,846	SCft

TOTAL TUNNEL VOLUME : 55375

SAMPLE RATIOS

Sample Train 1st Hr:	1845,5
Sample Train 1:	2071,6
Sample Train 2:	1949,1

Paticulate concentration

Sample Train 1st Hr	**0,000272**	g/dscf
Sample Train 1	**0,000101**	g/dscf
Sample Train 2	**0,000101**	g/dscf
Room	**0,000005**	g/dscf

TOTAL EMISSIONS

Sample Train 1st Hr	**5,62**	g
Sample Train 1	**5,34**	g
Sample Train 2	**5,32**	g

EMISSION RATES

Sample Train 1st Hr	**5,62**	g/hr
Sample Train 1	**2,03**	g/hr
Sample Train 2	**2,02**	g/hr

	Train 1	Train 2	Train 1st Hr
Cs	0,000101	0,00010067	0,0002721

RESULTS

Average emission rate: 2,02 g/hr

Burn Rate : 2,25 Dry kg/hr

BAROMETRIC PRESSURE

Average:	29,92864373	In Hg
Start:	29,94340873	In Hg
End:	29,91387874	In Hg

DGM VALUES

DGM 1st hr	Final:	2646,500	Cuft
	Initial:	2634,500	Cuft
DGM 1	Final:	30442,063	Cuft
	Initial:	30414,070	Cuft
DGM 2	Final:	21573,893	Cuft
	Initial:	21544,048	Cuft
DGM #3	Final:	16696,474	Cuft
	Initial:	16674,336	Cuft

TEMPERATURES

DGM 1st hr	538,783	°R
DGM 1	535,505	°R
DGM 2	537,533	°R

CALIBRATION FACTORS

DGM 1st hr	0,9978
DGM 1	0,9936
DGM 2	0,9946
DGM #3	0,9982

TUNNEL FLOW RATE: 350,5 Dscfm

PARTICULATE CATCH

Total Sample Train 1:	2,70	mg
Total Sample Train 2:	2,86	mg
Total Sample Train 1 1st hour:	3,10	mg

DEVIATION: 0,18%

DATA 2023-10-18 EPA PI 20294 RUN 6 CAT 4 OTHER CATALYST

preburn / preload

Time acquisition minutes	Flue temp °F	Room temp °F	Tunnel dry bulb °F	Catalyst up °F	scale lbs	Tunnel Velocity Pressure in. Wc	Right °F	Back °F	bottom °F	Top °F	Left °F
1	71,26	69,86	70,17	72,79	5,27	0,0773	72,72	74,01	73,89	73,21	73,02
2	97,88	70,05	75,82	101,92	5,07	0,0762	72,71	73,99	77,31	73,23	73,51
3	158,61	70,01	77,82	190,07	4,97	0,0763	72,76	74,03	114,54	73,28	73,52
4	140,80	70,02	72,34	166,55	5,07	0,0763	72,94	74,23	115,60	73,37	73,87
5	128,33	70,03	71,84	151,22	5,27	0,0763	73,31	74,51	112,71	73,64	74,36
6	119,85	69,94	71,34	136,26	4,86	0,0762	73,72	74,83	110,84	73,81	74,97
7	117,14	69,91	74,45	149,90	5,24	0,0763	74,16	75,13	111,75	74,07	75,81
8	131,85	69,85	76,06	169,40	4,97	0,0762	74,59	75,50	119,01	74,42	76,17
9	175,50	69,89	77,58	230,51	4,82	0,0758	75,07	75,90	126,29	74,77	76,76
10	194,89	69,90	75,60	219,29	4,77	0,0763	75,50	76,39	130,84	75,21	77,86
11	219,74	69,92	76,56	212,29	4,67	0,0763	76,25	76,99	131,46	75,86	78,87
12	237,96	69,97	77,40	211,09	4,57	0,0763	77,21	77,77	134,03	76,67	80,40
13	270,31	69,96	79,65	234,49	4,47	0,0748	78,39	78,75	136,39	77,75	82,29
14	307,83	69,97	81,61	259,39	4,37	0,0758	79,86	79,86	139,45	79,12	84,53
15	350,93	70,02	85,03	323,10	4,27	0,0763	81,83	81,34	143,67	81,06	87,56
16	391,74	70,06	88,06	384,22	4,07	0,0742	83,81	83,18	150,42	83,47	91,16
17	428,93	70,07	90,87	453,61	3,87	0,0758	86,46	85,59	159,21	86,65	95,51
18	471,54	70,16	94,41	525,00	3,77	0,0743	89,66	88,68	177,96	90,64	100,77
19	502,27	70,22	97,09	574,10	3,57	0,0758	93,67	92,51	205,37	95,66	107,11
20	524,89	70,31	99,75	600,95	3,27	0,0739	98,53	97,03	233,66	101,81	114,26
21	541,47	70,38	102,27	608,27	3,17	0,0742	104,33	102,05	266,66	109,02	122,08
22	556,64	70,54	104,99	636,34	2,97	0,0737	110,91	107,53	296,16	116,76	130,67
23	570,59	70,53	104,94	653,73	2,77	0,0747	118,53	113,90	323,69	125,29	139,93
24	584,45	70,67	104,48	660,26	2,56	0,0753	126,82	119,90	350,77	134,26	150,22
25	558,36	70,76	104,77	639,63	2,47	0,0734	136,76	126,91	373,20	143,96	161,11
26	564,19	70,77	104,76	633,66	2,27	0,0758	146,53	134,06	396,05	153,30	172,33
27	555,46	70,72	104,64	636,66	2,17	0,0763	156,22	141,76	411,29	161,97	183,72
28	550,26	70,81	103,82	640,00	1,97	0,0737	167,95	149,85	424,63	170,71	194,67
29	540,81	70,73	102,93	627,32	1,87	0,0742	180,10	158,55	431,29	180,00	205,91
30	513,64	70,81	99,92	601,16	1,77	0,0742	192,81	167,74	430,63	188,40	218,67
31	496,44	70,76	98,41	577,04	1,66	0,0737	205,59	177,06	428,74	196,81	228,96
32	480,89	70,82	97,38	558,29	1,57	0,0763	217,36	186,96	434,21	204,06	237,03
33	468,58	70,76	96,81	540,90	1,47	0,0737	228,27	196,27	445,64	211,13	246,48
34	460,79	70,72	95,99	536,66	1,37	0,0763	237,96	205,73	452,14	217,24	255,26
35	483,22	70,71	94,93	526,29	1,27	0,0763	246,66	214,82	454,05	222,96	263,63
36	474,26	70,82	146,21	566,51	1,17	0,0732	255,23	223,59	460,43	228,09	271,59
37	426,35	70,74	144,26	461,70	18,56	0,0732	262,76	232,73	467,61	232,25	278,96
38	384,79	70,82	117,59	365,42	17,96	0,0763	268,91	241,21	462,71	235,79	285,64
39	369,14	70,71	114,76	386,36	17,66	0,0722	273,49	246,40	453,23	238,51	291,04
40	346,11	70,64	107,65	367,53	17,66	0,0732	276,14	252,09	442,61	239,30	295,75
41	323,69	70,56	106,60	310,61	17,76	0,0737	276,46	256,13	432,89	240,66	299,31
42	294,15	70,66	102,61	244,44	17,65	0,0727	279,16	262,10	423,95	243,43	301,94
43	276,80	70,77	101,14	237,22	17,76	0,0742	278,67	265,00	415,50	245,72	303,60
44	267,21	70,66	99,70	238,89	17,76	0,0737	277,75	267,22	408,22	246,41	304,30
45	259,41	70,79	98,27	250,79	17,66	0,0740	276,23	268,43	403,45	245,84	304,22
46	260,96	70,73	96,32	297,22	17,56	0,0737	274,30	269,63	401,12	244,91	303,35
47	260,74	70,65	96,19	292,22	17,56	0,0763	271,83	270,53	399,96	245,11	301,96
48	263,30	70,57	99,54	326,70	17,46	0,0742	269,05	271,16	398,07	243,69	300,21
49	260,71	70,62	100,95	369,77	17,36	0,0758	266,07	271,66	395,79	242,97	298,10
50	263,42	70,62	99,74	367,64	17,26	0,0755	262,66	272,36	393,26	242,01	296,11
51	264,46	70,59	95,61	363,49	17,16	0,0758	259,75	272,67	392,64	240,29	294,35
52	269,53	70,56	93,67	306,17	17,06	0,0768	256,26	269,59	393,64	231,02	293,02
53	262,64	70,54	91,72	326,21	17,06	0,0763	253,62	268,16	393,66	225,63	291,94
54	255,69	70,51	91,46	329,49	17,06	0,0763	250,92	267,20	392,93	221,84	291,16
55	244,64	70,56	92,59	272,46	17,06	0,0763	248,07	265,76	392,16	218,20	290,47
56	228,61	70,56	90,66	282,61	16,96	0,0742	245,22	264,25	393,42	215,24	289,71
57	227,22	70,55	89,91	350,36	16,92	0,0727	242,47	262,40	395,10	212,00	288,79
58	223,26	70,62	88,99	335,16	16,88	0,0758	239,59	260,63	396,77	208,63	287,75
59	217,83	70,53	89,09	335,04	16,86	0,0743	236,99	258,61	398,55	205,76	286,63
60	212,76	70,56	88,46	335,10	16,76	0,0732	234,16	256,40	400,31	203,14	285,36
61	208,41	70,58	88,03	328,14	16,66	0,0763	231,72	254,99	402,29	200,11	284,04
62	217,11	70,60	89,66	363,34	16,66	0,0753	229,29	252,66	402,53	197,08	282,56
63	223,50	70,47	89,63	379,93	16,64	0,0763	226,70	250,76	403,66	193,88	281,16
64	236,74	70,56	92,36	392,77	16,51	0,0751	224,44	248,95	408,43	191,13	279,80
65	242,82	70,57	92,80	395,04	16,36	0,0763	221,86	246,47	413,97	188,34	278,97
66	228,97	70,54	81,23	335,64	16,36	0,0758	220,13	243,93	417,28	185,60	278,27
67	218,46	70,56	78,67	360,53	16,26	0,0758	218,21	242,23	418,66	183,17	277,94
68	209,16	70,56	78,59	349,74	16,26	0,0758	216,54	240,26	419,06	180,65	277,62
69	203,69	70,60	77,47	342,66	16,16	0,0762	214,93	237,73	418,67	178,50	277,36
70	198,42	70,61	77,10	326,34	16,16	0,0758	213,19	236,01	418,15	176,30	277,13
71	193,94	70,62	76,63	318,54	16,15	0,0758	211,65	234,06	416,66	173,95	276,69
72	190,70	70,54	76,57	314,09	16,06	0,0758	210,59	232,10	415,46	171,70	276,20
73	187,96	70,59	76,40	311,22	16,06	0,0748	209,11	230,00	414,04	169,59	275,64
74	185,79	70,57	76,03	309,32	15,96	0,0758	208,58	227,49	412,75	168,17	274,96
75	184,13	70,57	76,14	306,02	15,96	0,0763	207,00	225,76	411,57	166,17	274,15
76	182,54	70,57	75,99	306,63	15,86	0,0763	205,90	224,06	410,47	164,24	273,26
77	181,30	70,59	75,96	306,93	15,86	0,0762	204,87	222,07	409,53	162,56	272,40
78	180,43	70,61	75,86	309,89	15,76	0,0752	203,89	220,56	408,69	160,75	271,48
79	180,71	70,60	75,95	316,47	15,76	0,0763	202,55	218,82	407,87	158,85	270,54
80	181,75	70,61	75,96	325,76	15,66	0,0768	202,20	217,11	407,07	157,03	269,57
81	182,91	70,66	76,01	333,97	15,67	0,0768	201,59	215,26	406,46	155,76	268,75
82	183,62	70,60	75,92	339,26	15,56	0,0757	200,61	213,56	406,04	154,59	268,01
83	184,07	70,59	75,85	337,51	15,46	0,0773	200,19	212,08	405,62	153,05	267,46
84	184,44	70,56	75,96	334,04	15,47	0,0763	199,44	210,43	405,66	151,90	267,15
85	184,15	70,65	75,95	329,67	15,36	0,0742	198,99	209,35	405,65	150,60	266,62
86	184,64	70,62	76,13	329,74	15,26	0,0762	198,53	207,73	405,76	149,47	266,74
87	186,33	70,66	76,09	333,63	15,26	0,0758	198,35	206,66	406,07	148,60	266,63
88	187,61	70,66	76,10	335,43	15,16	0,0743	198,39	205,60	406,11	147,52	266,36
89	188,62	70,66	75,92	327,37	15,06	0,0758	198,27	204,26	406,06	146,56	266,03
90	188,03	70,72	76,04	327,30	15,06	0,0763	198,39	202,58	406,07	145,59	265,57
91	193,27	70,77	76,31	369,61	14,96	0,0763	198,68	201,57	406,18	145,03	265,11
92	202,55	70,76	76,86	456,77	14,86	0,0753	198,71	201,10	406,14	144,40	264,71
93	210,45	70,75	77,11	496,11	14,76	0,0762	198,95	199,99	405,99	143,67	264,26
94	217,03	70,76	77,26	501,05	14,66	0,0767	199,21	199,66	405,92	143,04	263,80
95	229,72	70,79	76,95	577,46	14,56	0,0766	199,33	199,35	405,76	142,41	263,53

DATA 2023-10-18 EPA PI 2025H RUN 6 CAT 4 OTHER CATALYST
preburn / preload

96	268,74	70,79	79,93	675,45	14,48	0,0758	199,78	199,25	405,96	142,28	260,64
97	264,33	70,77	80,73	669,06	14,38	0,0763	200,82	199,80	406,37	142,42	260,64
98	300,50	70,74	61,56	725,36	14,18	0,0763	201,44	200,11	407,21	142,86	260,55
99	318,43	70,80	60,87	760,05	13,98	0,0773	202,49	200,90	408,61	142,99	260,18
100	332,01	70,83	60,33	806,30	13,88	0,0763	203,78	202,25	409,71	143,80	260,72
101	340,88	70,84	64,48	828,07	13,68	0,0763	205,53	204,22	410,93	144,80	260,83
102	357,46	70,88	62,71	894,90	13,48	0,0763	207,29	207,07	412,39	146,53	260,21
103	375,37	70,89	66,86	931,71	13,38	0,0758	209,53	210,45	414,08	148,18	260,79
104	394,12	71,06	68,58	938,97	13,18	0,0773	212,54	212,91	415,54	150,18	264,78
105	408,84	70,98	69,14	958,18	12,98	0,0758	214,73	216,87	416,66	157,66	268,21
106	421,80	71,15	96,93	1001,83	12,88	0,0763	217,74	223,62	417,76	160,36	267,91
107	431,84	71,24	90,72	1022,13	12,48	0,0748	221,19	229,79	418,58	169,69	269,86
108	438,86	71,20	91,21	1017,81	12,28	0,0763	224,45	234,80	418,80	176,56	271,76
109	442,41	71,24	91,46	1012,39	12,17	0,0757	227,81	240,02	418,41	182,51	275,84
110	444,22	71,22	91,57	1008,02	11,98	0,0763	231,22	245,93	417,74	191,40	279,05
111	446,13	71,40	91,53	992,96	11,78	0,0763	234,89	251,66	417,07	199,39	282,25
112	448,15	71,49	92,14	986,28	11,58	0,0773	238,29	257,46	416,44	207,06	285,38
113	453,90	71,48	92,57	1034,40	11,38	0,0763	242,09	263,58	416,54	215,14	288,46
114	459,86	71,47	92,99	1042,86	11,17	0,0748	246,10	269,35	414,76	222,80	291,53
115	464,90	71,65	93,05	1058,00	10,98	0,0763	250,59	275,16	413,99	230,48	294,66
116	467,66	71,64	93,37	1034,09	10,78	0,0773	255,19	281,40	413,27	238,49	297,73
117	468,87	71,64	93,15	1013,49	10,58	0,0773	259,89	287,39	412,66	246,26	301,08
118	468,83	71,78	93,43	998,97	10,47	0,0763	264,70	292,96	412,09	253,49	304,49
119	468,82	71,82	93,58	976,19	10,28	0,0758	269,01	298,84	411,23	261,07	308,12
120	468,50	71,94	93,51	1012,21	10,08	0,0748	272,58	304,76	410,28	268,75	312,01
121	470,49	72,00	93,91	1022,81	9,87	0,0743	277,77	310,49	408,97	276,49	316,17
122	474,11	71,94	93,95	1052,81	9,68	0,0778	282,97	316,77	407,24	283,78	320,17
123	477,44	72,10	94,05	1071,05	9,58	0,0760	287,70	321,86	405,12	290,25	324,83
124	479,50	72,24	94,89	1087,39	9,37	0,0763	293,11	327,74	403,14	297,05	329,26
125	482,01	72,20	94,43	1072,76	9,17	0,0758	298,48	333,24	401,38	303,42	333,96
126	484,24	71,89	94,71	1084,65	8,98	0,0763	305,73	338,30	399,68	309,54	338,82
127	486,90	72,33	95,34	1094,85	8,78	0,0754	311,19	344,56	398,30	315,91	343,38
128	489,27	72,47	95,37	1102,89	8,57	0,0758	317,34	350,01	396,67	322,44	348,28
129	491,83	72,50	95,33	1111,59	8,37	0,0773	324,39	355,42	395,68	328,23	353,16
130	493,31	72,38	95,93	1115,03	8,28	0,0763	331,50	361,18	394,33	334,45	357,89
131	495,06	72,50	96,12	1119,83	8,08	0,0763	338,31	366,39	393,21	340,82	362,77
132	496,80	72,66	96,42	1123,36	7,79	0,0763	345,43	371,27	392,36	346,86	367,63
133	497,57	72,56	96,56	1119,51	7,67	0,0763	352,74	376,28	391,93	351,77	372,76
134	498,33	72,74	96,18	1119,99	7,48	0,0758	360,19	381,10	391,75	357,02	377,96
135	499,06	72,66	96,40	1119,91	7,28	0,0763	366,82	385,51	391,64	362,72	383,17
136	499,82	72,65	96,59	1119,23	7,17	0,0763	372,36	391,14	391,75	367,96	388,26
137	498,96	72,96	96,41	1112,14	6,97	0,0758	378,13	396,07	391,97	373,42	393,45
138	499,56	73,04	96,39	1101,20	6,78	0,0763	385,06	400,47	392,69	378,22	398,57
139	499,58	73,10	96,50	1108,14	6,68	0,0778	391,21	405,21	393,63	382,83	403,67
140	500,71	73,01	96,39	1114,36	6,47	0,0761	396,96	409,46	394,72	387,69	408,73
141	500,96	72,77	96,82	1119,30	6,27	0,0763	402,27	414,86	396,30	392,85	413,88
142	501,23	73,19	96,17	1123,42	6,18	0,0763	407,53	419,78	398,28	396,95	418,96
143	502,87	72,97	96,27	1130,23	5,98	0,0763	412,01	424,72	400,50	401,25	424,04
144	503,09	73,13	96,63	1133,81	5,87	0,0767	416,40	429,26	402,71	404,94	429,08
145	503,76	73,10	96,59	1130,57	5,87	0,0766	421,88	434,79	405,03	408,56	433,70
146	503,80	73,21	96,58	1120,70	5,87	0,0758	426,12	439,01	411,98	412,61	438,89
147	501,15	73,09	96,61	1107,86	5,36	0,0763	434,11	444,30	415,09	415,36	443,44
148	498,49	73,21	96,13	1109,25	5,26	0,0763	438,66	453,11	419,64	418,72	448,22
149	497,45	73,20	96,30	1111,34	5,07	0,0778	444,14	454,51	423,89	421,51	452,83
150	496,58	72,72	96,95	1116,58	4,97	0,0763	448,19	459,56	427,15	422,94	457,23
151	496,18	73,17	96,27	1109,35	4,87	0,0763	452,70	466,11	430,17	424,91	461,76
152	494,15	73,02	96,28	1103,80	4,66	0,0766	456,53	470,94	432,47	426,09	466,32
153	491,19	73,24	96,77	1092,28	4,57	0,0778	460,82	476,56	437,15	427,47	471,06
154	488,63	73,26	96,73	1088,80	4,47	0,0773	466,23	481,77	441,25	428,74	475,87
155	486,36	73,25	96,48	1085,16	4,37	0,0773	470,87	486,97	445,65	429,09	480,25
156	484,99	73,15	96,40	1080,20	4,23	0,0766	475,89	491,50	450,31	429,76	484,83
157	482,84	73,27	96,42	1068,51	4,08	0,0763	479,75	496,21	455,09	429,80	489,29
158	479,71	73,17	94,97	1033,91	3,98	0,0763	484,03	500,97	460,21	430,18	493,86
159	476,96	73,14	94,65	1011,52	3,87	0,0767	488,99	505,20	465,63	430,83	498,13
160	473,81	73,28	93,92	985,96	3,77	0,0763	492,54	509,59	471,18	429,88	502,19
161	467,59	73,23	93,93	961,79	3,66	0,0766	492,75	513,35	476,98	430,07	506,58
162	460,73	73,03	92,81	930,13	3,57	0,0763	496,07	515,17	483,11	430,46	509,37
163	453,45	72,93	92,70	909,30	3,57	0,0773	498,92	518,89	489,48	431,35	513,22
164	446,96	73,18	92,23	895,36	3,56	0,0763	500,83	523,25	496,06	429,36	515,15
165	439,60	72,84	91,71	879,27	3,47	0,0758	503,32	521,41	502,96	427,05	518,36
166	434,25	73,22	91,13	863,22	3,41	0,0763	505,03	523,38	509,43	425,54	521,34
167	428,37	73,11	90,87	852,31	3,47	0,0773	505,66	524,35	516,16	424,31	524,07
168	453,74	73,19	111,15	895,06	3,36	0,0758	506,42	525,12	524,03	422,46	526,17

POLYTESTS
TESTING THROUGH YOUR REALITY

Date: 2023-10-18 Manufacturer: Hearthstone Model: 8024

Project #: PI 20294 Run: 6 Tech: MM Reviewer: DO

- Landing 52 LBS Start Fire
- After 2 min close Door
- Fan off
- At 132 Bs insert ~~ba~~ preload open Fan (High) and close by part
- After 15 min close Door
- At 3.4 LBS open Door Rack coal Bed close Door
- After 2 min insert load and close Fan
- close Door immediately
- After 30 min open Fan (High)

TEST LOAD CONFIGURATION

POLYTESTS

PRE / POST CHECKS

Date: 2023-10-18 Manufacturer: Regency Model: 8024

Project #: P1 20299 Run: 6 Techs: MM Reviewer: VP

Moisture Meter Calibration Check:	Equipment #	Time	12%	22%
	Em. 334	7:00	ok	ok

	Pre-Test	Post-Test

Facility Conditions:

Air Velocity from less than 2 feet	0 (max50 Fpm)	0 (max50 Fpm)
Smoke Capture Check (tunnel velocity)	ok	NA
Picture	4 sides ok	ok

Wood Heater Conditions:

Date Wood Heater Stack Cleaned	2023-10-18
Date Dilution Tunnel Cleaned	2023-10-18
Induced Draft Check (min 0.005 H2O)	ok
Traverse before ignition	ok

Temperature System:

Ambient (65°-80°F)	ok °F

Proportional Checks:

Thermocouple check	ok	
Pitot Clean	ok	
Pitot verification	ok	
Pictures for report	Side	ok
	Coal bed	ok
	Load	ok
	Load in stove	ok
	Fuel adjustment	ok
Load Length 5/6 of firebox Length +- 1inch		ok

POLYTESTS
TESTING THROUGH YOUR REALITY

Date: 2023-10-18 Manufacturer: Hearthstone Model: 8024

Project #: PI 20294 Run: 6 Tech: MM Reviewer: DP

Leakage Checks Tunnel Samplers

	System 1st hour		System 1		System 2		Ambient	
Unplugged Flow Rate = .25cfm	Pre-Test ASTM (-15) CSA B415 (-5)	Post-Test (Max test)	Pre-Test ASTM (-15) CSA B415 (-5)	Post-Test (Max test)	Pre-Test ASTM (-15) CSA B415 (-5)	Post-Test (Max test)	Pre-Test ASTM (-15) CSA B415 (-5)	Post-Test (Max test)
Vacuum (inches Hg.)	-10	-10	-10	-10	-10	-10	-10	-10
Final 1minute DGM (Liter)	2634 44	2644 59	861 229 18	862 024 12	610 059 04	610 906 00	472 161 87	472 791 98
Initial 1minute DGM (Liter)	2634 44	2644 59	861 229 08	862 024 14	610 059 04	610 906 00	472 161 87	472 791 98
Change (Liter)	Ø	Ø	0.10	0.02	Ø	Ø	Ø	Ø 0.10
Allowable leakage .04 x Sample rate or 0.28Lpm CSA B415 (0.56)								
Check OK	ok	ok	ok	ok	ok	ok	ok	ok

POLYTESTS

Date: 2023-10-18 Manufacturer: Hearthstone Model: 8024

Project #: PI 20294 Run: 6 Tech: MM Reviewer: [illegible]

Leakage Checks Flue Gas Sampler

Plugged Probe	Pre-Test	Post Test
Vacuum (inches Hg.)	-5	-5
Rotameter Reading (mml/min.)	0	0
Flow Rate (lpm)	1.5	1.5
Allowable (.02 x Sample Rate)	30	30
Check OK	ok	ok

Leakage Checks Pitot

Plugged Probe	Pre-Test 3 H2o static	Pre-Test 0.4-0.5 H2o velocity	Post Test 3 H2o Static	Post Test 0.4-0.5 H2o velocity
Vacuum (inches Hg.)	3	.4	3	.4
Check OK (no change after 15 sec.)	ok	ok	ok	ok

POLYTESTS
TESTING THROUGH YOUR REALITY

Date: 2023-10-18 Manufacturer: Heartstone Model: 6024

Project #: PT 2294 Run: 6 Tech: MM Reviewer:

Scale Type	Audit		Measured Weight
	Equipment #	Weight	
Platform	EM-090	44 lbs, Class F	44 lbs
Platform	EM-205	10 00 Kg, Class F	10 00 Kg
Wood	EM-090	44 lbs, Class F	44 lbs
Analytical	EM-335	100 mg, Class S	100 mg
Analytical	EM-129	200 g, Class S	200 g

LIMITS OF WEIGHT RANGES

ANALYTICAL SCALE:.....50%-150% of dry filter weight, ± 0.1 mg
PLATFORM SCALE..... 20%-80% of ideal test load weight, ± 0.1 lbs or 1%
WOOD SCALE..... 20%-80% of ideal test load weight, ± 0.01 lbs or 1%

POLYTESTS

CONTINUOUS ANALYZERS

Date: 20-30-10-18 Manufacturer: Horiba Model: 8034

Project #: QI 20-94 Run: 6 Tech: MP Reviewer: BD

FOR TUNNELS < 12 in

Barometric pressure (P_{ba}) 101.4 (KPa.) Static pressure (P_g) 0.19 (inches w.c.)
Inside diameter: Port A _____ Port B _____
Tunnel cross sectional area: .1963Ft²
Pitot tube type: Standard

Traverse Point	Position (inches)			Velocity Head Δ_p (inches H_2O)	Tunnel Temperature (°F)
Tunnel diameter	6 po	7 po	8 po		
A - Centroid	3.00	3.50	4	0.077	69.95
B - Centroid	3.00	3.50	4	0.076	69.98
A-1	0.40	0.50	0.50	0.063	69.95
A-2	1.50	1.75	2	0.077	69.91
A-3	4.50	5.25	6	0.074	69.91
A-4	5.60	6.5	7.5	0.063	69.96
B-1	0.40	0.50	0.50	0.062	69.98
B-2	1.50	1.75	2	0.073	70.00
B-3	4.50	5.25	6	0.072	70.00
B-4	5.60	6.5	7.5	0.062	70.01
				AVERAGE	

CONTINUOUS ANALYZERS

Date:_____ Manufacturer:_____ Model:_____

Project #: _____ Run:_____ Tech:_____ Reviewer:_____

FOR TUNNELS 12 in

Barometric pressure (P_{bar}) _____ (KPa.) Static pressure (P_g) _____ (inches w.c.)
Pitot tube type: Standard

Traverse Point	Position (inches)	Velocity Head Δ_p (inches H_2O)	Tunnel Temperature (°F)
A Center	6		
B Center	6		
A-1	0.53		
A-2	1.75		
A-3	3.55		
A-4	8.45		
A-5	10.25		
A-6	11.47		
B-1	0.53		
B-2	1.75	N.A	
B-3	3.55		
B-4	8.45		
B-5	10.25		
B-6	11.47		

POLYTESTS

CONTINUOUS ANALYZERS

Date: 2023-10- Manufacturer: Hearthstone Model: 8024

Project #: pI 30194 Run: 6 Tech: M.P. Reviewer: DP

Pre-Test (Adjust and Record)

	ZERO		SPAN		CAL. (Record Only)	
CO	0	0	3,030	3,000	1,019	1,000
Tolerance CO	0	+/- 0.02	0030	+/- 0.15	0019	+/- 0.05
CO_2	0	0	17,95	18,00	984	1000
Tolerance CO2	0	+/- 0.02	0,05	+/- 0.5	016	+/- 0.5
O_2 informative CSA B415 calculated value	na	na	na	na	na	na
	Actual	Should Be	Actual	Should Be	Actual	Should Be

Post Test (Record Only)

	Zero	Span	Cal.	Zero Drift	Limit	Span Drift	Limit	Cal. Drift	Limit	OK?	Not OK*
CO	0	3,027	1020	0	0.02	0003	0.15	0,001	0.05	✓	
CO_2	0	17,99	986	0	0.02	004	0.5	002	0.5	✓	

POLYTESTS
TESTING THROUGH YOUR REALITY

TEST DATA LOG

Date: 2023-10-18 Manufacturer: Heathflow Model: 8024

Project #: PI 20-94 Run: 6 Tech: MR Reviewer: BP

RAW DRY GAS METER READINGS

		System 1st hour	System 1	System 2	Blank
Test	Final (Liter)	2646.50	862023.22	610904.60	472791.48 MR
	Initial (Liter)	2634.50	861230.54 ~~610059.48~~ MR	610059.98	472164.60

AMBIENT CONDITIONS

	Before	After
Barometer (kPa):	101.4	101.3
Dry Bulb (F):	72.6	76.1
Humidity (%):	41.7	40.3

POLYTESTS

FUEL DATA

Date: 2023-10-18 Manufacturer: Hearthstone Model: 8024

Project #: PJ 20294 Run: 6 Tech: MM Reviewer: DP

FUEL DESCRIPTION:

Type of wood:

PRE-TEST LOAD

Piece Size	Weight	Meter Moisture Content (% dry) *				
1 1/2 x 3 1/2 x 1.75 in.	1982 lbs.	20.5	20.6	20.8	20.7	20.7
1 1/2 x 3 1/2 x 1.75 in.	1858 lbs.	21.0	21.0	20.9	20.9	20.9
1 1/2 x 3 1/2 x 1.75 in.	2012 lbs.	19.9	20.0	20.0	20.0	19.9
1 1/2 x 3 1/2 x 1.75 in.	2058 lbs.	21.1	21.0	21.0	21.0	21.1
1 1/2 x 3 1/2 x 12 in.	1454 lbs.	21.1	21.0	21.3	21.2	21.2
1 1/2 x 3 1/2 x 12 in.	1548 lbs.	21.7	22.0	22.0	21.8	21.7
1 1/2 x 3 1/2 x 12 in.	1594 lbs.	22.0	22.1	22.0	22.1	22.2
1 1/2 x 3 1/2 x 12 in.	1426 lbs.	20.1	20.0	20.1	20.1	20.2
1 1/2 x 3 1/2 x 12 in.	1476 lbs.	19.8	19.7	19.8	19.7	19.7
1 1/2 x 3 1/2 x 12 in.	1584 lbs.	19.7	19.9	19.8	19.6	19.7
x x in.	lbs.					
x x in.	lbs.					
x x in.	lbs.					
x x in.	lbs.					
x x in.	lbs.					
x x in.	lbs.					
x x in.	lbs.					
x x in.	lbs.					
x x in.	lbs.					
x x in.	lbs.					
x x in.	lbs.					
x x in.	lbs.					
x x in.	lbs.					

TEST LOAD WEIGHT: 16 994 lbs

POLYTESTS

FUEL DATA

Date: 2023-10-18 Manufacturer: Hearthstone Model: 8024

Project #: pT 20294 Run: 6 Tech: MK Reviewer: SD

FUEL DESCRIPTION:

Type of wood:

TEST LOAD

Piece Size		Weight		Meter Moisture Content (% dry)*				
1 1/2 x 3 1/2 x 12	in.	1372	lbs.	20.9	21.0	20.9	20.9	20.8
1 1/2 x 3 1/2 x 12	in.	1378	lbs.	21.2	21.1	21.3	21.0	21.4
1 1/2 x 3 1/2 x 12	in.	1388	lbs.	21.0	21.1	21.1	21.1	21.2
3 1/2 x 3 1/2 x 12	in.	4454	lbs.	21.8	21.3	21.6	21.5	21.5
2 1/2 x 3 1/2 x 12	in.	4388	lbs.	21.1	21.4	21.3	21.3	21.0
x	x in.		lbs.					
1 1/2 x 3/4 x 5	in.	0.104	lbs.			1.96		
1 1/2 x 3/4 x 5	in.	0.108	lbs.			1.94		
1 1/2 x 3/4 x 5	in.	0.098	lbs.			1.92		
1 1/2 x 3/4 x 5	in.	0.088	lbs.			1.90		
1 1/2 x 3/4 x 5	in.	0.086	lbs.			1.98		
1 1/2 x 3/4 x 5	in.	0.092	lbs.			1.93		
1 1/2 x 3/4 x 5	in.	0.104	lbs.			2.00		
1 1/2 x 3/4 x 5	in.	0.114	lbs.			2.02		
1 1/2 x 3/4 x 5	in.	0.110	lbs.			2.01		
1 1/2 x 3/4 x 5	in.	0.098	lbs.			2.03		
1 1/2 x 3/4 x 5	in.	0.110	lbs.			2.04		
1 1/2 x 3/4 x 5	in.	0.136	lbs.			2.03		
1 1/2 x 3/4 x 5	in.	0.138	lbs.			2.03		
1 1/2 x 3/4 x 5	in.	0.120	lbs.			2.02		
1 1/2 x 3/4 x 5	in.	0.108	lbs.			2.04		
1 1/2 x 3/4 x 5	in.	0.100	lbs.			2.06		
x	x in.		lbs.					
x	x in.		lbs.					
x	x in.		lbs.					
x	x in.		lbs.					
x	x in.		lbs.					

TEST LOAD WEIGHT: 15.83 lbs Min 20%: ..... Max 25%: .....

POLYTESTS

DILUTION TUNNEL PARTICULATE SAMPLER DATA

Date: 2023-10-17 Manufacturer: Hearthstone Model: 8024

Project #: PI 20294 Run: M 8 6 Tech: MM Reviewer: DO

Pre-test Weight Record		TEST FILTERS					
		SYSTEM 1st hour			SYSTEM 1		
		Probe & Housing Number	Front & Back Filter Number	gaskets	Probe & Housing Number	Front & Back Filter Number	gaskets
Date	Time	35	120 - 121	6	38	122 - 123	11
2023-10-17	17:00	109 2821	0 2440	34 7515	110 4346	0 2440	34 4145
2023-10-18	9:00	109 2820	0 2440	34 7516	110 4347	0 2441	34 4146

Post-test Weight Record		TEST FILTERS					
		SYSTEM 1st hour			SYSTEM 1		
		Probe & Housing Number	Front & Back Filter Number	gaskets	Probe & Housing Number	Front & Back Filter Number	gaskets
Date	Time	35	120 - 121	6	38	122 - 123	11
2023-10-18	14:00	109 2826	0 2459	34 7548 ~~34 7516~~	110 4348	0 2459	34 4169
2023-10-23	8:00	109 2821	0 2456	34 7530	110 4348	0 2458	34 4155
2023-10-24	8:00	109 2821	0 2456	34 7530	110 4348	0 2458	34 4155

POLYTESTS

DILUTION TUNNEL PARTICULATE SAMPLER DATA

Date: 2023-10-17 Manufacturer: Hearthstone Model: 8024

Project #: PI 20294 Run: 6 Tech: MM Reviewer: DO

		TEST FILTERS			
		SYSTEM 2			
Pre-test Weight Record		Probe & Housing Number	Front & Back Filter Number	gaskets	Blank Filter
Date	Time	41	124 125	37	126
2023-10-17	17:00	110 3652	0 2436	33 4729	0 1214
2023-10-18	9:00	110 3653	0 2437	33 4728	0 1215

		TEST FILTERS				
		SYSTEM 2				
Post-test Weight Record		Probe & Housing Number	Front & Back Filter Number	gaskets	Blank Filter	End test time and date
Date	Time	41	124 125	37	126	13:15
2023-10-18	14:00	110 3656	0 2446	33 4773	0 1216	
2023-10-23	8:00	110 3654	0 2446	33 4748	0 1216	2023-10-18
2023-10-24	8:00	110 3654	0 2445	33 4748	0 1216	

Paramètres

Tous les facteurs de corrections et autres paramètres qui peuvent être modifiés par l'utilisateur du fichier sont regroupés ici.

Code verrouillage:	HEA

Description du test

Test standard	EPA
Run #	7
Date	19-10-2023
Technicien	M.M
Project #	PI 20294

Description de l'unité

Manufacturer	HEARTHSTONE	
Modèle	8024	
Combustion system	Cat	
Appliance type	WOODSTOVE	
Firebox volume	2,17	cu ft.
Appliance weight empty	n.a	lbs
Appliance weight full	n.a	lbs

Paramètres du test

Logging time	1	min
Manufacturer's rated heat output	n.a	BTU/h Donnée fournie par le manfacturier
Targeted category	1	
Targeted output	n.a	BTU/h
Cp steel	n.a	BTU/lb-°F

Échantillonnage

Blank sampling rate	0,20	cuft/min
Internal probe diameter	0,18	in.
Calibration Factor (DGM #1):	0,994	
Equipment number (DGM #1):	EM 178	Dimensionless
Calibration Factor (DGM #2):	0,995	
Equipment number (DGM #2):	EM 318	Dimensionless
Calibration Factor (DGM #3):	0,998	
Equipment number (DGM #3):	EM 179	Dimensionless
Calibration Factor (DGM 1st Hr):	0,998	
Equipment number (DGM 1st Hr):	EM 130	Dimensionless

Tunnel

Targeted tunnel flow rate	300	scfm
Tunnel diameter	8	in.
Molecular weight	29	29 as per ASTM E2515
Pitot tube type	Standard	
Pitot tube coefficient	0,99	Dimensionless

Project nu.	PI 20294
Date	19-10-2023
Technicien	M.M

Fuel data

Fuel type	Dimension	
Fuel specie	D. Fir	
HHV	19810,0	kJ/kg
%C	48,7	
%H	6,9	
%O	43,9	
%Ash	0,5	
HHV	8519,2	Btu/lb
LHV	7451,0	Btu/lb

Default Fuel Values

	D. Fir	Oak/Maple
HHV	19 810	19 887
%C	48,73	50
%H	6,87	6,6
%O	43,9	42,9
%Ash	0,5	0,5
HHV (Btu/lb)	8519	8552
LHV (Btu/lb)	7451	7480

	Start	End
Barometer (kPa):	101,4	101,2
Barometer (in.Hg):	29,943409	29,884348 75
Dry Bulb (F):	72,5	71,6
Humidity (%):	40,7	40,3
Air velocity (ft/min)	0	0

DGM #1st hour	Final:	2658,900	cuft	Final:	2658,900	cuft
	Initial:	2646,820	cuft	Initial:	2646,820	cuft
DGM #1	Final:	30515,759	cuft	Final:	864110,050	Liter
	Initial:	30442,164	cuft	Initial:	862026,880	Liter
DGM #2	Final:	21651,851	cuft	Final:	613112,130	Liter
	Initial:	21574,040	cuft	Initial:	610908,760	Liter
DGM room	Final:	16746,630	cuft	Final:	474211,750	Liter
	Initial:	16696,531	cuft	Initial:	472793,100	Liter

Numéro de la ligne dans "Raw data" à partir duquel les données du VRAI test commencent: 192

Autres données à rentrer: dans preload data, load data, traverse et filter set weight

Project nu.	PI 20294
Date	19-10-2023
Technicien	M.M

Preload data sheet

Test Load Weight:

Lower	Ideal	Upper
13,67	15,19	16,71

Load Volume: 0,3783 cu. ft

Loading Density: 7,575 lbs./ft3

Number of Spaces:

Spacer weight (lbs):

Load Density (wet): 43,457 lbs./ft3

Dry Wood Density: 35,956677

Piece Size (in): Thick	Wide	x Length	Weight lbs	Meter Moisture Content Dry Uncorrected %					Ave. MC x Weight	Volume Cubic Inches
1,5	3,5	17,5	2,31	21,9	21,8	21,8	21,8	21,7	50,358	91,88
1,5	3,5	17,5	2,29	22	21,9	21,6	21,6	21,7	49,8304	91,88
1,5	3,5	17,5	2,252	20,3	20,4	20,4	20,6	20,5	46,03088	91,88
1,5	3,5	12	2,266	20	20,3	20,4	20,4	20,5	46,04512	63,00
1,5	3,5	12	1,422	20,7	20,3	20,6	20,8	20,4	29,23632	63,00
1,5	3,5	12	1,554	20,6	20,5	20,5	20,5	20,4	31,857	63,00
1,5	3,5	12	1,41	20,8	20,7	20,8	20,7	20,9	29,2998	63,00
1,5	3,5	12	1,424	20,4	20,5	20,4	20,3	20,3	29,02112	63,00
1,5	3,5	12	1,51	20,6	20,7	20,7	20,6	20,8	31,2268	63,00
										0,00
										0,00
										0

FUEL LOAD DATA SHEET, CSA B415

Test Load Weight:

Lower	Ideal	Upper
13,7	15,2	16,7

* For boilers, a loading density factor of 10 lb/ft3 is applied

Load Volume: 0,41 cu. ft

Loading Density: 7,3 lbs./ft3

Number of Spaces: 16

Spacer weight: lbs

Load Density (wet): 34,5 lbs./ft3

Dry Wood Density: 28,6 lbs./ft3

Piece Size (in): Thick	Wide	Length	Weight lbs	Meter Moisture Content Dry Uncorrected %					Ave. MC x Weight	Volume Cubic Inches	Ave. MC %	
1,5	3,5	17,5	1,71	20,60	20,30	20,20	20,40	20,30	34,89704	91,88	20,4	Load
1,5	3,5	17,5	1,82	20,60	20,60	20,50	20,50	20,40	37,26432	91,88	20,5	
1,5	3,5	17,5	1,92	21,00	21,10	21,00	20,90	20,90	40,23964	91,88	21,0	
3,5	3,5	17,5	4,30	21,10	21,00	21,00	21,00	21,10	90,42992	214,38	21,0	
3,5	3,5	17,5	4,30	20,90	21,00	20,80	20,80	20,70	89,65368	214,38	20,8	
										0,00		
										0,00		
										0,00		
1,5	0,75	5	0,10			19,30			2,0072	5,63	19,3	spacers
1,5	0,75	5	0,13			19,60			2,6264	5,63	19,6	
1,5	0,75	5	0,14			19,40			2,7216	5,63	19,4	
1,5	0,75	5	0,11			19,30			2,1616	5,63	19,3	
1,5	0,75	5	0,10			19,60			2,0384	5,63	19,6	
1,5	0,75	5	0,11			19,30			2,1616	5,63	19,3	
1,5	0,75	5	0,11			19,60			2,156	5,63	19,6	
1,5	0,75	5	0,10			19,70			1,8912	5,63	19,7	
1,5	0,75	5	0,10			19,80			2,0196	5,63	19,8	
1,5	0,75	5	0,13			19,30			2,5862	5,63	19,3	
1,5	0,75	5	0,12			19,30			2,3388	5,63	19,3	
1,5	0,75	5	0,10			19,40			1,9012	5,63	19,4	
1,5	0,75	5	0,10			19,80			1,9404	5,63	19,8	
1,5	0,75	5	0,09			19,40			1,7848	5,63	19,4	
1,5	0,75	5	0,11			19,30			2,123	5,63	19,3	
1,5	0,75	5	0,13			19,30			2,5862	5,63	19,3	
										0,00		
										0,00		
										0,00		
										0,00		
										0,00		
										0,00		
										0,00		
										0,00		
										0,00		
										0,00		
										0,00		
										0,00		
										0,00		
										0,00		
								SUM MCx	327,3456		19,8 %	

Test Load Weight: 15,84 lbs.

Dry Weight: 5,95 kg.

Average Moisture Content: %

Dry: 20,67 Dry(EPA) 20,67 Dry(B415 20,67

20,67 Must be 19-25

Wet: 17,13 must be 15,2-22

Coal Bed Range: 3,2 lbs. to 4,0 lbs.

TEST CHARGE:

Coal bed weight: 3,4 lbs.

Project nu.	PI 20294
Date	19-10-2023
Technicien	M.M

Tunnel Traverse Worksheet (for velocity calculations)

Static Pressure: 0,18 in. H20
Barometer: 29,900 in. Hg

Pour un tunnel de 12" et plus, prendre 6 lectures

	TUNNEL VELOCITY	TUNNEL TEMP	SQUARE ROOT
	In. wc	°F	
A center			0,0000
B center			0,0000
A1			0,0000
A2			0,0000
A3			0,0000
A4			0,0000
A5			0,0000
A6			0,0000
B1			0,0000
B2			0,0000
B3			0,0000
B4			0,0000
B5			0,0000
B6			0,0000
AVERAGE	#DIV/0!	#DIV/0!	0,0000

PITOT CONSTANT=
0,947

Pour un tunnel moins de 12", prendre 4 lectures

	TUNNEL VELOCITY	TUNNEL TEMP	SQUARE ROOT
	In. wc	°F	
A center	0,078	78,22	0,2793
B center	0,077	78,11	0,2775
A1	0,063	78,22	0,2510
A2	0,073	78,16	0,2702
A3	0,074	78,16	0,2720
A4	0,063	78,14	0,2510
B1	0,062	78,1	0,2490
B2	0,073	78,0	0,2702
B3	0,071	78,0	0,2665
B4	0,063	78,0	0,2510
AVERAGE	0,0697	78,1160	0,2638

Project nu.	PI 20294
Date	19-10-2023
Technicien	M.M

Filter set weight

	System 1 (g) 1st hour			System 1 (g)			System 2 (g)			Ambient blank (g)	Date	Heure	Test end date & time
	probe	front/ Back	gasket	probe	front/ Back	gasket	probe	front/ Back	gasket	Filter			
Number	006	127-128	3	17	129-130	29	50	131-132	40	133			
Before (1)													
Before (2)													
Before (3)													
Before (4)													
Before (5)	61,3716	0,2440	34,3340	108,9413	0,2439	34,3095	107,6477	0,2433	34,2711	0,1220	2023-10-18	17:00	
Before (6)	61,3716	0,2440	34,3341	108,9414	0,2438	34,3096	107,6478	0,2434	34,2710	0,1221	2023-10-19	08:00	
After (1)	61,3723	0,2445	34,3367	108,9416	0,2468	34,3110	107,6477	0,2459	34,2733	0,1222	2023-10-19	16:45	
After (2)	61,3717	0,2442	34,3354	108,9415	0,2468	34,3099	107,6478	0,2459	34,2720	0,1222	2023-10-23	08:00	
After (3)	61,3717	0,2441	34,3354	108,9415	0,2468	34,3099	107,6478	0,2459	34,2720	0,1222	2023-10-24	08:00	2023-10-19 16:30
After (4)													
After (5)													
After (6)	61,3717	0,2441	34,3354	108,9415	0,2468	34,3099	107,6478	0,2459	34,2720	0,1222	2023-10-24	08:00	
Difference	0,0001	0,0001	0,0013	0,0001	0,0030	0,0003	0,0000	0,0025	0,0010	0,0001			
Total (mg)		1,5			3,4			3,5		0,1			
Total ajusté (mg)		**1,40**			**3,30**			**3,40**					

Project nu.	PI 20294
Date	19-10-2023
Technicien	M.M

Manufacturer: HEARTHSTONE
Model: 8024

Run: 7
Project #: PI 20294
Test Duration: 415 min

Note: In the "Input data", "Calc. % O_2", "Fuel Properties", and "Mass Balance" columns, [a], [c], [g], [k], [b], [c], [h], [u], [w], [j], and [k] refer to their respective variables in Clauses

Overall Heating Efficiency: 80,01%
Combustion Efficiency: 99,00%
Heat Transfer Efficiency: 80,82%

	HHV	LHV
Eff	80,01%	86,48%
Comb Eff	99,00%	99,00%
HT Eff	80,82%	87,35%
Output	13 615	kJ/h
Burn Rate	0,86	kg/h
Grams CO	110	g
Input	17 018	kJ/h
MC wet	17,13	

Ultimate CO_2
CO_{2ult} 19,64
f_o
1,063

Heat Output:	12 905	Btu/h
Heat Input:	16 143	Btu/h
Burn Duration:	6,93	h
Burn Rate:	1,89	lb/h
Stack Temp:	282,3	Deg. F

Elapsed Time	Weight Remaining (kg)	% CO [a]	% CO_2 [c]	Excess Air EA	Total O_2	Calc. % O_2 [g]	Flue Gas (ºC)	Room Temp (ºC)	Combust Eff %	Heat Transfer %	Net Eff %
	INPUT DATA			Oxygen Calculation			Input Data				
Averages		0,13	9,00	1,38	20,34	11,27	133,40	22,20	0,99	0,80	0,81
0,00	7,19	0,26	9,74	95,8%	20,28	10,39	130,7	22,2	97,9%	82,3%	80,0%
1,00	7,13	0,02	2,48	553,0%	20,74	18,00	136,7	22,2	87,3%	62,0%	54,2%
2,00	7,11	0,10	4,95	289,0%	20,61	15,61	151,7	22,1	99,3%	72,8%	72,3%
3,00	7,07	0,05	6,65	184,7%	20,48	13,61	165,8	22,1	100,0%	75,7%	75,7%
4,00	7,03	0,04	7,81	150,1%	20,42	12,59	175,0	22,3	100,0%	76,8%	76,8%
5,00	6,98	0,04	8,68	125,2%	20,38	11,65	172,9	22,3	100,0%	77,8%	77,8%
6,00	6,93	0,05	6,37	206,0%	20,52	14,12	149,9	22,3	100,0%	76,5%	76,5%
7,00	6,93	0,04	3,71	423,0%	20,69	16,90	139,8	22,0	100,4%	69,7%	70,0%
8,00	6,93	0,04	3,14	518,8%	20,73	17,57	133,2	22,2	100,7%	67,7%	68,1%
9,00	6,89	0,03	3,03	540,6%	20,74	17,69	128,8	22,2	100,8%	67,9%	68,4%
10,00	6,89	0,03	3,05	538,1%	20,74	17,67	125,4	22,3	100,8%	68,7%	69,2%
11,00	6,84	0,04	3,10	527,4%	20,73	17,62	123,1	22,2	100,7%	69,4%	69,9%
12,00	6,84	0,04	3,20	505,4%	20,73	17,50	121,2	22,2	100,7%	70,5%	70,9%
13,00	6,84	0,04	3,49	457,1%	20,71	17,20	119,4	22,2	100,6%	72,3%	72,7%
14,00	6,80	0,04	3,73	422,2%	20,69	16,95	118,4	22,1	100,5%	73,5%	73,8%
15,00	6,80	0,04	3,91	397,2%	20,68	16,75	117,6	22,1	100,4%	74,3%	74,6%
16,00	6,80	0,04	3,97	389,0%	20,68	16,69	116,8	22,2	100,4%	74,7%	75,0%
17,00	6,75	0,04	3,98	388,0%	20,67	16,67	116,9	22,2	100,3%	74,7%	74,9%
18,00	6,75	0,05	4,00	385,0%	20,67	16,65	116,4	22,2	100,3%	74,8%	75,0%
19,00	6,70	0,05	4,12	371,4%	20,66	16,52	116,4	22,2	100,2%	75,2%	75,3%
20,00	6,70	0,06	4,44	336,9%	20,64	16,19	117,1	22,2	100,0%	76,1%	76,1%
21,00	6,66	0,06	4,45	335,3%	20,64	16,16	117,8	22,2	100,0%	76,0%	76,0%
22,00	6,66	0,06	4,08	374,6%	20,67	16,56	118,0	22,2	100,0%	74,9%	74,9%
23,00	6,61	0,06	3,94	391,0%	20,68	16,71	118,0	22,1	100,0%	74,3%	74,3%
24,00	6,61	0,06	3,91	394,0%	20,68	16,74	117,3	22,0	100,0%	74,3%	74,3%
25,00	6,61	0,06	4,01	381,6%	20,67	16,62	117,4	22,0	99,9%	74,7%	74,6%
26,00	6,57	0,07	4,12	368,1%	20,66	16,51	117,7	22,0	99,8%	75,0%	74,9%
27,00	6,57	0,07	4,23	357,4%	20,66	16,40	118,0	22,0	99,8%	75,3%	75,1%
28,00	6,52	0,07	4,35	343,0%	20,65	16,26	118,1	22,1	99,7%	75,7%	75,5%
29,00	6,52	0,07	4,46	333,1%	20,64	16,14	118,5	22,2	99,7%	76,0%	75,7%
30,00	6,48	0,07	4,55	324,0%	20,63	16,04	119,2	22,1	99,7%	76,1%	75,8%
31,00	6,48	0,07	4,64	317,0%	20,63	15,96	119,7	22,2	99,7%	76,3%	76,0%
32,00	6,48	0,08	4,74	307,2%	20,62	15,86	120,0	22,1	99,5%	76,6%	76,1%
33,00	6,45	0,08	4,86	297,2%	20,61	15,71	119,5	22,2	99,5%	76,9%	76,5%
34,00	6,39	0,09	5,01	285,0%	20,60	15,55	119,5	22,2	99,5%	77,2%	76,8%
35,00	6,39	0,09	5,17	273,4%	20,58	15,38	119,5	22,2	99,4%	77,6%	77,1%
36,00	6,39	0,09	5,30	264,1%	20,58	15,24	119,3	22,2	99,4%	77,9%	77,4%
37,00	6,34	0,09	5,43	255,3%	20,57	15,09	119,7	22,1	99,3%	78,1%	77,6%
38,00	6,34	0,10	5,50	251,0%	20,57	15,02	120,2	22,0	99,3%	78,1%	77,6%
39,00	6,30	0,09	5,55	248,0%	20,57	14,97	120,8	22,0	99,4%	78,2%	77,6%
40,00	6,30	0,10	5,73	237,1%	20,56	14,78	121,6	22,0	99,4%	78,4%	77,9%
41,00	6,25	0,09	6,95	178,7%	20,47	13,47	123,0	22,0	99,5%	80,1%	79,6%
42,00	6,21	0,10	8,08	139,9%	20,40	12,26	125,3	22,0	99,4%	81,1%	80,6%
43,00	6,21	0,10	8,58	126,3%	20,37	11,74	127,6	22,1	99,4%	81,3%	80,8%
44,00	6,16	0,10	8,72	122,9%	20,36	11,58	129,7	22,1	99,4%	81,3%	80,8%
45,00	6,11	0,10	8,62	127,0%	20,37	11,80	131,1	22,1	99,4%	81,0%	80,5%
46,00	6,07	0,09	8,59	126,2%	20,37	11,73	132,6	22,0	99,5%	80,9%	80,5%
47,00	6,03	0,10	8,42	130,0%	20,38	11,91	133,5	22,1	99,5%	80,7%	80,3%
48,00	6,02	0,09	8,42	130,0%	20,38	11,91	134,3	22,1	99,5%	80,7%	80,3%
49,00	5,98	0,09	8,21	133,9%	20,39	12,03	134,6	22,1	99,5%	80,6%	80,1%
50,00	5,98	0,08	7,92	145,7%	20,41	12,46	134,7	22,1	99,6%	80,1%	79,8%
51,00	5,93	0,08	7,95	144,7%	20,41	12,42	134,3	22,1	99,6%	80,2%	79,9%
52,00	5,89	0,08	8,00	143,2%	20,41	12,37	133,6	22,1	99,6%	80,3%	80,0%
53,00	5,89	0,08	8,11	139,7%	20,40	12,24	134,2	22,1	99,6%	80,4%	80,0%
54,00	5,84	0,08	8,18	137,8%	20,39	12,18	134,2	22,1	99,6%	80,4%	80,1%
55,00	5,80	0,09	8,33	133,4%	20,38	12,01	134,5	22,1	99,5%	80,5%	80,2%
56,00	5,80	0,10	8,57	126,5%	20,37	11,74	135,1	22,1	99,4%	80,7%	80,3%
57,00	5,75	0,11	8,74	122,0%	20,36	11,56	136,2	22,1	99,4%	80,8%	80,3%
58,00	5,71	0,11	8,86	119,1%	20,35	11,44	137,6	22,2	99,3%	80,9%	80,3%
59,00	5,66	0,11	8,93	117,3%	20,34	11,36	137,6	22,1	99,4%	80,8%	80,3%
60,00	5,66	0,10	8,69	123,5%	20,36	11,62	137,9	22,1	99,5%	80,6%	80,2%
61,00	5,62	0,09	8,60	125,9%	20,37	11,72	137,9	22,1	99,5%	80,5%	80,1%
62,00	5,57	0,10	8,55	127,0%	20,37	11,77	138,1	22,1	99,4%	80,5%	80,0%
63,00	5,53	0,09	8,70	123,4%	20,36	11,61	137,9	22,1	99,5%	80,6%	80,2%
64,00	5,53	0,10	8,87	119,1%	20,35	11,43	138,6	22,1	99,5%	80,7%	80,3%
65,00	5,48	0,10	8,97	116,6%	20,34	11,32	138,8	22,2	99,4%	80,9%	80,3%
66,00	5,43	0,10	9,20	111,1%	20,33	11,07	139,6	22,2	99,4%	80,9%	80,3%
67,00	5,43	0,10	10,49	85,4%	20,26	9,70	141,0	22,2	99,5%	81,8%	81,3%
68,00	5,39	0,10	10,72	81,4%	20,23	9,45	143,5	22,2	99,5%	81,8%	81,3%
69,00	5,34	0,09	11,45	70,2%	20,18	8,66	146,3	22,1	99,5%	82,0%	81,6%
70,00	5,27	0,08	12,50	56,1%	20,11	7,57	147,7	22,1	99,6%	82,5%	82,2%
71,00	5,25	0,08	12,62	54,6%	20,10	7,45	148,6	22,2	99,6%	82,5%	82,2%
72,00	5,21	0,08	13,33	46,2%	20,05	6,68	149,9	22,2	99,7%	82,7%	82,5%
73,00	5,16	0,08	12,98	50,7%	20,08	7,07	150,3	22,2	99,6%	82,6%	82,4%
74,00	5,12	0,08	12,54	56,1%	20,11	7,50	150,3	22,1	99,6%	82,3%	82,2%
75,00	5,07	0,05	11,30	73,1%	20,19	8,86	148,9	22,2	99,8%	81,8%	81,7%
76,00	5,03	0,11	10,16	91,2%	20,26	10,06	149,8	22,3	99,4%	80,9%	80,4%
77,00	5,02	0,17	9,79	97,4%	20,28	10,42	152,4	22,2	98,9%	80,4%	79,5%
78,00	4,98	0,18	9,70	98,8%	20,29	10,50	154,0	22,2	98,7%	80,2%	79,2%
79,00	4,94	0,20	9,93	93,9%	20,27	10,24	155,9	22,3	98,7%	80,3%	79,2%
80,00	4,94	0,21	10,16	89,5%	20,26	9,99	157,5	22,3	98,6%	80,4%	79,2%
81,00	4,89	0,22	10,46	84,0%	20,23	9,67	159,0	22,3	98,5%	80,4%	79,3%
82,00	4,84	0,23	10,82	77,7%	20,21	9,27	160,8	22,2	98,5%	80,6%	79,4%
83,00	4,80	0,24	11,10	73,0%	20,19	8,96	161,8	22,2	98,4%	80,8%	79,5%
84,00	4,80	0,23	11,20	70,8%	20,18	8,78	163,1	22,3	98,5%	80,6%	79,6%
85,00	4,75	0,25	11,48	67,4%	20,17	8,56	164,5	22,3	98,4%	80,6%	79,5%
86,00	4,71	0,26	11,55	66,4%	20,16	8,49	165,5	22,3	98,4%	80,6%	79,5%
87,00	4,66	0,26	11,59	65,9%	20,16	8,45	166,4	22,3	98,4%	80,6%	79,4%
88,00	4,62	0,26	11,61	65,4%	20,16	8,41	167,6	22,3	98,4%	80,7%	79,4%
89,00	4,62	0,26	11,63	65,3%	20,16	8,40	168,5	22,3	98,4%	80,7%	79,3%
90,00	4,57	0,26	11,63	65,3%	20,16	8,40	169,0	22,3	98,4%	80,6%	79,3%
91,00	4,53	0,26	11,69	64,3%	20,15	8,33	170,0	22,3	98,4%	80,6%	79,3%
92,00	4,48	0,26	11,70	63,2%	20,15	8,24	170,4	22,3	98,4%	80,6%	79,3%

93,00	4,48	0,26	11,80	62,9%	20,14	8,22	170,8	22,3	99,3%	80,6%	79,3%
94,00	4,43	0,26	11,74	63,6%	20,15	8,27	171,9	22,3	99,3%	80,5%	79,2%
95,00	4,39	0,26	11,69	64,4%	20,15	8,33	172,0	22,4	99,4%	80,5%	79,2%
96,00	4,35	0,24	11,70	64,0%	20,15	8,33	173,7	22,3	99,3%	80,4%	79,2%
97,00	4,35	0,24	11,92	61,3%	20,14	8,09	173,7	22,4	99,5%	80,5%	79,3%
98,00	4,29	0,22	12,10	59,4%	20,13	7,91	171,9	22,3	99,6%	80,8%	79,7%
99,00	4,25	0,18	12,09	60,1%	20,13	7,95	172,8	22,2	99,9%	80,7%	79,9%
100,00	4,21	0,16	12,12	59,9%	20,13	7,93	171,5	22,4	99,1%	80,9%	80,1%
101,00	4,16	0,19	12,15	59,2%	20,13	7,88	173,4	22,4	99,9%	80,8%	79,9%
102,00	4,16	0,16	12,37	56,7%	20,11	7,68	171,5	22,4	99,1%	81,0%	80,2%
103,00	4,12	0,17	12,37	56,7%	20,11	7,68	171,0	22,4	99,1%	81,0%	80,2%
104,00	4,07	0,13	12,52	55,3%	20,10	7,52	170,5	22,4	99,3%	81,1%	80,6%
105,00	4,03	0,07	12,39	57,7%	20,12	7,70	168,1	22,3	99,7%	81,2%	81,0%
106,00	3,98	0,08	12,40	57,8%	20,12	7,68	165,6	22,3	99,8%	81,4%	81,2%
107,00	3,94	0,08	12,57	55,5%	20,11	7,51	164,1	22,4	99,9%	81,6%	81,4%
108,00	3,94	0,08	12,58	55,3%	20,11	7,49	163,3	22,4	99,7%	81,6%	81,4%
109,00	3,85	0,07	12,88	51,7%	20,09	7,17	162,1	22,3	99,7%	81,8%	81,6%
110,00	3,85	0,07	13,23	47,7%	20,06	6,80	161,2	22,4	99,7%	82,1%	81,9%
111,00	3,80	0,10	13,46	44,9%	20,04	6,54	161,1	22,4	99,5%	82,2%	81,7%
112,00	3,76	0,08	13,34	46,3%	20,05	6,67	160,3	22,5	99,6%	82,2%	81,9%
113,00	3,71	0,08	13,10	48,4%	20,07	6,87	159,1	22,4	99,7%	82,1%	81,9%
114,00	3,66	0,08	13,08	49,2%	20,07	6,95	158,5	22,4	99,8%	82,2%	82,0%
115,00	3,63	0,05	12,80	52,9%	20,09	7,27	157,1	22,5	99,9%	82,1%	82,0%
116,00	3,62	0,04	12,42	57,6%	20,12	7,68	155,7	22,5	99,9%	82,0%	81,9%
117,00	3,57	0,03	12,24	60,0%	20,13	7,87	154,7	22,5	99,9%	82,0%	81,9%
118,00	3,53	0,04	11,91	64,4%	20,15	8,22	153,6	22,6	99,9%	81,9%	81,8%
119,00	3,48	0,04	11,63	68,4%	20,17	8,52	152,0	22,4	99,9%	81,8%	81,7%
120,00	3,48	0,04	11,45	70,9%	20,18	8,71	150,9	22,4	99,9%	81,7%	81,7%
121,00	3,44	0,04	11,25	73,9%	20,19	8,92	149,6	22,4	99,9%	81,7%	81,7%
122,00	3,44	0,04	11,23	74,3%	20,20	8,95	149,1	22,4	99,9%	81,7%	81,6%
123,00	3,39	0,08	10,81	80,4%	20,22	9,37	148,0	22,4	99,6%	81,8%	81,2%
124,00	3,35	0,20	11,45	68,5%	20,17	8,62	150,8	22,4	99,7%	81,7%	80,6%
125,00	3,35	0,34	11,68	64,6%	20,15	8,35	153,8	22,3	99,5%	81,6%	80,4%
126,00	3,30	0,25	11,79	63,0%	20,14	8,22	156,5	22,3	99,4%	81,5%	80,2%
127,00	3,26	0,26	11,95	60,8%	20,13	8,05	158,1	22,3	99,4%	81,5%	80,2%
128,00	3,21	0,27	12,16	58,1%	20,12	7,83	159,9	22,3	99,3%	81,5%	80,2%
129,00	3,21	0,28	12,39	55,0%	20,10	7,57	161,5	22,3	99,3%	81,5%	80,2%
130,00	3,16	0,29	12,57	52,8%	20,09	7,38	163,2	22,3	99,3%	81,5%	80,1%
131,00	3,12	0,29	12,70	51,2%	20,08	7,15	164,5	22,3	99,3%	81,6%	80,1%
132,00	3,12	0,30	12,90	48,9%	20,07	7,02	166,0	22,3	99,2%	81,5%	80,1%
133,00	3,07	0,30	12,95	48,3%	20,07	6,97	167,0	22,3	99,2%	81,5%	80,1%
134,00	3,03	0,30	13,03	47,3%	20,06	6,88	168,4	22,3	99,2%	81,5%	80,0%
135,00	3,01	0,30	13,03	47,2%	20,06	6,88	169,4	22,3	99,2%	81,4%	79,9%
136,00	2,94	0,30	13,03	47,3%	20,06	6,88	170,0	22,3	99,2%	81,4%	79,9%
137,00	2,94	0,30	13,01	47,5%	20,06	6,90	170,0	22,4	99,2%	81,4%	79,9%
138,00	2,94	0,30	13,05	47,2%	20,06	6,85	170,5	22,8	99,2%	81,4%	80,2%
139,00	2,89	0,29	12,92	48,7%	20,07	7,00	169,9	22,1	99,3%	81,4%	80,2%
140,00	2,85	0,29	12,86	49,3%	20,07	7,06	170,4	22,2	99,3%	81,3%	79,9%
141,00	2,80	0,29	12,88	49,1%	20,07	7,04	170,7	22,2	99,3%	81,3%	79,9%
142,00	2,76	0,29	12,85	49,3%	20,07	7,08	170,6	22,1	99,3%	81,3%	79,9%
143,00	2,76	0,29	12,88	49,1%	20,07	7,04	170,9	22,0	99,3%	81,3%	79,9%
144,00	2,71	0,29	12,94	48,5%	20,07	6,99	170,8	22,8	99,3%	81,3%	79,9%
145,00	2,71	0,29	12,95	48,4%	20,07	6,97	171,3	22,7	99,3%	81,3%	79,9%
146,00	2,67	0,29	12,98	48,2%	20,06	6,96	171,7	22,7	99,3%	81,3%	79,9%
147,00	2,62	0,29	13,05	47,3%	20,06	6,87	172,3	22,7	99,3%	81,3%	79,9%
148,00	2,62	0,30	13,16	45,9%	20,05	6,74	172,8	22,6	99,3%	81,3%	79,9%
149,00	2,57	0,30	13,21	45,4%	20,05	6,69	173,1	22,6	99,3%	81,3%	79,9%
150,00	2,53	0,30	13,21	45,4%	20,05	6,68	173,2	22,6	99,3%	81,3%	79,9%
151,00	2,51	0,30	13,31	44,3%	20,04	6,58	173,3	22,6	99,3%	81,3%	79,9%
152,00	2,48	0,31	13,50	41,3%	20,02	6,29	173,9	22,5	99,3%	81,4%	80,0%
153,00	2,44	0,32	13,66	40,5%	20,02	6,20	174,4	22,6	99,2%	81,4%	80,0%
154,00	2,39	0,31	13,45	42,7%	20,03	6,42	174,7	22,5	99,2%	81,3%	79,9%
155,00	2,37	0,30	13,38	43,6%	20,04	6,51	174,6	22,5	99,3%	81,3%	79,9%
156,00	2,35	0,30	13,39	43,4%	20,04	6,49	175,1	22,6	99,3%	81,3%	79,9%
157,00	2,30	0,31	13,50	41,6%	20,02	6,31	174,8	22,6	99,2%	81,4%	79,9%
158,00	2,30	0,31	13,61	41,1%	20,02	6,25	174,6	22,6	99,2%	81,4%	80,2%
159,00	2,26	0,32	13,74	39,7%	20,01	6,11	175,2	22,5	99,2%	81,4%	80,0%
160,00	2,21	0,32	13,77	39,4%	20,01	6,08	175,8	22,5	99,2%	81,4%	79,9%
161,00	2,21	0,33	13,77	39,3%	20,01	6,07	175,8	22,5	99,2%	81,4%	79,9%
162,00	2,17	0,32	13,60	40,5%	20,02	6,20	175,9	22,6	99,2%	81,4%	79,9%
163,00	2,12	0,32	13,50	41,7%	20,02	6,28	176,4	22,5	99,2%	81,3%	79,9%
164,00	2,12	0,32	13,54	41,7%	20,02	6,32	176,3	22,6	99,2%	81,3%	79,8%
165,00	2,08	0,31	13,49	42,3%	20,03	6,38	176,2	22,6	99,2%	81,3%	79,8%
166,00	2,08	0,31	13,54	41,8%	20,03	6,33	176,2	22,6	99,2%	81,3%	79,8%
167,00	2,03	0,32	13,66	40,5%	20,02	6,20	176,3	22,6	99,2%	81,3%	79,9%
168,00	1,98	0,33	13,87	38,3%	20,00	5,97	176,7	22,6	99,1%	81,4%	79,9%
169,00	1,94	0,35	14,02	35,7%	19,99	5,80	176,8	22,6	99,1%	81,3%	79,9%
170,00	1,93	0,38	13,99	35,7%	19,99	5,81	177,1	22,7	97,9%	81,4%	79,7%
171,00	1,89	0,42	14,00	36,2%	19,98	5,78	177,3	22,6	97,7%	81,4%	79,5%
172,00	1,85	0,50	14,10	34,5%	19,98	5,62	177,1	22,7	97,2%	81,3%	79,2%
173,00	1,84	0,60	14,16	33,1%	19,97	5,51	177,2	22,6	96,7%	81,4%	78,7%
174,00	1,78	0,65	14,09	33,3%	19,97	5,55	177,2	22,7	96,4%	81,4%	78,5%
175,00	1,80	0,61	14,02	34,3%	19,97	5,65	177,2	22,7	96,6%	81,4%	78,6%
176,00	1,76	0,50	13,85	35,9%	19,98	5,89	177,0	22,7	97,2%	81,4%	79,1%
177,00	1,71	0,44	14,19	34,3%	19,97	5,57	176,9	22,7	97,5%	81,5%	79,5%
178,00	1,68	0,06	13,19	48,2%	20,06	6,84	173,5	22,7	99,8%	81,4%	81,2%
179,00	1,67	0,03	12,75	53,7%	20,10	7,33	169,6	22,7	100,0%	81,4%	81,4%
180,00	1,67	0,02	12,48	57,4%	20,12	7,65	166,2	22,7	100,0%	81,4%	81,4%
181,00	1,62	0,02	12,41	58,0%	20,12	7,70	162,9	22,7	100,0%	81,6%	81,6%
182,00	1,59	0,03	12,24	60,1%	20,13	7,88	160,1	22,7	100,0%	81,7%	81,7%
183,00	1,58	0,02	12,25	60,0%	20,13	7,86	157,5	22,7	100,0%	81,9%	81,8%
184,00	1,58	0,03	12,10	61,9%	20,14	8,02	154,7	22,7	100,0%	81,9%	81,9%
185,00	1,53	0,04	12,12	61,3%	20,14	7,99	152,3	22,7	99,9%	82,1%	82,0%
186,00	1,53	0,04	11,89	64,6%	20,15	8,24	150,1	22,7	99,9%	82,1%	82,0%
187,00	1,53	0,04	11,38	71,9%	20,19	8,76	148,2	22,8	99,9%	81,9%	81,8%
188,00	1,49	0,05	11,05	77,0%	20,21	9,13	146,1	22,7	99,9%	81,6%	81,6%
189,00	1,49	0,05	10,00	93,2%	20,28	10,24	144,0	22,8	99,9%	81,3%	81,1%
190,00	1,49	0,06	9,56	104,1%	20,30	10,71	141,9	22,8	99,8%	81,1%	80,9%
191,00	1,49	0,06	9,44	106,7%	20,31	10,84	140,1	22,8	99,8%	81,1%	81,0%
192,00	1,44	0,06	9,39	107,8%	20,32	10,90	138,2	22,8	99,8%	81,2%	81,1%
193,00	1,44	0,06	9,34	109,0%	20,32	10,95	136,2	22,8	99,8%	81,4%	81,2%
194,00	1,44	0,06	9,29	110,0%	20,32	11,00	134,3	22,8	99,8%	81,5%	81,3%
195,00	1,39	0,06	9,26	110,8%	20,32	11,04	132,7	22,8	99,8%	81,6%	81,4%
196,00	1,39	0,06	9,22	111,5%	20,33	11,07	131,5	22,8	99,8%	81,6%	81,4%
197,00	1,39	0,06	9,21	111,9%	20,33	11,09	129,8	22,8	99,8%	81,7%	81,5%
198,00	1,39	0,06	9,18	112,6%	20,33	11,12	128,2	22,8	99,8%	81,8%	81,7%
199,00	1,35	0,07	9,20	111,9%	20,33	11,09	127,3	22,8	99,8%	81,9%	81,7%
200,00	1,39	0,07	9,16	113,0%	20,33	11,14	126,0	22,8	99,7%	82,0%	81,8%
201,00	1,35	0,07	9,21	111,7%	20,33	11,08	124,7	22,8	99,7%	82,1%	81,9%
202,00	1,35	0,07	9,27	110,2%	20,32	11,01	123,4	22,8	99,7%	82,2%	82,0%
203,00	1,35	0,07	9,14	113,4%	20,33	11,16	122,5	22,8	99,7%	82,2%	82,0%
204,00	1,30	0,07	9,13	113,6%	20,33	11,17	121,4	22,8	99,7%	82,3%	82,1%
205,00	1,30	0,07	9,12	113,8%	20,33	11,17	120,2	22,8	99,7%	82,4%	82,2%
206,00	1,30	0,07	9,16	112,7%	20,33	11,13	118,5	22,8	99,7%	82,5%	82,3%

207,20	1,30	0,07	9,11	113,9%	20,33	11,19	118,6	22,8	99,7%	82,0%	82,3%
208,20	1,30	0,08	9,11	113,9%	20,33	11,19	117,9	22,9	99,7%	82,0%	82,3%
209,20	1,26	0,08	9,12	113,5%	20,33	11,17	117,1	22,9	99,7%	82,0%	82,4%
210,20	1,30	0,08	9,08	115,0%	20,34	11,24	116,8	22,8	99,8%	82,0%	82,3%
211,20	1,26	0,08	9,03	115,8%	20,34	11,27	116,3	22,8	99,8%	82,0%	82,3%
212,20	1,26	0,08	8,98	117,3%	20,34	11,34	115,8	22,8	99,8%	82,0%	82,3%
213,20	1,26	0,08	8,91	118,5%	20,35	11,40	115,0	22,8	99,8%	82,7%	82,3%
214,20	1,21	0,08	8,88	119,3%	20,35	11,43	114,4	22,9	99,8%	82,7%	82,3%
215,20	1,23	0,08	8,83	120,4%	20,35	11,48	113,9	22,8	99,8%	82,7%	82,3%
216,20	1,21	0,08	8,75	122,1%	20,36	11,55	113,4	22,9	99,8%	82,7%	82,3%
217,20	1,21	0,08	8,75	122,1%	20,36	11,55	113,0	22,9	99,8%	82,7%	82,4%
218,20	1,21	0,08	8,73	122,9%	20,36	11,59	112,5	22,9	99,8%	82,7%	82,4%
219,20	1,21	0,08	8,75	122,5%	20,36	11,57	112,0	22,9	99,8%	82,8%	82,4%
220,20	1,21	0,08	8,75	122,5%	20,36	11,57	111,8	23,0	99,8%	82,8%	82,5%
221,20	1,17	0,08	8,80	121,2%	20,35	11,52	110,8	22,9	99,8%	82,9%	82,6%
222,20	1,17	0,08	8,75	122,1%	20,35	11,55	110,2	23,0	99,8%	82,9%	82,6%
223,20	1,17	0,08	8,80	121,1%	20,35	11,51	109,7	23,0	99,8%	83,0%	82,7%
224,20	1,17	0,09	8,80	121,1%	20,35	11,51	109,3	23,0	99,8%	83,0%	82,7%
225,20	1,17	0,09	8,78	121,4%	20,35	11,53	109,1	23,0	99,9%	83,0%	82,7%
226,20	1,16	0,09	8,78	121,0%	20,35	11,52	109,0	22,9	99,8%	83,0%	82,7%
227,20	1,17	0,09	8,81	120,6%	20,35	11,49	108,6	23,0	99,9%	83,1%	82,7%
228,20	1,12	0,09	8,78	121,4%	20,35	11,53	107,8	23,0	99,9%	83,1%	82,7%
229,20	1,14	0,09	8,70	123,4%	20,36	11,61	107,3	23,0	99,9%	83,1%	82,7%
230,20	1,12	0,09	8,83	120,2%	20,35	11,47	107,0	23,0	99,9%	83,2%	82,8%
231,20	1,12	0,09	8,90	118,8%	20,35	11,40	106,9	23,1	99,8%	83,2%	82,8%
232,20	1,12	0,10	8,93	117,8%	20,34	11,35	107,0	23,0	99,9%	83,3%	82,9%
233,20	1,12	0,10	8,93	117,8%	20,34	11,35	106,8	22,8	99,9%	83,3%	82,9%
234,20	1,12	0,10	8,87	119,2%	20,35	11,43	106,9	22,8	99,9%	83,2%	82,8%
235,20	1,08	0,09	8,80	120,9%	20,35	11,51	106,8	22,4	99,8%	83,2%	82,7%
236,20	1,08	0,07	8,35	133,3%	20,38	12,00	106,1	22,3	99,7%	82,9%	82,7%
237,20	1,08	0,07	8,27	135,0%	20,39	12,08	105,4	22,3	99,7%	82,9%	82,7%
238,20	1,08	0,07	8,22	137,1%	20,39	12,14	104,5	22,3	99,7%	83,0%	82,7%
239,20	1,04	0,07	8,20	137,4%	20,39	12,15	103,7	22,4	99,7%	83,0%	82,8%
240,20	1,08	0,07	8,22	136,9%	20,39	12,13	102,9	22,5	99,7%	83,1%	82,9%
241,20	1,03	0,07	8,20	137,4%	20,39	12,16	102,4	22,5	99,7%	83,2%	82,9%
242,20	1,03	0,07	8,20	137,5%	20,39	12,16	101,8	22,6	99,7%	83,2%	83,0%
243,20	1,03	0,07	8,24	136,3%	20,39	12,12	101,1	22,6	99,7%	83,3%	83,1%
244,20	1,03	0,07	8,27	135,6%	20,39	12,09	100,3	22,6	99,7%	83,4%	83,1%
245,20	1,03	0,07	8,28	135,1%	20,39	12,07	99,7	22,7	99,7%	83,5%	83,2%
246,20	1,03	0,07	8,27	135,6%	20,39	12,09	99,2	22,7	99,7%	83,5%	83,2%
247,20	1,03	0,07	8,23	136,8%	20,39	12,12	98,9	22,8	99,7%	83,5%	83,2%
248,20	1,03	0,07	8,23	136,6%	20,39	12,13	98,4	22,7	99,7%	83,5%	83,3%
249,20	0,99	0,07	8,22	136,9%	20,39	12,14	98,2	22,8	99,7%	83,5%	83,3%
250,20	0,99	0,07	8,23	136,6%	20,39	12,12	97,9	22,8	99,7%	83,6%	83,3%
251,20	0,99	0,07	8,23	136,5%	20,39	12,12	97,4	22,9	99,7%	83,6%	83,4%
252,20	0,99	0,07	8,27	135,4%	20,39	12,08	97,2	22,9	99,7%	83,7%	83,4%
253,20	0,94	0,07	8,27	135,5%	20,39	12,09	96,6	22,9	99,7%	83,7%	83,4%
254,20	0,94	0,07	8,26	135,6%	20,39	12,09	96,4	22,9	99,7%	83,7%	83,5%
255,20	0,94	0,07	8,24	136,4%	20,39	12,12	96,2	22,8	99,7%	83,7%	83,5%
256,20	0,94	0,07	8,22	136,9%	20,39	12,14	96,0	22,9	99,7%	83,7%	83,4%
257,20	0,94	0,07	8,22	136,8%	20,39	12,13	95,7	23,0	99,7%	83,8%	83,5%
258,20	0,94	0,07	8,24	136,3%	20,39	12,12	95,4	23,0	99,7%	83,8%	83,5%
259,20	0,94	0,07	8,24	136,2%	20,39	12,11	95,1	22,9	99,7%	83,8%	83,5%
260,20	0,94	0,07	8,22	136,7%	20,39	12,13	95,0	23,0	99,7%	83,8%	83,5%
261,20	0,90	0,08	8,22	136,7%	20,39	12,13	94,8	22,9	99,8%	83,8%	83,5%
262,20	0,90	0,08	8,22	136,9%	20,39	12,14	94,3	23,0	99,7%	83,9%	83,6%
263,20	0,90	0,08	8,20	137,2%	20,39	12,15	94,3	23,0	99,8%	83,9%	83,6%
264,20	0,90	0,08	8,22	136,8%	20,39	12,14	94,2	23,0	99,8%	83,9%	83,6%
265,20	0,90	0,08	8,22	136,8%	20,39	12,13	93,9	23,0	99,8%	83,9%	83,6%
266,20	0,90	0,08	8,23	136,3%	20,39	12,12	93,6	23,0	99,8%	83,9%	83,6%
267,20	0,90	0,08	8,29	134,8%	20,39	12,06	93,4	23,1	99,8%	84,0%	83,7%
268,20	0,90	0,08	8,24	136,1%	20,39	12,11	93,4	23,0	99,8%	84,0%	83,6%
269,20	0,85	0,08	8,21	137,0%	20,39	12,15	93,3	23,1	99,8%	84,0%	83,6%
270,20	0,90	0,08	8,22	136,5%	20,39	12,13	93,0	23,1	99,8%	84,0%	83,6%
271,20	0,85	0,08	8,24	136,0%	20,39	12,11	93,0	23,1	99,8%	84,0%	83,6%
272,20	0,85	0,08	8,23	136,4%	20,39	12,12	92,9	23,0	99,8%	84,0%	83,6%
273,20	0,85	0,08	8,23	136,2%	20,39	12,12	93,0	23,1	99,8%	84,0%	83,6%
274,20	0,85	0,08	8,25	135,8%	20,39	12,09	93,0	23,1	99,8%	84,0%	83,6%
275,20	0,85	0,09	8,25	135,5%	20,39	12,09	92,8	23,1	99,8%	84,0%	83,7%
276,20	0,85	0,09	8,22	136,0%	20,39	12,11	92,5	23,2	99,5%	84,0%	83,7%
277,20	0,85	0,09	8,24	136,0%	20,39	12,11	92,5	23,2	99,5%	84,1%	83,7%
278,20	0,80	0,09	8,25	135,4%	20,39	12,09	92,2	23,2	99,5%	84,1%	83,7%
279,20	0,80	0,09	8,11	139,4%	20,40	12,24	92,4	23,2	99,5%	84,0%	83,8%
280,20	0,80	0,10	8,05	141,1%	20,40	12,30	92,4	23,2	99,4%	83,9%	83,8%
281,20	0,80	0,10	8,06	139,9%	20,40	12,26	92,5	23,3	99,4%	84,0%	83,5%
282,20	0,76	0,10	8,03	141,8%	20,40	12,33	92,3	23,3	99,4%	83,9%	83,4%
283,20	0,75	0,10	8,04	141,2%	20,40	12,31	92,2	23,2	99,4%	83,9%	83,4%
284,20	0,79	0,10	8,04	141,2%	20,40	12,31	92,1	23,2	99,4%	84,0%	83,4%
285,20	0,76	0,10	8,04	141,3%	20,40	12,31	92,3	23,2	99,4%	83,9%	83,4%
286,20	0,76	0,10	8,04	141,3%	20,40	12,31	92,0	23,2	99,4%	84,0%	83,4%
287,20	0,76	0,10	7,95	144,1%	20,41	12,41	92,4	23,3	99,4%	83,9%	83,4%
288,20	0,76	0,09	7,97	143,7%	20,41	12,39	92,1	23,3	99,5%	83,9%	83,5%
289,20	0,76	0,09	7,94	144,7%	20,41	12,43	91,7	23,1	99,5%	83,9%	83,5%
290,20	0,76	0,09	7,90	146,0%	20,41	12,47	91,5	23,3	99,5%	83,9%	83,5%
291,20	0,71	0,09	7,88	146,5%	20,41	12,49	90,9	23,3	99,5%	84,0%	83,5%
292,20	0,76	0,09	7,86	146,9%	20,41	12,51	91,2	23,2	99,5%	83,9%	83,5%
293,20	0,71	0,10	7,81	148,4%	20,42	12,56	91,2	23,3	99,4%	83,9%	83,4%
294,20	0,71	0,10	7,83	147,7%	20,42	12,54	91,3	23,2	99,4%	83,9%	83,4%
295,20	0,71	0,10	7,85	147,1%	20,42	12,52	91,2	23,3	99,4%	83,9%	83,4%
296,20	0,71	0,10	7,83	147,6%	20,42	12,53	91,3	23,2	99,4%	83,9%	83,4%
297,20	0,71	0,10	7,85	147,1%	20,42	12,52	91,4	23,3	99,4%	83,9%	83,4%
298,20	0,71	0,10	7,88	146,1%	20,41	12,48	91,2	23,2	99,5%	83,9%	83,4%
299,20	0,71	0,10	7,91	145,0%	20,41	12,45	91,2	23,2	99,4%	83,9%	83,4%
300,20	0,71	0,10	7,95	144,0%	20,41	12,41	91,2	23,1	99,4%	84,0%	83,4%
301,20	0,67	0,10	7,95	144,1%	20,41	12,41	91,1	23,2	99,4%	84,0%	83,5%
302,20	0,67	0,10	7,92	144,9%	20,41	12,44	91,1	23,2	99,4%	84,0%	83,4%
303,20	0,67	0,10	7,96	143,5%	20,41	12,39	91,0	23,2	99,4%	84,0%	83,5%
304,20	0,67	0,10	7,96	143,7%	20,41	12,40	91,0	23,3	99,4%	84,0%	83,5%
305,20	0,67	0,10	7,95	144,0%	20,41	12,41	91,0	23,2	99,4%	84,0%	83,5%
306,20	0,67	0,10	7,99	142,8%	20,41	12,36	90,9	23,1	99,4%	84,0%	83,5%
307,20	0,67	0,11	7,98	142,8%	20,41	12,37	91,0	23,1	99,3%	84,0%	83,4%
308,20	0,63	0,11	8,01	141,7%	20,40	12,33	90,9	23,3	99,3%	84,0%	83,4%
309,20	0,62	0,11	8,03	141,4%	20,40	12,32	90,8	23,3	99,3%	84,1%	83,5%
310,20	0,62	0,12	7,90	144,9%	20,41	12,45	90,8	23,1	99,2%	84,0%	83,3%
311,20	0,62	0,12	7,94	143,8%	20,41	12,41	91,6	22,8	99,2%	83,9%	83,2%
312,20	0,62	0,10	8,28	134,2%	20,39	12,05	91,4	22,0	99,4%	84,1%	83,5%
313,20	0,62	0,10	8,04	141,3%	20,40	12,31	91,5	21,3	99,4%	83,8%	83,4%
314,20	0,58	0,10	7,87	146,3%	20,41	12,49	91,2	21,1	99,4%	83,7%	83,2%
315,20	0,58	0,10	7,85	147,2%	20,42	12,52	91,2	21,0	99,4%	83,7%	83,2%
316,20	0,58	0,10	7,81	148,1%	20,42	12,55	91,1	21,0	99,4%	83,7%	83,2%
317,20	0,58	0,10	7,76	149,2%	20,42	12,59	90,9	20,9	99,4%	83,7%	83,2%
318,20	0,58	0,10	7,73	150,2%	20,42	12,62	90,9	20,8	99,4%	83,7%	83,1%
319,20	0,58	0,10	7,70	151,8%	20,42	12,68	91,0	20,6	99,4%	83,6%	83,1%
320,20	0,58	0,10	7,67	152,7%	20,43	12,71	91,1	20,6	99,4%	83,6%	83,0%

121,00	0,58	0,10	7,67	153,9%	20,43	13,71	91,2	20,6	99,4%	83,0%	83,0%
122,00	0,56	0,10	7,68	152,3%	20,43	13,69	91,2	20,5	99,4%	83,0%	83,0%
123,00	0,53	0,10	7,68	153,4%	20,43	13,73	91,1	20,6	99,4%	83,0%	83,0%
124,00	0,53	0,10	7,62	154,5%	20,43	13,76	91,1	20,6	99,3%	83,0%	83,0%
125,00	0,53	0,10	7,62	154,4%	20,43	13,76	91,0	20,6	99,3%	83,0%	83,0%
126,00	0,53	0,10	7,60	153,4%	20,43	13,73	90,7	20,3	99,4%	83,0%	83,0%
127,00	0,53	0,10	7,60	153,4%	20,43	13,73	90,4	20,3	99,4%	83,0%	83,0%
128,00	0,53	0,10	7,60	153,4%	20,43	13,73	90,5	20,3	99,4%	83,0%	83,0%
129,00	0,49	0,10	7,60	154,5%	20,43	13,78	90,6	20,1	99,4%	83,0%	83,0%
130,00	0,52	0,10	7,58	155,5%	20,43	13,80	90,6	20,3	99,4%	83,0%	83,0%
131,00	0,48	0,10	7,53	157,5%	20,44	13,87	90,5	20,0	99,4%	83,0%	82,9%
132,00	0,48	0,10	7,53	157,5%	20,44	13,87	90,4	20,3	99,4%	83,0%	83,0%
133,00	0,48	0,10	7,52	157,5%	20,44	13,87	90,4	20,3	99,4%	83,0%	83,0%
134,00	0,49	0,10	7,58	155,5%	20,43	13,80	90,3	20,2	99,4%	83,0%	83,0%
135,00	0,46	0,10	7,57	156,1%	20,43	13,83	90,3	20,1	99,4%	83,0%	83,0%
136,00	0,44	0,10	7,53	154,4%	20,43	13,76	90,3	20,0	99,3%	83,0%	83,0%
137,00	0,44	0,11	7,53	153,5%	20,43	12,74	90,3	20,0	99,3%	83,0%	83,0%
138,00	0,44	0,11	7,53	153,5%	20,43	12,74	90,4	19,7	99,3%	83,0%	83,0%
139,00	0,44	0,11	7,52	154,5%	20,43	12,76	90,4	20,0	99,3%	83,0%	83,0%
140,00	0,48	0,10	7,50	155,0%	20,43	12,76	89,9	20,1	99,3%	83,0%	83,0%
141,00	0,44	0,10	7,50	155,0%	20,43	12,76	90,3	20,0	99,4%	83,0%	83,0%
142,00	0,40	0,10	7,53	154,1%	20,43	12,75	90,2	19,9	99,4%	83,0%	83,1%
143,00	0,41	0,10	7,50	156,4%	20,44	12,89	90,2	19,9	99,4%	83,0%	83,0%
144,00	0,40	0,10	7,57	163,0%	20,45	13,03	90,4	20,0	99,4%	83,4%	82,9%
145,00	0,40	0,10	7,56	165,9%	20,45	13,11	90,0	20,0	99,4%	83,3%	82,8%
146,00	0,40	0,10	7,59	166,1%	20,45	13,12	90,1	19,9	99,4%	83,3%	82,8%
147,00	0,40	0,10	7,54	167,9%	20,46	13,17	89,9	19,9	99,4%	83,3%	82,8%
148,00	0,40	0,10	7,52	168,4%	20,46	13,19	89,3	20,2	99,4%	83,4%	82,9%
149,00	0,40	0,10	7,51	168,3%	20,46	13,19	89,1	20,3	99,4%	83,4%	82,9%
150,00	0,40	0,10	7,53	168,3%	20,46	13,18	88,9	20,3	99,4%	83,4%	82,9%
151,00	0,39	0,10	7,52	168,3%	20,46	13,18	88,8	20,0	99,4%	83,4%	82,9%
152,00	0,39	0,10	7,52	168,3%	20,46	13,18	88,7	20,0	99,4%	83,4%	82,9%
153,00	0,39	0,10	7,54	167,9%	20,46	13,16	88,6	21,0	99,3%	83,3%	83,0%
154,00	0,39	0,10	7,56	166,9%	20,45	13,14	88,5	21,1	99,3%	83,3%	83,0%
155,00	0,39	0,10	7,58	167,4%	20,45	13,15	88,4	21,2	99,3%	83,3%	83,0%
156,00	0,39	0,10	7,51	168,6%	20,46	13,20	88,0	21,3	99,3%	83,4%	83,0%
157,00	0,39	0,11	7,51	168,6%	20,46	13,20	88,1	21,4	99,3%	83,4%	83,0%
158,00	0,39	0,11	7,16	170,2%	20,46	13,24	88,0	21,5	99,3%	83,5%	82,9%
159,00	0,39	0,11	7,13	171,4%	20,46	13,26	88,1	21,6	99,3%	83,5%	82,9%
160,00	0,38	0,12	7,13	171,3%	20,46	13,26	88,2	21,7	99,3%	83,5%	82,9%
161,00	0,38	0,12	7,11	171,8%	20,46	13,26	88,2	21,7	99,3%	83,5%	82,9%
162,00	0,38	0,12	7,13	171,3%	20,46	13,26	88,3	21,8	99,3%	83,5%	82,9%
163,00	0,38	0,13	7,13	171,3%	20,46	13,26	88,2	21,7	99,1%	83,5%	82,9%
164,00	0,38	0,12	7,16	169,9%	20,46	13,24	88,3	21,8	99,1%	83,5%	82,9%
165,00	0,38	0,12	7,13	171,0%	20,46	13,26	88,3	21,7	99,1%	83,5%	82,7%
166,00	0,38	0,13	7,14	170,5%	20,46	13,26	88,6	21,5	99,1%	83,5%	82,7%
167,00	0,38	0,12	7,14	170,6%	20,46	13,26	88,9	21,4	99,1%	83,4%	82,7%
168,00	0,38	0,12	7,17	169,2%	20,46	13,22	88,8	21,3	99,1%	83,3%	82,7%
169,00	0,38	0,12	7,28	165,4%	20,45	13,11	88,9	21,3	99,2%	83,3%	82,8%
170,00	0,38	0,12	7,37	162,4%	20,45	13,02	88,8	21,3	99,2%	83,0%	83,0%
171,00	0,36	0,11	7,47	159,3%	20,44	12,93	88,6	21,4	99,3%	83,1%	83,1%
172,00	0,36	0,10	7,56	155,6%	20,43	12,80	88,1	21,7	99,3%	83,0%	83,1%
173,00	0,36	0,10	7,61	154,7%	20,43	12,77	87,8	21,8	99,4%	83,0%	83,4%
174,00	0,32	0,10	7,57	156,3%	20,43	12,82	87,6	21,8	99,4%	83,0%	83,4%
175,00	0,31	0,12	7,52	157,2%	20,44	12,86	87,5	21,9	99,2%	83,0%	83,2%
176,00	0,28	0,13	7,58	154,5%	20,43	12,76	87,5	21,9	99,1%	83,0%	83,1%
177,00	0,22	0,13	7,54	156,1%	20,43	12,83	87,8	22,0	99,0%	83,0%	83,1%
178,00	0,22	0,13	7,53	156,4%	20,43	12,84	88,4	21,9	99,0%	83,0%	83,0%
179,00	0,22	0,13	7,57	155,1%	20,43	12,80	88,7	22,1	99,0%	83,0%	83,0%
180,00	0,22	0,13	7,52	156,7%	20,43	12,85	88,7	22,1	99,0%	83,0%	83,0%
181,00	0,22	0,13	7,54	156,1%	20,43	12,83	88,7	22,1	99,0%	83,0%	83,0%
182,00	0,22	0,14	7,54	155,8%	20,43	12,82	89,0	22,2	98,9%	83,0%	82,8%
183,00	0,17	0,13	7,51	156,7%	20,43	12,85	89,4	22,2	98,9%	83,1%	82,8%
184,00	0,17	0,13	7,54	155,7%	20,43	12,82	89,9	22,2	98,9%	83,1%	82,7%
185,00	0,17	0,13	7,52	156,0%	20,43	12,84	90,0	22,2	98,9%	83,0%	82,8%
186,00	0,17	0,13	7,50	156,3%	20,43	12,81	90,1	22,1	98,9%	83,1%	82,8%
187,00	0,17	0,13	7,48	157,5%	20,44	12,88	90,5	22,4	98,9%	83,1%	82,8%
188,00	0,17	0,13	7,50	156,9%	20,43	12,86	91,1	22,0	98,9%	83,0%	82,7%
189,00	0,17	0,13	7,49	157,4%	20,44	12,88	91,1	21,9	98,9%	83,0%	82,7%
190,00	0,12	0,13	7,48	158,0%	20,44	12,91	91,2	22,1	98,9%	83,0%	82,8%
191,00	0,14	0,13	7,52	156,9%	20,44	12,84	91,3	22,0	98,9%	83,0%	82,8%
192,00	0,12	0,13	7,56	155,9%	20,44	12,90	91,7	22,0	98,9%	83,0%	82,9%
193,00	0,12	0,13	7,57	155,2%	20,44	13,00	91,8	22,0	98,9%	83,4%	82,9%
194,00	0,12	0,13	7,54	155,2%	20,45	13,03	91,8	22,1	98,9%	83,4%	82,4%
195,00	0,12	0,13	7,57	154,5%	20,45	13,10	92,3	22,1	98,9%	83,3%	82,4%
196,00	0,12	0,13	7,57	154,7%	20,45	13,10	92,1	22,1	98,9%	83,3%	82,4%
197,00	0,12	0,13	7,51	157,1%	20,45	13,17	92,4	22,0	98,9%	83,3%	82,3%
198,00	0,12	0,13	7,18	158,2%	20,46	13,20	92,5	22,0	98,9%	83,2%	82,2%
199,00	0,12	0,13	7,14	159,4%	20,46	13,24	92,5	22,0	98,9%	83,2%	82,2%
200,00	0,08	0,14	7,13	170,1%	20,46	13,26	92,5	22,0	98,9%	83,2%	82,2%
201,00	0,08	0,14	7,11	170,8%	20,46	13,26	92,7	22,1	98,9%	83,1%	82,2%
202,00	0,08	0,14	7,06	172,6%	20,46	13,33	92,6	22,0	98,9%	83,1%	82,2%
203,00	0,08	0,14	7,03	174,0%	20,47	13,37	92,5	22,0	98,9%	83,1%	82,2%
204,00	0,08	0,14	7,02	175,2%	20,47	13,40	92,5	22,0	98,9%	83,1%	82,2%
205,00	0,08	0,14	6,98	175,8%	20,47	13,42	92,4	22,0	98,9%	83,1%	82,2%
206,00	0,08	0,14	6,98	175,9%	20,47	13,42	92,2	22,1	98,9%	83,1%	82,2%
207,00	0,04	0,14	7,00	175,1%	20,47	13,40	92,1	22,0	98,9%	83,1%	82,1%
208,00	0,03	0,14	7,00	175,1%	20,47	13,40	92,0	22,0	98,9%	83,1%	82,1%
209,00	0,03	0,15	6,98	175,7%	20,47	13,42	92,1	22,1	98,9%	83,1%	82,1%
210,00	0,03	0,15	7,18	167,7%	20,46	13,19	92,0	22,0	98,7%	83,3%	82,2%
211,00	0,03	0,15	7,20	165,3%	20,45	13,12	92,2	22,0	98,7%	83,3%	82,2%
212,00	0,03	0,15	7,21	166,7%	20,45	13,17	92,3	22,0	98,7%	83,3%	82,2%
213,00	0,03	0,15	7,16	168,3%	20,46	13,22	92,3	22,1	98,8%	83,2%	82,2%
214,00	0,03	0,15	7,08	171,4%	20,46	13,30	92,3	22,0	98,7%	83,2%	82,1%
215,00	0,03	0,15	7,18	168,4%	20,46	13,22	92,5	22,1	98,7%	83,2%	82,2%
216,00	0,03	0,15	7,18	168,0%	20,46	13,20	92,6	22,1	98,9%	83,2%	82,2%

[redacted]
[redacted]

SFBA EPA EMISSION RESULTS

Test Duration: **416** min

PRESSURE FACTOR:	DGM 1st hr	0,973	
	DGM 1	0,974	
	DGM 2	0,975	
	DGM 3	1,000	
TEMPERATURE FACTORS	DGM 1st hr	0,988	
	DGM 1	0,989	
	DGM 2	0,985	
	DGM 3	0,992	
VOLUMES SAMPLED	DGM 1st hr	11,581	SCft
	DGM 1	70,469	SCft
	DGM 2	74,340	SCft
	DGM 3	49,606	SCft

TOTAL TUNNEL VOLUME : 148421

SAMPLE RATIOS

Sample Train 1st Hr:	1848,4
Sample Train 1:	2106,2
Sample Train 2:	1996,5

Paticulate concentration

Sample Train 1st Hr	**0,000130**	g/dscf
Sample Train 1	**0,000048**	g/dscf
Sample Train 2	**0,000047**	g/dscf
Room	**0,000002**	g/dscf

TOTAL EMISSIONS

Sample Train 1st Hr	**2,73**	g
Sample Train 1	**6,86**	g
Sample Train 2	**6,69**	g

EMISSION RATES

Sample Train 1st Hr	**2,73**	g/hr
Sample Train 1	**0,99**	g/hr
Sample Train 2	**0,96**	g/hr

	Train 1	Train 2	Train 1st Hr
Cs	4,825E-05	4,7081E-05	0,0001295

RESULTS

Average emission rate: 0,98 g/hr

Burn Rate : 0,86 Dry kg/hr

BAROMETRIC PRESSURE

Average:	29,91387874	In Hg
Start:	29,94340873	In Hg
End:	29,88434875	In Hg

DGM VALUES

DGM 1st hr	Final:	2658,900	Cuft
	Initial:	2646,820	Cuft
DGM 1	Final:	30515,759	Cuft
	Initial:	30442,164	Cuft
DGM 2	Final:	21651,851	Cuft
	Initial:	21574,040	Cuft
DGM #3	Final:	16746,630	Cuft
	Initial:	16696,531	Cuft

TEMPERATURES

DGM 1st hr	534,593	°R
DGM 1	533,886	°R
DGM 2	535,912	°R

CALIBRATION FACTORS

DGM 1st hr	0,9978
DGM 1	0,9936
DGM 2	0,9946
DGM #3	0,9982

TUNNEL FLOW RATE: 356,8 Dscfm

PARTICULATE CATCH

Total Sample Train 1:	3,40	mg
Total Sample Train 2:	3,50	mg
Total Sample Train 1 1st hour:	1,50	mg

DEVIATION: 1,28%

DATA 2023-10-19 EPA PI 20294 RUN 7 CAT 1 OTHER CATALYST
preburn / preload

Time acquisition minutes	Flue temp °F	Room temp °F	Tunnel dry bulb °F	Catalyst up °F	scale lbs	Tunnel Velocity Pressure in. Wc	Right °F	Back °F	bottom °F	Top °F	Left °F
1	69,17	68,88	68,90	70,11	4,87	0,0773	69,90	70,17	70,38	69,78	70,21
2	71,46	68,90	69,26	70,70	21,02	0,0768	69,92	70,19	70,27	69,80	70,22
3	84,88	68,93	70,86	87,44	5,07	0,0763	69,96	70,17	72,03	69,79	70,21
4	101,88	68,87	72,79	120,27	4,87	0,0763	69,98	70,22	88,84	69,81	70,27
5	154,93	68,84	76,47	163,81	4,87	0,0763	70,09	70,41	97,90	69,89	70,48
6	176,42	69,01	73,82	196,27	4,77	0,0763	70,43	70,78	101,98	70,04	71,02
7	197,87	68,84	74,21	200,44	4,87	0,0763	71,21	71,38	103,61	70,38	71,96
8	227,58	68,90	75,88	221,74	4,57	0,0768	72,58	72,17	104,57	70,90	73,28
9	266,35	68,84	78,27	258,60	4,47	0,0763	74,82	73,24	106,99	71,68	75,09
10	297,04	69,01	79,85	279,60	4,37	0,0763	77,46	74,84	107,98	72,83	77,37
11	327,23	69,03	82,19	320,28	4,18	0,0763	81,09	76,53	110,49	74,41	80,13
12	359,33	69,14	84,59	369,82	4,07	0,0763	85,27	78,69	113,68	76,39	83,40
13	389,19	69,24	86,80	411,29	3,87	0,0763	90,09	81,33	118,31	79,00	87,03
14	407,90	69,30	88,15	427,11	3,87	0,0758	95,51	84,18	123,58	82,24	91,07
15	419,50	69,24	88,84	444,45	3,77	0,0778	101,40	87,88	128,00	86,10	95,48
16	436,33	69,27	90,89	453,80	3,57	0,0758	107,88	91,28	132,61	90,40	100,27
17	450,16	69,38	91,88	473,58	3,47	0,0742	114,59	95,33	143,68	95,30	105,37
18	458,87	69,45	93,29	486,23	3,27	0,0747	121,27	99,69	158,45	100,76	110,90
19	471,87	69,27	94,47	501,39	3,17	0,0768	128,53	104,32	173,04	106,63	116,81
20	476,21	69,42	94,64	516,58	3,07	0,0768	136,57	109,38	184,68	112,84	123,09
21	480,71	69,49	95,48	526,61	2,98	0,0763	142,98	114,81	192,75	119,15	129,81
22	485,10	69,58	96,06	537,19	2,77	0,0758	150,22	120,19	197,12	125,86	137,29
23	491,45	69,55	97,10	553,15	2,87	0,0768	158,03	126,27	200,76	132,40	145,12
24	496,19	69,61	97,65	563,74	2,57	0,0763	166,35	132,46	204,80	139,20	153,23
25	493,29	69,61	96,88	564,03	2,37	0,0742	175,11	138,74	209,08	146,22	161,67
26	483,98	69,71	96,33	550,78	2,27	0,0743	184,74	145,23	214,88	153,04	170,22
27	478,39	69,70	95,57	541,91	2,17	0,0763	194,23	152,01	222,28	159,89	178,97
28	480,44	69,80	95,97	546,44	2,07	0,0768	203,44	159,10	231,80	166,53	187,84
29	478,54	69,75	95,88	544,77	1,87	0,0747	212,81	166,47	240,29	173,34	196,74
30	480,88	69,79	95,99	547,18	1,77	0,0763	222,18	174,15	247,85	179,23	205,58
31	482,53	69,77	96,15	552,11	1,73	0,0763	231,13	182,15	255,93	185,05	214,24
32	479,84	69,79	96,18	552,19	1,88	0,0763	239,28	190,27	265,93	191,72	222,91
33	481,53	69,77	96,11	551,63	1,87	0,0763	247,43	198,80	277,41	197,88	231,37
34	479,84	69,84	95,81	545,37	1,37	0,0763	255,78	207,37	290,32	203,80	239,70
35	477,17	69,88	95,28	539,55	1,29	0,0763	263,93	216,15	304,24	209,37	247,83
36	480,55	69,84	117,51	566,75	1,27	0,0742	271,70	224,84	319,37	214,88	255,69
37	464,85	70,13	157,53	552,44	13,43	0,0732	279,34	234,28	340,84	219,75	263,37
38	405,30	70,01	140,97	386,42	17,48	0,0727	286,12	244,13	350,06	224,77	270,29
39	388,34	69,99	139,31	491,12	17,28	0,0738	291,33	252,08	352,59	229,89	276,89
40	365,96	70,06	134,45	501,29	17,18	0,0742	295,45	259,97	353,00	233,44	282,53
41	353,88	70,02	132,43	478,19	16,98	0,0737	298,88	266,12	352,27	235,96	287,41
42	351,13	70,08	133,03	468,90	19,68	0,0732	301,85	271,24	351,04	238,20	291,30
43	391,35	70,00	117,14	464,18	16,58	0,0747	304,23	275,40	349,20	239,89	294,31
44	382,81	69,97	110,59	425,13	16,54	0,0737	306,87	278,56	347,79	240,37	296,55
45	372,31	69,86	106,59	397,27	16,38	0,0763	309,00	281,21	347,78	241,00	298,15
46	377,89	69,86	109,72	396,60	16,28	0,0763	310,73	283,36	349,13	241,23	299,08
47	389,16	69,88	112,04	412,53	16,08	0,0768	311,68	285,34	351,78	241,86	299,42
48	489,72	70,00	127,53	546,84	15,88	0,0745	311,83	287,80	356,11	241,96	299,29
49	565,17	70,03	141,83	660,73	15,58	0,0737	311,33	290,47	362,24	242,39	299,30
50	628,88	70,04	152,36	770,61	15,18	0,0722	310,74	293,82	369,85	243,01	299,89
51	690,29	70,12	163,06	815,63	14,88	0,0727	310,12	298,10	378,74	244,88	300,70
52	747,77	70,24	175,36	905,58	14,48	0,0727	309,90	302,93	389,16	247,45	302,78
53	775,29	70,40	180,09	960,22	13,98	0,0722	309,87	308,49	399,70	251,27	305,82
54	808,26	70,41	186,29	1027,24	13,58	0,0722	310,43	314,73	411,88	255,39	310,15
55	849,14	70,55	194,58	1076,14	13,08	0,0697	312,38	321,10	426,48	262,47	315,68
56	889,01	70,90	202,88	1097,46	12,68	0,0710	314,45	327,65	442,68	269,93	321,75
57	960,22	71,14	213,24	1125,54	12,18	0,0686	317,03	334,81	459,98	278,53	329,25
58	997,52	71,48	219,77	1136,82	11,68	0,0686	320,36	343,06	476,62	288,19	337,30
59	994,15	71,63	219,80	1135,97	11,17	0,0707	324,82	351,90	491,61	299,06	346,15
60	998,80	71,80	219,49	1139,59	10,78	0,0701	329,82	361,37	506,14	309,70	355,55
61	994,31	71,59	218,61	1143,90	10,28	0,0691	335,95	371,06	520,33	321,34	364,91
62	1010,02	72,12	220,97	1152,49	9,75	0,0691	342,84	381,09	532,63	332,52	374,75
63	1011,54	72,33	222,00	1155,56	9,28	0,0701	348,71	391,39	544,47	345,56	384,86
64	1021,43	72,45	223,49	1156,47	8,96	0,0692	355,48	401,85	556,30	357,72	396,04
65	876,84	72,21	181,41	1013,89	8,58	0,0701	362,84	412,33	566,15	369,12	404,77
66	828,41	71,72	144,61	964,78	8,28	0,0748	369,97	422,28	577,42	380,92	414,23
67	796,46	71,89	137,82	915,58	8,08	0,0729	377,58	430,93	585,49	392,08	423,45
68	787,80	71,84	136,28	891,63	7,83	0,0732	385,88	438,61	593,63	401,82	432,49
69	783,22	71,89	133,22	878,88	7,58	0,0742	390,55	445,71	601,59	411,85	440,85
70	781,42	71,96	131,57	872,83	7,38	0,0748	396,10	452,32	609,00	421,24	448,79
71	780,39	72,21	130,51	872,82	7,07	0,0742	403,27	458,54	615,41	430,33	456,14
72	771,80	72,39	129,61	874,72	6,78	0,0742	410,87	464,57	619,36	438,03	462,90
73	768,85	72,37	128,96	876,93	6,58	0,0747	416,28	470,31	621,78	445,83	469,26
74	768,56	71,98	128,38	876,08	6,27	0,0758	421,84	475,76	624,77	452,91	476,00
75	764,81	72,32	127,98	879,27	6,01	0,0763	427,51	480,84	626,47	459,88	480,36
76	800,30	72,16	107,84	1021,80	5,86	0,0748	432,94	485,19	626,11	463,12	484,87
77	839,33	72,88	101,70	1027,47	5,74	0,0739	438,89	488,19	613,63	466,12	488,28
78	502,55	72,57	98,89	1017,87	5,67	0,0742	443,25	490,77	596,78	469,34	491,44
79	478,32	72,43	96,41	1015,71	5,48	0,0763	446,77	492,22	584,07	472,21	494,81
80	456,40	72,15	93,75	1021,20	5,46	0,0763	449,73	492,53	570,89	475,71	496,85
81	441,83	72,21	93,13	1024,20	5,37	0,0773	451,41	492,73	558,61	477,92	498,89
82	426,88	72,28	91,87	1006,95	5,28	0,0763	452,49	493,24	546,23	479,15	500,44
83	413,89	72,34	90,61	981,38	5,17	0,0737	453,01	493,17	538,63	480,30	501,38
84	402,35	72,15	90,01	964,99	5,07	0,0757	453,22	492,30	530,55	480,36	502,00
85	390,25	72,26	89,06	937,51	4,97	0,0763	453,40	491,01	523,17	480,88	502,19
86	382,96	72,33	88,24	919,32	4,87	0,0763	453,06	489,79	516,50	480,73	502,00
87	373,88	72,27	87,81	894,28	4,87	0,0763	452,43	487,98	510,15	480,03	501,59
88	366,34	72,23	86,84	870,88	4,78	0,0763	451,99	485,85	504,58	478,86	501,01
89	358,89	72,38	86,39	857,61	4,78	0,0758	451,15	483,91	500,03	477,88	500,12
90	353,14	72,38	85,83	849,23	4,88	0,0773	450,38	481,93	496,37	476,40	499,04
91	346,88	72,33	85,40	840,05	4,58	0,0763	449,38	479,84	493,19	474,78	497,78
92	339,93	72,22	84,82	822,67	4,58	0,0742	448,40	477,43	490,38	473,81	496,45
93	333,38	72,38	84,33	804,86	4,46	0,0758	447,44	474,98	487,88	471,96	494,98
94	327,25	72,39	84,25	791,48	4,47	0,0763	446,47	472,93	485,01	469,83	493,42
95	321,85	72,40	83,90	783,49	4,36	0,0773	445,13	470,86	483,38	467,08	491,72

96	318,05	71,84	82,48	782,01	4,27	0,0758	444,28	467,94	479,43	466,89	469,74
97	311,26	71,86	80,36	786,23	4,27	0,0758	440,50	466,56	476,09	462,57	467,64
98	308,19	72,19	80,29	785,67	4,27	0,0758	440,03	463,36	472,77	461,13	466,08
99	301,49	72,03	80,19	787,00	4,27	0,0758	439,49	459,75	469,75	458,60	464,10
100	297,47	72,06	81,82	787,63	4,27	0,0757	437,04	458,40	466,96	455,56	462,56
101	293,82	71,93	81,58	787,66	4,25	0,0763	436,12	456,14	464,27	451,99	460,27
102	290,46	71,82	81,67	786,13	4,17	0,0766	433,17	453,86	462,09	448,65	458,37
103	287,87	71,78	80,90	784,69	4,17	0,0763	430,77	451,28	460,18	446,67	456,45
104	284,93	72,13	81,58	783,78	4,17	0,0768	428,89	448,38	458,63	442,46	454,41
105	282,02	72,19	81,19	783,08	4,08	0,0758	425,83	447,06	457,21	439,89	452,81
106	279,46	72,14	81,32	783,15	4,08	0,0763	423,57	444,66	455,63	436,89	450,81
107	277,24	71,98	80,97	782,91	4,07	0,0768	421,23	442,64	454,48	434,46	448,80
108	274,76	71,84	80,73	784,32	3,98	0,0763	418,10	440,34	453,17	431,45	446,16
109	272,66	72,07	80,81	783,18	3,98	0,0774	416,77	438,97	451,89	428,38	444,13
110	270,49	72,04	80,74	783,09	3,98	0,0766	414,45	437,18	450,77	426,05	442,26
111	268,26	72,00	80,58	774,73	3,88	0,0758	412,02	435,49	449,66	423,14	440,35
112	265,49	71,99	80,44	770,46	3,88	0,0763	410,80	433,23	449,24	419,80	438,66
113	263,66	71,82	79,89	769,49	3,87	0,0767	408,43	431,56	448,96	415,46	436,72
114	261,53	71,97	79,55	761,19	3,88	0,0763	406,84	429,61	448,79	413,62	435,03
115	259,22	71,91	79,90	755,19	3,87	0,0763	404,26	427,89	448,92	410,81	433,79
116	257,62	71,90	79,58	757,30	3,77	0,0778	403,22	425,88	449,33	406,87	432,47
117	256,63	71,73	79,80	757,28	3,77	0,0758	400,13	424,00	450,03	403,29	431,12
118	255,11	71,99	79,43	758,32	3,77	0,0763	398,12	422,06	451,04	400,66	449,84
119	256,09	71,84	79,40	759,20	3,76	0,0773	396,28	420,07	452,24	397,77	448,21
120	254,96	72,02	79,15	762,60	3,77	0,0779	394,83	418,24	453,50	395,20	446,44
121	253,60	72,15	79,09	760,61	3,88	0,0763	393,54	416,96	454,63	392,07	444,73
122	252,56	71,93	78,58	757,60	3,87	0,0773	390,80	414,46	455,78	388,10	442,93
123	250,74	72,15	78,63	755,05	3,87	0,0768	389,21	412,34	456,78	385,32	441,06
124	248,28	71,98	79,03	744,36	3,87	0,0773	387,02	411,72	457,83	382,34	439,18
125	246,84	72,28	78,83	734,80	3,87	0,0763	385,29	410,28	458,90	379,76	437,31
126	244,87	72,34	78,57	727,40	3,87	0,0778	383,70	408,72	459,93	376,54	435,42
127	242,27	72,27	78,18	720,72	3,81	0,0764	382,50	407,17	460,76	372,82	433,46
128	241,23	72,32	78,29	714,57	3,87	0,0763	380,35	405,96	461,58	369,47	431,47
129	239,10	72,34	78,19	709,96	3,87	0,0778	378,90	404,37	462,33	366,03	429,45
130	237,71	72,31	77,96	707,49	3,87	0,0773	377,44	403,27	462,94	362,94	427,46
131	236,29	72,08	78,07	704,72	3,84	0,0775	375,82	401,47	463,96	359,73	425,44
132	234,36	72,04	78,04	701,65	3,47	0,0778	374,50	400,77	465,01	356,75	423,35
133	233,18	72,08	78,17	698,37	3,47	0,0763	373,21	399,78	466,28	353,72	421,32
134	232,13	71,71	77,91	694,46	3,47	0,0763	371,83	398,88	467,78	350,50	419,29
135	230,71	71,78	77,94	690,46	3,47	0,0778	370,84	397,21	469,37	346,17	417,22
136	229,40	71,97	77,62	687,80	3,47	0,0768	369,48	395,40	471,07	344,72	414,84
137	228,06	72,02	77,39	685,62	3,38	0,0772	368,33	394,71	472,92	341,87	412,96
138	227,29	71,89	77,23	682,75	3,38	0,0763	366,92	393,51	474,71	338,37	410,96
139	226,32	71,78	77,24	679,99	3,38	0,0763	365,68	392,26	476,23	335,37	408,89
140	225,02	71,78	77,42	677,77	3,38	0,0773	364,45	391,28	477,44	332,67	407,15
141	224,10	71,71	77,53	674,15	3,38	0,0768	363,24	389,87	478,11	329,89	405,18
142	222,81	71,81	77,43	668,30	3,38	0,0764	362,15	388,21	478,24	327,33	403,27
143	221,86	71,72	77,27	666,62	3,28	0,0763	360,99	387,80	478,36	324,20	401,64
144	220,34	71,70	77,09	660,22	3,28	0,0758	359,55	385,63	478,44	321,50	399,19
145	219,20	71,78	76,99	656,58	3,28	0,0768	358,67	384,20	478,66	318,11	397,56
146	218,19	71,78	76,83	655,15	3,28	0,0764	357,75	384,21	478,62	315,54	396,09
147	290,96	72,09	103,71	611,01	3,27	0,0763	356,84	382,36	479,46	314,29	394,76

POLYTESTS
TESTING THROUGH YOUR REALITY

Date: 2023. 10- 19 Manufacturer: Heatstore Model: 8034

Project #: pt 2024 Run: 3 Tech: MA Reviewer: M

- Heating starts start Fire
- After 2 min close Door
- Fan off
- by pass open
- All lights when preheat
- After 3 min close Door
- All 62 lbs close air inlet, close by pass and open Fan (low)
- All 3 lbs open Door Remove coal Bed close Door
- After 2 min insert load open air inlet and close Door
- Fan off
- At 5 min close air inlet
- At 30 min open Fan (low)

TEST LOAD CONFIGURATION

POLYTESTS
TESTING THROUGH YOUR REALITY

PRE / POST CHECKS

Date: 2023-10-~~18~~ 19 Manufacturer: Hearthstone Model: 8024

Project #: PI 20294 Run: 7 Tech: MM Reviewer: DO

	Equipment #	Time	12%	22%
Moisture Meter Calibration Check:	EM-334	7:00	ok	ok

	Pre-Test	Post-Test
Facility Conditions:		
Air Velocity from less than 2 feet	0 (max50 Fpm)	0 (max50 Fpm)
Smoke Capture Check (tunnel velocity)	ok	NA
Picture	4 sides ok	ok
Wood Heater Conditions:		
Date Wood Heater Stack Cleaned	2023-10-18	
Date Dilution Tunnel Cleaned	2023-10-18	
Induced Draft Check (max 0.005 H2O)	ok	
Traverse before ignition	ok	
Temperature System:		
Ambient (65°-90°F)		ok °F
Proportional Checks:		
Thermocouple check	ok	
Pitot Clean	ok	
Pitot verification	ok	
Pictures for report	Side	ok
	Coal bed	ok
	Load	ok
	Load in stove	ok
	Fuel adjustment	ok
Load Length 5/6 of firebox Length +- 1inch		ok

POLYTESTS
TESTING THROUGH YOUR REALITY

Date: 2023-10-19 Manufacturer: Hearthstone Model: 8024

Project #: PI 20294 Run: 7 Tech: MM Reviewer: DO

Leakage Checks Tunnel Samplers

	System 1st hour		System 1		System 2		Ambient	
Unplugged Flow Rate = .25cfm	Pre-Test ASTM (-15) CSA B415 (-5)	Post-Test (Max test)	Pre-Test ASTM (-15) CSA B415 (-5)	Post-Test (Max test)	Pre-Test ASTM (-15) CSA B415 (-5)	Post-Test (Max test)	Pre-Test ASTM (-15) CSA B415 (-5)	Post-Test (Max test)
Vacuum (inches Hg.)	-10	-10	-10	-10	-10	-10	-10	-10
Final 1minute DGM (Liter)	2646.78	2658.99	862025.04	864110.72	610907.29	613113.51	472791.56	474212.72
Initial 1minute DGM (Liter)	2646.78	2658.98	862025.00	864110.70	610907.20	613113.51	472792.56	474212.72
Change (Liter)	∅	0.01	0.04	0.02	0.09	∅	∅	∅
Allowable leakage .04 x Sample rate or 0.28Lpm CSA B415 (0.56)								
Check OK	ok	ok	ok	ok	ok	ok	ok	ok

POLYTESTS
TESTING THROUGH YOUR REALITY

Date: 2023-10-19 Manufacturer: Hearthstone Model: 8024

Project #: pt 20244 Run: 7 Tech: M.M Reviewer: DP

Leakage Checks Flue Gas Sampler

Plugged Probe	Pre-Test	Post Test
Vacuum (inches Hg.)	-5	-5
Rotameter Reading (mml/min.)	0	0
Flow Rate (lpm)	1.5	1.5
Allowable (.02 x Sample Rate)	30	30
Check OK	ok	ok

Leakage Checks Pitot

Plugged Probe	Pre-Test 3 H2o static	Pre-Test 0.4-0.5 H2o velocity	Post Test 3 H2o Static	Post Test 0.4-0.5 H2o velocity
Vacuum (inches Hg.)	3	.4	3	.4
Check OK (no change after 15 sec.)	ok	ok	ok	ok

POLYTESTS
TESTING THROUGH YOUR REALITY

Date: 2023-10-19 Manufacturer: Hearthstone Model: 8024

Project #: PI 20294 Run: 7 Tech: MM Reviewer: [illegible]

Scale Type	Audit		Measured Weight
	Equipment #	Weight	
Platform	EM-090	4.4 lbs, Class F	4.4 lbs
Platform	EM-~~E~~ 205	10.00 Kg, Class F	10.00 Kg
Wood	EM-090	4.40 lbs, Class F	4.40 lbs
Analytical	EM-235	100 mg, Class S	100 mg
Analytical	EM-129	200 g, Class S	200 g

LIMITS OF WEIGHT RANGES

ANALYTICAL SCALE:.....50%-150% of dry filter weight, ± 0.1 mg
PLATFORM SCALE.....20%-80% of ideal test load weight, ± 0.1 lbs or 1%
WOOD SCALE.....20%-80% of ideal test load weight, ± 0.01 lbs or 1%

POLYTESTS

CONTINUOUS ANALYZERS

Date: 2-23-6-19 Manufacturer: Hearthstone Model: 8024

Project #: PS 202 99 Run: 7 Tech: M.M Reviewer: DP

FOR TUNNELS < 12 in

Barometric pressure (P_{bar}) _____ (KPa.) Static pressure (P_q) _____ (inches w.c.)
Inside diameter: Port A _____ Port B _____
Tunnel cross sectional area: .1963Ft^2
Pitot tube type: Standard

Traverse Point	Position (inches)			Velocity Head Δ_s (inches H_2O)	Tunnel Temperature (°F)
Tunnel diameter	6 po	7 po	8 po		
A- Centroid	3.00	3.50	4	0.078	78.22
B - Centroid	3.00	3.50	4	0.077	78.11
A-1	0.40	0.50	0.50	0.063	78.22
A-2	1.50	1.75	2	0.073	78.16
A-3	4.50	5.25	6	0.074	78.16
A-4	5.60	6.5	7.5	0.063	78.14
B-1	0.40	0.50	0.50	0.062	78.11
B-2	1.50	1.75	2	0.073	78.02
B-3	4.50	5.25	6	0.071	78.02
B-4	5.60	6.5	7.5	0.063	78.00
				AVERAGE	

CONTINUOUS ANALYZERS

Date:_____ Manufacturer:_____ Model:_____

Project #: _____ Run:_____ Tech:_____ Reviewer:_____

FOR TUNNELS 12 in

Barometric pressure (P_{bar}) _____ (KPa.) Static pressure (P_g) _____ (inches w.c.)
Pitot tube type: Standard

Traverse Point	Position (inches)	Velocity Head Δ_p (inches H_2O)	Tunnel Temperature (°F)
A Center	6		
B Center	6		
A-1	0.53		
A-2	1.75		
A-3	3.55		
A-4	8.45		
A-5	10.25		
A-6	11.47		
B-1	0.53		
B-2	1.75	N.A	
B-3	3.55		
B-4	8.45		
B-5	10.25		
B-6	11.47		

POLYTESTS

CONTINUOUS ANALYZERS

Date: 2023-10-19 Manufacturer: Horiba Model: 8034

Project #: PI 20994 Run: 2 Tech: M.M Reviewer: DP

Pre-Test (Adjust and Record)

	ZERO		SPAN		CAL. (Record Only)	
CO	0	0	3029	3000	~~0~~ 1020	1000
Tolerance CO	0	+/- 0.02	0029	+/- 0.15	0020	+/- 0.05
CO_2	0	0	1797	18.00	986	19.00
Tolerance CO2	0	+/- 0.02	903	+/- 0.5	014	+/- 0.5
O_2 informative CSA B415 calculated value	na	na	na	na	na	na
	Actual	Should Be	Actual	Should Be	Actual	Should Be

Post Test (Record Only)

	Zero	Span	Cal.	Zero Drift	Limit	Span Drift	Limit	Cal. Drift	Limit	OK?	Not OK*
CO	0	3031	1018	0	0.02	0002	0.15	002	0.05	✓	
CO_2	0	1794	990	0	0.02	003	0.5	004	0.5	✓	

POLYTESTS

TEST DATA LOG

Date: 2023 10-19 Manufacturer: Hearthstone Model: 8024

Project #: pI 20 294 Run: 7 Tech: MM Reviewer: DP

RAW DRY GAS METER READINGS

		System 1st hour	System 1	System 2	Blank
Test	Final (Liter)	2658.90	864 110.05	613 117.13	474 211.75
	Initial (Liter)	2646.82	861 026.08	610 908.76	473 793.10

AMBIENT CONDITIONS

	Before	After
Barometer (kPa):	101.4	101.2
Dry Bulb (F):	72.5	71.6
Humidity (%):	40.7	46.3

POLYTESTS
TESTING THROUGH YOUR REALITY

FUEL DATA

Date: 2023-10-19 Manufacturer: Hearthstone Model: 8024

Project #: PI 20294 Run: 7 Tech: Mr Reviewer: DD

FUEL DESCRIPTION:

Type of wood:

PRE-TEST LOAD

Piece Size	Weight		Meter Moisture Content (% dry) *				
1 1/2 x 3 1/2 x 17.5 in.	2310	lbs.	219	218	217	218	217
1 1/2 x 3 1/2 x 17.5 in.	2290	lbs.	220	219	216	216	217
1 1/2 x 3 1/2 x 17.5 in.	2252	lbs.	203	204	204	206	205
1 1/2 x 3 1/2 x 17.5 in.	2260	lbs.	200	203	204	204	205
1 1/2 x 3 1/2 x 12 in.	1422	lbs.	207	203	206	208	204
1 1/2 x 3 1/2 x 12 in.	1554	lbs.	206	205	205	205	204
1 1/2 x 3 1/2 x 12 in.	1410	lbs.	208	207	208	207	209
1 1/2 x 3 1/2 x 12 in.	1424	lbs.	204	205	204	203	203
1 1/2 x 3 1/2 x 12 in.	1510	lbs.	206	207	207	206	208
x x in.		lbs.					
x x in.		lbs.					
x x in.		lbs.					
x x in.		lbs.					
x x in.		lbs.					
x x in.		lbs.					
x x in.		lbs.					
x x in.		lbs.					
x x in.		lbs.					
x x in.		lbs.					
x x in.		lbs.					
x x in.		lbs.					
x x in.		lbs.					
x x in.		lbs.					

TEST LOAD WEIGHT: 1643 lbs

POLYTESTS
TESTING THROUGH YOUR REALITY

FUEL DATA

Date: 2023-10-19 Manufacturer: Hearthstone Model: 8024

Project #: pf 22494 Run: 7 Tech: MA Reviewer: BO

FUEL DESCRIPTION:

Type of wood:

TEST LOAD

Piece Size	Weight		Meter Moisture Content (% dry)*				
1 1/2 x 3 1/2 x 17 1/2 in.	1 7/4	lbs.	20.6	20.3	20.2	20.4	20.3
1 1/2 x 3 1/2 x 17 1/2 in.	1 8/16	lbs.	20.6	20.6	20.5	20.5	20.4
1 1/2 x 3 1/2 x 17 1/2 in.	1 9/18	lbs.	21.2	21.1	21.0	20.9	20.9
3 1/2 x 3 1/2 x 17 1/2 in.	4 2 8	lbs.	21.1	21.0	21.0	21.0	21.1
3 1/2 x 3 1/2 x 13.5 in.	4 3.2	lbs.	20.9	21.0	20.8	20.8	20.7
x x in.		lbs.					
1 1/2 x 3/4 x 5 in.	0 10.4	lbs.			19.3		
1 1/2 x 3/4 x 5 in.	0 13.4	lbs.			19.4		
1 1/2 x 3/4 x 5 in.	6 13/6	lbs.			19.4		
1 1/2 x 3/4 x 5 in.	0 11.2	lbs.			19.3		
1 1/2 x 3/4 x 5 in.	0 10.4	lbs.			19.4		
1 1/2 x 3/4 x 5 in.	0 11.2	lbs.			19.1		
1 1/2 x 3/4 x 5 in.	0 11.0	lbs.			19.4		
1 1/2 x 3/4 x 5 in.	0 09.6	lbs.			19.3		
1 1/2 x 3/4 x 5 in.	0 10.2	lbs.			19.8		
1 1/2 x 3/4 x 5 in.	0 13.4	lbs.			19.3		
1 1/2 x 3/4 x 5 in.	0 11.6	lbs.			19.3		
1 1/2 x 3/4 x 5 in.	0 09.8	lbs.			19.4		
1 1/2 x 3/4 x 5 in.	0 09.8	lbs.			19.5		
1 1/2 x 3/4 x 5 in.	0 09.2	lbs.			19.4		
1 1/2 x 3/4 x 5 in.	0 13.0	lbs.			19.3		
1 1/2 x 3/4 x 5 in.	0 13.4	lbs.			19.3		
x x in.		lbs.					
x x in.		lbs.					
x x in.		lbs.					
x x in.		lbs.					
x x in.		lbs.					

TEST LOAD WEIGHT: 15 83 lbs Min 20%:..... Max 25%:.....

POLYTESTS

DILUTION TUNNEL PARTICULATE SAMPLER DATA

Date: 2023- 10- 18 Manufacturer: Hearthstone Model: 8025

Project #: pI 20194 Run: 3 Tech: M. M Reviewer: SP

Pre-test Weight Record		TEST FILTERS					
		SYSTEM 1st hour			SYSTEM 1		
		Probe & Housing Number	Front & Back Filter Number	gaskets	Probe & Housing Number	Front & Back Filter Number	gaskets
Date	Time	006	127- 128	3	17	129 - 130	29
2023- 10- 18	17:00	61 3716	0 2440	34 3340	108 9413	0 2439	34 3095
2023- 10- 19	8:00	61 3716	0 2440	34 3341	108 9415	0 2438	34 3096

Post-test Weight Record		TEST FILTERS					
		SYSTEM 1st hour			SYSTEM 1		
		Probe & Housing Number	Front & Back Filter Number	gaskets	Probe & Housing Number	Front & Back Filter Number	gaskets
Date	Time	006	127- 128	3	17	129- 130	29
2023- 10- 19	16:45	61 3723	0 2445	34 3367	108 9416	0 2468	34 3110
2023- 10- ~~23~~ 24 pm	8:00	61 3717	~~0 2445~~ 0 2445 pm	34 3354	108 9415	0 2468	34 3095
2023 10- ~~23~~ 24 pm	8:00	61 3717	0 2441	34 3354	108 9415	0 2468	34 3099

POLYTESTS
TESTING THROUGH YOUR REALITY

DILUTION TUNNEL PARTICULATE SAMPLER DATA

Date: 2023-10-18 Manufacturer: Hearthstone Model: 8024

Project #: PI 20294 Run: 7 Tech: MM Reviewer: BO

		TEST FILTERS			
		SYSTEM 2			
Pre-test Weight Record		Probe & Housing Number	Front & Back Filter Number	gaskets	Blank Filter
Date	Time	50	131-132	40	133
2023-10-18	17:00	1076477	02433	342711	01220
2023-10-19	8:00	1076478	02434	342710	01221

		TEST FILTERS				
		SYSTEM 2				
Post-test Weight Record		Probe & Housing Number	Front & Back Filter Number	gaskets	Blank Filter	End test time and date
Date	Time	50	131-132	40	133	
2023-10-19	16:45	1076478	02459	342733	01222	2023-10-19
2023-10-23	8:00	1076478	02459	342720	01222	16:30
2023-10-24	8:00	1076478	02459	342720	01222	

APPENDIX 2: Proportionality results

Average	Average	Average	Average								Average
17,92	Inlet +	Inlet +	Inlet +								0,277
	Outlet	Outlet	Outlet	Average	Average	Average	# 1st Hr	#1	#2		
Tunnel	Temp.	Temp.	Temp.	98,43	103,28	102,25	System 1st Hr	System 1	System 2		SQRT
Velocity	Meter 1st Hr	Meter 1	Meter 2	Proportional Rates			Vol.Std.	Vol.Std.	Vol.Std.		Delta-P
				PR1at hour	PR1	PR2				Time	
Ft/Sec	Deg. R	Deg. R	Deg. R	%	%	%	(ft3)	(ft3)	(ft3)	min	(In H2O)2
18,212	535,073	533,0	532,8				0,183	0,173	0,182	0	0,277
17,894	535,176	533,1	532,9	98,1	103,7	103,1	0,183	0,173	0,182	1	0,277
17,852	535,222	533,1	533,0	98,1	103,7	103,0	0,183	0,173	0,182	2	0,276
17,930	535,260	533,1	533,1	97,9	103,4	102,6	0,183	0,173	0,182	3	0,277
17,885	535,326	533,2	533,2	98,3	104,1	103,3	0,183	0,173	0,182	4	0,276
18,076	535,380	533,2	533,4	97,4	102,9	102,1	0,183	0,173	0,182	5	0,279
18,249	535,441	533,3	533,5	96,4	101,8	101,2	0,183	0,173	0,182	6	0,282
18,035	535,509	533,3	533,7	97,7	103,4	102,5	0,183	0,173	0,182	7	0,278
17,803	535,543	533,4	533,8	99,1	104,9	104,1	0,183	0,173	0,182	8	0,274
17,991	535,550	533,5	533,9	98,2	103,7	103,0	0,183	0,173	0,182	9	0,277
18,108	535,584	533,5	534,0	97,5	103,3	102,4	0,183	0,173	0,182	10	0,279
18,054	535,634	533,5	534,1	97,8	103,5	102,8	0,183	0,173	0,181	11	0,278
17,945	535,721	533,6	534,2	98,5	104,6	103,3	0,183	0,173	0,181	12	0,276
17,820	535,803	533,6	534,4	99,3	105,1	104,0	0,183	0,173	0,181	13	0,274
17,834	535,865	533,7	534,6	99,3	105,1	104,1	0,183	0,173	0,181	14	0,274
18,012	535,916	533,7	534,7	98,3	103,9	103,1	0,183	0,173	0,181	15	0,277
18,252	536,007	533,8	534,9	97,1	102,6	101,8	0,183	0,173	0,182	16	0,281
18,016	536,063	533,9	535,0	98,3	104,1	103,1	0,183	0,173	0,181	17	0,277
17,970	536,185	534,0	535,1	98,5	104,1	103,1	0,183	0,173	0,181	18	0,276
18,097	536,248	534,0	535,2	98,0	103,9	102,8	0,183	0,173	0,181	19	0,278
17,972	536,316	534,1	535,4	98,6	104,4	103,4	0,183	0,173	0,181	20	0,276
17,973	536,368	534,1	535,5	98,7	104,4	103,9	0,183	0,173	0,182	21	0,276
17,985	536,421	534,2	535,6	98,7	104,5	103,5	0,183	0,173	0,182	22	0,276
17,922	536,464	534,2	535,7	99,0	104,8	104,2	0,183	0,173	0,182	23	0,275
17,978	536,538	534,3	535,8	98,6	104,6	103,4	0,183	0,173	0,182	24	0,276
17,975	536,546	534,3	535,9	98,5	104,3	103,3	0,183	0,173	0,181	25	0,276
17,916	536,648	534,3	536,0	99,0	104,8	103,9	0,183	0,173	0,181	26	0,275
17,794	536,717	534,3	536,2	99,6	105,4	104,6	0,183	0,173	0,181	27	0,273
17,907	536,697	534,4	536,2	98,9	104,8	103,7	0,183	0,173	0,181	28	0,275
17,896	536,704	534,5	536,3	98,8	104,5	103,4	0,183	0,173	0,181	29	0,275
17,905	536,740	534,5	536,3	98,8	104,9	103,6	0,183	0,173	0,181	30	0,275
17,940	536,806	534,5	536,3	98,8	104,4	103,6	0,183	0,173	0,181	31	0,276
17,911	536,807	534,6	536,4	98,9	104,5	103,9	0,183	0,172	0,181	32	0,275
17,969	537,004	534,6	536,5	98,4	104,3	103,2	0,183	0,172	0,181	33	0,276
17,847	537,109	534,6	536,6	99,1	105,2	103,8	0,183	0,173	0,181	34	0,274
18,000	537,187	534,7	536,7	98,2	104,2	102,9	0,183	0,173	0,181	35	0,277
17,967	537,264	534,8	536,8	98,4	104,3	103,3	0,183	0,173	0,181	36	0,276
17,780	537,389	534,8	536,9	99,4	105,3	104,4	0,183	0,173	0,181	37	0,273
17,779	537,460	534,9	537,0	99,3	105,4	104,3	0,182	0,173	0,181	38	0,273
17,722	537,496	534,9	537,1	99,7	105,7	104,7	0,183	0,173	0,181	39	0,273
17,778	537,501	535,0	537,2	99,3	105,3	104,2	0,182	0,173	0,181	40	0,273
18,021	537,552	535,0	537,2	98,0	104,0	102,9	0,183	0,173	0,181	41	0,277
17,914	537,622	535,1	537,3	98,6	104,5	103,4	0,182	0,173	0,181	42	0,275
17,904	537,680	535,1	537,4	98,6	104,7	103,6	0,182	0,173	0,181	43	0,275
18,022	537,718	535,2	537,4	97,9	104,1	103,2	0,182	0,173	0,181	44	0,277
17,955	537,769	535,2	537,5	98,4	104,5	103,2	0,183	0,173	0,181	45	0,276
17,891	537,821	535,3	537,6	98,6	104,9	103,2	0,182	0,173	0,181	46	0,275
17,951	537,850	535,3	537,7	98,2	104,3	103,0	0,182	0,173	0,181	47	0,276
17,885	537,875	535,3	537,7	98,5	104,4	103,6	0,182	0,173	0,181	48	0,275
17,994	537,962	535,4	537,8	97,8	103,8	102,5	0,182	0,173	0,181	49	0,277
17,940	538,040	535,4	537,8	98,0	104,2	103,5	0,182	0,173	0,181	50	0,276
17,815	538,109	535,4	537,9	98,8	104,7	103,9	0,182	0,173	0,182	51	0,274
17,995	538,138	535,5	538,0	97,8	103,8	102,4	0,182	0,173	0,181	52	0,277
17,822	538,074	535,6	538,0	98,7	104,6	103,7	0,182	0,173	0,181	53	0,275
17,862	538,067	535,6	538,0	98,2	104,2	103,0	0,182	0,172	0,181	54	0,275
17,917	538,109	535,7	538,1	97,9	103,9	103,1	0,182	0,172	0,181	55	0,276
17,858	538,181	535,7	538,1	98,3	104,4	103,0	0,182	0,173	0,181	56	0,275
17,820	538,216	535,7	538,2	98,5	104,5	103,3	0,182	0,173	0,181	57	0,275
17,910	538,223	535,8	538,3	98,2	103,9	103,0	0,183	0,173	0,181	58	0,276
17,916	538,261	535,8	538,4	98,0	104,0	103,0	0,182	0,173	0,181	59	0,276
17,977	537,949	535,8	538,5	0,0	103,7	102,4	0,000	0,173	0,181	60	0,277
17,914	537,812	535,9	538,5	0,0	103,7	102,9	0,000	0,172	0,181	61	0,276
18,074	537,738	535,9	538,5	0,0	103,1	101,7	0,000	0,173	0,181	62	0,279
17,843	537,693	535,9	538,4	0,0	104,2	103,0	0,000	0,173	0,181	63	0,275
17,961	537,673	536,0	538,4	0,0	103,5	102,4	0,000	0,173	0,181	64	0,277
18,021	537,656	536,0	538,3	0,0	103,1	101,9	0,000	0,173	0,181	65	0,278
17,713	537,660	536,0	538,3	0,0	104,9	103,6	0,000	0,173	0,181	66	0,273
17,891	537,679	536,1	538,3	0,0	103,9	102,8	0,000	0,173	0,181	67	0,276
17,894	537,704	536,1	538,3	0,0	103,7	102,7	0,000	0,173	0,181	68	0,276
17,882	537,723	536,1	538,3	0,0	103,7	102,8	0,000	0,172	0,181	69	0,276
17,937	537,755	536,1	538,3	0,0	103,4	102,3	0,000	0,173	0,181	70	0,277
18,112	537,778	536,2	538,3	0,0	102,2	101,4	0,000	0,172	0,181	71	0,280
17,869	537,786	536,2	538,3	0,0	103,7	102,6	0,000	0,172	0,181	72	0,276
17,912	537,820	536,3	538,4	0,0	103,3	102,3	0,000	0,173	0,181	73	0,277
17,917	537,840	536,3	538,4	0,0	103,0	102,3	0,000	0,172	0,181	74	0,277
17,917	537,859	536,4	538,5	0,0	103,3	102,1	0,000	0,172	0,181	75	0,277
17,917	537,860	536,5	538,5	0,0	103,1	102,1	0,000	0,172	0,181	76	0,277
17,977	537,852	536,6	538,5	0,0	103,1	102,2	0,000	0,172	0,181	77	0,278
18,099	537,860	536,7	538,5	0,0	102,0	101,1	0,000	0,172	0,181	78	0,280

17,860	537,869	536,7	538,5	0,0	103,6	102,4	0,000	0,172	0,181	79	0,276
18,091	537,918	536,7	538,5	0,0	102,1	101,3	0,000	0,172	0,181	80	0,280
17,853	537,955	536,7	538,5	0,0	103,5	102,5	0,000	0,172	0,181	81	0,276
17,852	537,988	536,6	538,5	0,0	103,4	102,5	0,000	0,172	0,181	82	0,276
17,732	538,023	536,6	538,6	0,0	104,2	103,1	0,000	0,172	0,181	83	0,274
17,848	538,049	536,7	538,7	0,0	103,4	102,6	0,000	0,172	0,181	84	0,276
17,962	538,091	536,7	538,7	0,0	102,9	101,6	0,000	0,173	0,181	85	0,278
17,897	538,093	536,7	538,6	0,0	103,1	102,0	0,000	0,173	0,181	86	0,277
18,079	538,118	536,7	538,8	0,0	102,0	100,9	0,000	0,172	0,181	87	0,280
17,835	538,134	536,8	538,9	0,0	103,4	102,4	0,000	0,172	0,181	88	0,276
18,013	538,135	536,8	538,9	0,0	102,4	101,3	0,000	0,172	0,181	89	0,279
17,825	538,161	536,8	538,9	0,0	103,4	102,3	0,000	0,172	0,181	90	0,276
17,956	538,183	536,8	538,9	0,0	102,7	101,7	0,000	0,172	0,181	91	0,278
17,898	538,175	536,9	538,9	0,0	103,1	101,9	0,000	0,172	0,181	92	0,277
17,834	538,207	536,9	538,9	0,0	103,3	102,4	0,000	0,172	0,181	93	0,276
17,836	538,218	536,9	538,9	0,0	103,5	102,3	0,000	0,172	0,181	94	0,276
17,950	538,217	537,0	539,0	0,0	102,9	101,7	0,000	0,173	0,181	95	0,278
17,825	538,225	537,0	539,0	0,0	103,4	102,3	0,000	0,173	0,181	96	0,276
17,941	538,221	537,0	539,1	0,0	102,5	101,8	0,000	0,172	0,181	97	0,278
17,987	538,192	537,1	539,1	0,0	102,2	101,0	0,000	0,172	0,181	98	0,279
17,822	538,195	537,1	539,1	0,0	103,2	102,4	0,000	0,172	0,181	99	0,276
17,919	538,206	537,1	539,0	0,0	102,6	101,7	0,000	0,172	0,181	100	0,278
17,825	538,218	537,1	539,0	0,0	103,4	102,1	0,000	0,172	0,181	101	0,276
17,939	538,223	537,1	539,0	0,0	102,7	101,8	0,000	0,172	0,181	102	0,278
17,878	538,270	537,1	539,1	0,0	103,1	101,8	0,000	0,173	0,181	103	0,277
17,820	538,279	537,0	539,1	0,0	103,4	102,0	0,000	0,173	0,180	104	0,276
18,059	538,275	537,1	539,1	0,0	102,0	100,9	0,000	0,173	0,181	105	0,280
17,701	538,290	537,0	539,1	0,0	104,2	103,0	0,000	0,173	0,181	106	0,274
17,815	538,309	537,0	539,1	0,0	103,3	102,2	0,000	0,173	0,181	107	0,276
17,992	538,328	537,1	539,2	0,0	102,3	101,2	0,000	0,173	0,181	108	0,279
17,877	538,343	537,1	539,2	0,0	103,0	102,1	0,000	0,172	0,181	109	0,277
18,012	538,356	537,1	539,2	0,0	102,3	101,1	0,000	0,173	0,181	110	0,279
18,044	538,363	537,1	539,2	0,0	101,9	100,8	0,000	0,173	0,181	111	0,280
18,047	538,377	537,2	539,3	0,0	101,9	101,0	0,000	0,172	0,181	112	0,280
17,928	538,391	537,2	539,3	0,0	102,3	101,3	0,000	0,172	0,181	113	0,278
17,805	538,389	537,2	539,3	0,0	103,2	102,0	0,000	0,172	0,180	114	0,276
17,810	538,407	537,2	539,4	0,0	103,3	102,2	0,000	0,172	0,181	115	0,276
17,926	538,420	537,3	539,4	0,0	102,5	101,4	0,000	0,172	0,181	116	0,278
17,981	538,398	537,3	539,4	0,0	102,2	101,3	0,000	0,172	0,181	117	0,279
18,044	538,388	537,4	539,4	0,0	101,8	100,8	0,000	0,172	0,181	118	0,280
18,164	538,357	537,4	539,4	0,0	100,9	100,2	0,000	0,172	0,181	119	0,282
18,139	538,356	537,4	539,4	0,0	101,4	100,5	0,000	0,172	0,181	120	0,281
18,046	538,352	537,4	539,4	0,0	101,9	100,7	0,000	0,172	0,181	121	0,280
17,985	538,370	537,4	539,4	0,0	102,1	101,2	0,000	0,172	0,181	122	0,279
17,933	538,360	537,4	539,4	0,0	102,4	101,5	0,000	0,172	0,181	123	0,278
17,848	538,372	537,4	539,4	0,0	103,1	102,2	0,000	0,172	0,181	124	0,277
18,048	538,373	537,4	539,4	0,0	101,8	100,8	0,000	0,172	0,181	125	0,280
17,812	538,386	537,4	539,5	0,0	103,3	102,2	0,000	0,172	0,181	126	0,276
17,949	538,410	537,4	539,5	0,0	102,4	101,4	0,000	0,172	0,181	127	0,278
18,169	538,426	537,4	539,6	0,0	101,2	100,2	0,000	0,172	0,181	128	0,282
17,933	538,462	537,5	539,6	0,0	102,5	101,6	0,000	0,172	0,181	129	0,278
17,933	538,511	537,5	539,6	0,0	102,4	101,7	0,000	0,172	0,181	130	0,278
18,054	538,513	537,5	539,6	0,0	101,9	101,0	0,000	0,172	0,181	131	0,280
17,938	538,522	537,6	539,6	0,0	102,5	101,5	0,000	0,172	0,181	132	0,278
17,810	538,574	537,6	539,7	0,0	103,1	102,0	0,000	0,172	0,181	133	0,276
18,074	538,527	537,6	539,7	0,0	101,7	100,5	0,000	0,172	0,180	134	0,280
18,048	538,536	537,6	539,6	0,0	101,7	100,9	0,000	0,172	0,181	135	0,280
17,927	538,527	537,6	539,7	0,0	102,4	101,4	0,000	0,172	0,181	136	0,278
18,042	538,526	537,6	539,7	0,0	101,7	100,6	0,000	0,172	0,180	137	0,280
18,045	538,525	537,6	539,7	0,0	101,8	100,6	0,000	0,172	0,180	138	0,280
17,868	538,493	537,6	539,8	0,0	102,9	101,8	0,000	0,172	0,181	139	0,277
17,986	538,498	537,8	539,8	0,0	102,1	100,8	0,000	0,172	0,180	140	0,279
17,815	538,497	537,8	539,8	0,0	103,1	102,2	0,000	0,172	0,180	141	0,276
17,810	538,497	537,8	539,8	0,0	103,1	101,9	0,000	0,172	0,181	142	0,276
17,871	538,508	537,8	539,8	0,0	102,9	101,7	0,000	0,172	0,180	143	0,277
18,020	538,527	537,8	539,8	0,0	101,8	100,8	0,000	0,172	0,181	144	0,280
17,808	538,541	537,8	539,8	0,0	103,0	102,0	0,000	0,172	0,180	145	0,276
18,040	538,555	537,8	539,8	0,0	101,8	100,7	0,000	0,172	0,181	146	0,280
17,984	538,537	537,8	539,8	0,0	102,0	101,0	0,000	0,172	0,181	147	0,279
18,101	538,541	537,8	539,9	0,0	101,3	100,5	0,000	0,172	0,181	148	0,281
18,098	538,538	537,9	539,9	0,0	101,5	100,4	0,000	0,172	0,181	149	0,281
17,922	538,540	537,9	539,9	0,0	102,2	101,4	0,000	0,172	0,181	150	0,278
17,921	538,537	537,9	539,9	0,0	102,2	101,3	0,000	0,172	0,181	151	0,278
18,102	538,551	537,9	539,9	0,0	101,5	100,3	0,000	0,172	0,180	152	0,281
18,100	538,544	537,9	540,0	0,0	101,3	100,1	0,000	0,172	0,180	153	0,281
18,048	538,545	538,0	540,0	0,0	101,5	100,6	0,000	0,172	0,180	154	0,280
18,043	538,551	537,9	540,0	0,0	101,8	100,7	0,000	0,172	0,181	155	0,280
17,862	538,533	537,9	540,0	0,0	102,7	101,8	0,000	0,172	0,181	156	0,277
17,804	538,538	537,9	540,0	0,0	103,2	101,9	0,000	0,172	0,180	157	0,276
17,806	538,540	537,9	540,0	0,0	103,0	101,9	0,000	0,172	0,180	158	0,276
18,158	538,530	537,9	540,0	0,0	101,1	100,0	0,000	0,172	0,180	159	0,282
17,805	460,000	537,9	540,0	0,0	103,1	102,3	0,000	0,172	0,181	160	0,276

Average	Average	Average	Average								Average
17,80	Inlet +	Inlet +	Inlet +								0,279
	Outlet	Outlet	Outlet	Average	Average	Average	# 1st Hr	#1	#2		
Tunnel	Temp.	Temp.	Temp.	97,90	100,53	98,72	System 1st Hr	System 1	System 2		SQRT
Velocity	Meter 1st Hr	Meter 1	Meter 2	Proportional Rates			Vol.Std.	Vol.Std.	Vol.Std.		Delta-P
				PR1at hour	PR1	PR2				Time	
Ft/Sec	Deg. R	Deg. R	Deg. R	%	%	%	(ft3)	(ft3)	(ft3)	min	(In H2O)2
18,106	536,273	535,1	535,3				0,182	0,181	0,185	0	0,278
17,730	536,328	535,1	535,4	98,6	101,5	100,0	0,182	0,181	0,186	1	0,277
17,577	536,349	535,1	535,4	98,9	102,3	100,5	0,182	0,180	0,185	2	0,275
17,648	536,354	535,1	535,5	98,7	101,7	100,3	0,182	0,180	0,186	3	0,276
17,605	536,385	535,1	535,6	99,2	102,2	100,6	0,182	0,180	0,186	4	0,275
17,611	536,418	535,1	535,6	98,5	101,6	100,0	0,182	0,180	0,185	5	0,276
17,798	536,432	535,1	535,8	97,2	100,5	99,0	0,182	0,181	0,186	6	0,279
17,704	536,461	535,1	535,9	97,8	101,0	99,4	0,182	0,181	0,186	7	0,278
17,757	536,464	535,2	535,9	97,4	100,6	99,0	0,182	0,181	0,186	8	0,279
17,565	536,444	535,2	536,0	98,4	101,7	99,9	0,182	0,181	0,186	9	0,276
17,497	536,422	535,2	536,1	98,8	102,4	100,0	0,182	0,181	0,185	10	0,275
17,571	536,373	535,3	536,2	98,3	101,6	100,1	0,182	0,181	0,186	11	0,276
17,503	536,342	535,3	536,3	98,6	101,8	100,1	0,182	0,181	0,186	12	0,275
17,639	536,338	535,3	536,4	98,1	101,2	99,4	0,182	0,181	0,185	13	0,277
17,696	536,333	535,4	536,5	97,7	101,1	99,2	0,182	0,181	0,185	14	0,278
17,695	536,310	535,4	536,6	97,8	100,8	99,4	0,182	0,181	0,186	15	0,278
17,645	536,314	535,4	536,7	98,1	101,0	99,6	0,182	0,180	0,186	16	0,277
17,644	536,308	535,4	536,8	98,1	101,3	99,5	0,182	0,180	0,186	17	0,277
17,703	536,292	535,5	536,9	97,8	100,8	99,2	0,182	0,181	0,185	18	0,278
17,643	536,302	535,5	536,9	98,0	101,4	99,6	0,182	0,181	0,186	19	0,277
17,704	536,291	535,5	537,0	97,8	100,9	99,4	0,182	0,181	0,186	20	0,278
17,702	536,272	535,5	537,1	97,7	101,0	98,9	0,182	0,181	0,185	21	0,278
17,589	536,274	535,5	537,1	98,4	101,6	99,8	0,182	0,181	0,185	22	0,276
17,525	536,257	535,6	537,2	98,7	102,0	100,2	0,182	0,181	0,185	23	0,275
17,821	536,243	535,6	537,3	97,2	100,3	98,6	0,182	0,181	0,186	24	0,280
17,682	536,221	535,6	537,4	97,0	100,1	98,5	0,182	0,181	0,186	25	0,281
17,699	536,234	535,6	537,4	97,9	100,9	99,1	0,182	0,181	0,186	26	0,278
17,586	536,247	535,6	537,5	98,5	101,6	100,0	0,182	0,181	0,186	27	0,276
17,698	536,222	535,6	537,6	97,9	100,9	99,2	0,182	0,181	0,186	28	0,278
17,633	536,198	535,7	537,7	98,0	101,1	99,5	0,182	0,181	0,186	29	0,277
17,683	536,170	535,7	537,7	97,9	100,8	99,1	0,182	0,181	0,186	30	0,278
17,596	536,177	535,8	537,7	98,2	101,4	99,7	0,182	0,181	0,185	31	0,276
17,694	536,175	535,8	537,8	97,7	100,8	99,0	0,182	0,180	0,185	32	0,278
17,623	536,186	535,8	537,9	98,0	101,1	99,3	0,182	0,180	0,185	33	0,277
17,619	536,213	535,8	537,9	97,9	101,2	99,4	0,182	0,181	0,185	34	0,277
17,836	536,241	535,8	538,0	96,8	99,9	98,2	0,182	0,181	0,185	35	0,281
17,559	536,253	535,8	538,0	98,2	101,4	99,8	0,182	0,181	0,186	36	0,276
17,744	536,269	535,8	538,1	97,4	100,6	98,8	0,182	0,181	0,186	37	0,279
17,801	536,284	535,9	538,2	97,1	100,1	98,2	0,182	0,181	0,185	38	0,280
17,684	536,304	535,9	538,2	97,6	100,8	99,0	0,182	0,181	0,185	39	0,278
17,624	536,306	535,9	538,3	98,0	101,1	99,1	0,182	0,181	0,185	40	0,277
17,646	536,319	535,9	538,3	97,9	101,1	98,9	0,182	0,181	0,185	41	0,277
17,687	536,332	536,0	538,3	97,7	100,8	99,0	0,182	0,181	0,185	42	0,278
17,807	536,357	536,0	538,4	97,1	100,0	98,1	0,182	0,180	0,185	43	0,280
17,808	536,378	536,0	538,4	97,1	100,2	98,2	0,182	0,180	0,185	44	0,280
17,834	536,374	536,0	538,5	97,2	100,4	98,2	0,182	0,181	0,185	45	0,280
17,578	536,355	536,0	538,5	98,3	101,6	99,6	0,182	0,181	0,185	46	0,276
17,571	536,348	536,1	538,5	98,3	101,3	99,1	0,182	0,180	0,185	47	0,276
17,772	536,353	536,1	538,6	97,2	100,3	98,4	0,182	0,180	0,185	48	0,279
17,522	536,363	536,1	538,6	98,8	101,9	99,9	0,182	0,180	0,185	49	0,275
17,807	536,404	536,2	538,7	97,1	100,3	98,3	0,182	0,181	0,185	50	0,280
17,693	536,449	536,2	538,8	97,7	100,8	99,0	0,182	0,181	0,185	51	0,278
17,638	536,436	536,2	538,8	98,0	101,2	99,0	0,182	0,181	0,185	52	0,277
17,646	536,454	536,2	538,9	98,1	101,2	99,7	0,182	0,181	0,185	53	0,277
17,696	536,458	536,2	538,9	97,8	100,8	99,0	0,182	0,181	0,185	54	0,278
17,640	536,470	536,3	539,0	98,1	101,2	99,3	0,182	0,181	0,185	55	0,277
17,700	536,467	536,3	539,0	97,7	100,8	98,8	0,182	0,181	0,185	56	0,278
17,699	536,495	536,3	539,0	97,7	100,8	99,0	0,182	0,180	0,185	57	0,278
17,578	536,516	536,4	539,1	98,4	101,4	99,4	0,182	0,180	0,185	58	0,276
17,929	536,510	536,4	539,1	96,4	99,5	97,7	0,182	0,180	0,185	59	0,282
17,933	536,433	536,4	539,2	0,0	99,5	97,8	0,000	0,180	0,185	60	0,282
17,703	536,372	536,4	539,2	0,0	101,0	99,1	0,000	0,181	0,185	61	0,278
17,715	536,338	536,4	539,2	0,0	101,0	99,0	0,000	0,181	0,185	62	0,278
17,706	536,338	536,5	539,2	0,0	100,7	99,0	0,000	0,180	0,185	63	0,278
17,705	536,322	536,5	539,1	0,0	100,9	99,1	0,000	0,180	0,185	64	0,278
17,822	536,327	536,6	539,1	0,0	100,2	98,6	0,000	0,181	0,185	65	0,280
17,590	536,331	536,6	539,0	0,0	101,7	99,6	0,000	0,181	0,185	66	0,276
17,597	536,324	536,6	539,0	0,0	101,6	99,6	0,000	0,181	0,185	67	0,276
17,824	536,336	536,6	539,0	0,0	100,4	98,5	0,000	0,181	0,185	68	0,280
17,698	536,341	536,6	539,0	0,0	100,0	98,3	0,000	0,181	0,185	69	0,281
17,841	536,356	536,6	539,0	0,0	100,3	98,5	0,000	0,180	0,185	70	0,280
17,830	536,361	536,7	539,0	0,0	100,6	98,5	0,000	0,181	0,185	71	0,280
17,613	536,361	536,7	539,0	0,0	101,6	99,7	0,000	0,181	0,185	72	0,276
17,775	536,373	536,7	539,0	0,0	100,7	98,9	0,000	0,181	0,185	73	0,279
17,787	536,370	536,7	539,0	0,0	100,7	98,9	0,000	0,181	0,185	74	0,279
17,725	536,403	536,7	539,0	0,0	101,1	99,2	0,000	0,181	0,185	75	0,278
17,726	536,402	536,8	539,1	0,0	101,0	99,3	0,000	0,181	0,185	76	0,278
17,668	536,410	536,8	539,1	0,0	101,5	99,4	0,000	0,181	0,185	77	0,277
17,620	536,424	536,8	539,1	0,0	101,9	99,8	0,000	0,181	0,185	78	0,276

17,848	536,427	536,8	539,1	0,0	100,5	98,7	0,000	0,181	0,185	79	0,280
17,679	536,443	536,9	539,1	0,0	101,5	99,6	0,000	0,181	0,185	80	0,277
17,744	536,470	536,9	539,2	0,0	101,2	99,1	0,000	0,181	0,185	81	0,278
17,758	536,476	536,9	539,2	0,0	101,0	99,1	0,000	0,181	0,185	82	0,278
17,630	536,508	536,9	539,2	0,0	101,8	99,8	0,000	0,181	0,185	83	0,276
17,693	536,514	536,9	539,2	0,0	101,6	99,5	0,000	0,181	0,185	84	0,277
17,860	536,535	537,0	539,2	0,0	100,5	98,6	0,000	0,181	0,185	85	0,280
17,696	536,554	537,0	539,3	0,0	101,6	99,6	0,000	0,181	0,185	86	0,277
17,751	536,559	537,1	539,3	0,0	101,0	99,1	0,000	0,181	0,185	87	0,278
17,868	536,590	537,2	539,4	0,0	100,6	98,7	0,000	0,180	0,185	88	0,280
17,808	536,593	537,2	539,4	0,0	100,8	99,0	0,000	0,181	0,185	89	0,279
17,637	536,627	537,2	539,4	0,0	101,7	99,9	0,000	0,180	0,185	90	0,276
17,641	536,648	537,2	539,4	0,0	102,0	99,7	0,000	0,180	0,185	91	0,276
17,704	536,669	537,2	539,4	0,0	101,6	99,7	0,000	0,181	0,185	92	0,277
17,824	536,678	537,2	539,4	0,0	100,7	98,9	0,000	0,180	0,185	93	0,279
17,590	536,704	537,2	539,4	0,0	102,2	100,5	0,000	0,180	0,185	94	0,275
17,693	536,724	537,2	539,4	0,0	102,0	100,0	0,000	0,180	0,185	95	0,276
17,713	536,725	537,2	539,5	0,0	101,6	99,8	0,000	0,181	0,185	96	0,277
17,827	536,751	537,2	539,5	0,0	101,2	99,0	0,000	0,181	0,185	97	0,279
17,676	536,755	537,3	539,5	0,0	101,8	99,9	0,000	0,181	0,185	98	0,277
17,767	536,790	537,3	539,5	0,0	101,4	99,4	0,000	0,181	0,185	99	0,278
17,885	536,798	537,3	539,5	0,0	100,6	98,6	0,000	0,181	0,185	100	0,280
17,650	536,814	537,3	539,6	0,0	101,8	99,8	0,000	0,180	0,185	101	0,276
17,772	536,843	537,4	539,6	0,0	101,2	99,4	0,000	0,180	0,185	102	0,278
17,948	536,866	537,4	539,6	0,0	100,1	98,3	0,000	0,180	0,185	103	0,281
17,716	536,900	537,4	539,7	0,0	101,5	99,6	0,000	0,180	0,185	104	0,277
17,905	536,923	537,4	539,7	0,0	100,4	98,8	0,000	0,180	0,185	105	0,280
17,724	536,921	537,5	539,7	0,0	101,7	99,5	0,000	0,180	0,185	106	0,277
17,663	536,941	537,5	539,7	0,0	101,8	100,0	0,000	0,180	0,185	107	0,276
17,550	536,970	537,6	539,7	0,0	102,6	100,7	0,000	0,180	0,185	108	0,274
17,728	536,972	537,6	539,7	0,0	101,4	99,7	0,000	0,180	0,185	109	0,277
17,786	536,993	537,5	539,7	0,0	101,2	99,3	0,000	0,180	0,185	110	0,278
17,733	537,012	537,5	539,7	0,0	101,7	99,7	0,000	0,180	0,185	111	0,277
17,900	537,014	537,5	539,7	0,0	100,6	98,6	0,000	0,180	0,185	112	0,280
17,901	537,040	537,7	539,7	0,0	100,6	98,6	0,000	0,180	0,185	113	0,280
17,784	537,049	537,7	539,8	0,0	101,2	99,2	0,000	0,180	0,185	114	0,278
17,965	537,057	537,7	539,8	0,0	100,3	98,6	0,000	0,180	0,185	115	0,281
17,678	537,090	537,7	539,8	0,0	101,8	100,2	0,000	0,180	0,185	116	0,276
17,850	537,100	537,8	539,8	0,0	100,9	99,0	0,000	0,180	0,185	117	0,279
17,908	537,113	537,7	539,8	0,0	100,7	98,8	0,000	0,180	0,185	118	0,280
17,673	537,148	537,8	539,8	0,0	102,0	100,1	0,000	0,180	0,185	119	0,276
17,675	537,166	537,8	539,8	0,0	101,9	99,9	0,000	0,180	0,185	120	0,276
18,025	537,201	537,8	539,9	0,0	99,7	97,9	0,000	0,180	0,185	121	0,282
17,966	537,210	537,8	539,9	0,0	100,1	98,7	0,000	0,180	0,185	122	0,281
17,909	537,223	537,8	539,9	0,0	100,5	98,7	0,000	0,180	0,185	123	0,280
17,850	537,267	537,8	539,9	0,0	100,8	99,0	0,000	0,180	0,185	124	0,279
17,728	537,282	537,9	540,0	0,0	101,6	99,8	0,000	0,180	0,185	125	0,277
17,904	537,295	537,8	540,0	0,0	100,7	98,7	0,000	0,180	0,185	126	0,280
17,692	537,317	537,9	540,0	0,0	101,7	100,0	0,000	0,180	0,185	127	0,277
17,673	537,326	537,9	540,0	0,0	101,8	100,1	0,000	0,180	0,185	128	0,276
17,731	537,355	537,9	540,0	0,0	101,5	99,7	0,000	0,180	0,185	129	0,277
17,791	537,376	538,0	540,1	0,0	100,9	99,1	0,000	0,180	0,185	130	0,278
17,913	537,383	538,0	540,1	0,0	100,5	98,5	0,000	0,180	0,184	131	0,280
17,908	537,405	538,0	540,1	0,0	100,5	98,7	0,000	0,180	0,185	132	0,280
17,962	537,426	538,0	540,1	0,0	100,3	98,5	0,000	0,180	0,185	133	0,281
17,901	537,463	538,1	540,2	0,0	100,3	98,8	0,000	0,180	0,185	134	0,280
17,959	537,502	538,1	540,2	0,0	100,1	98,6	0,000	0,180	0,185	135	0,281
17,667	537,543	538,1	540,2	0,0	101,8	99,8	0,000	0,180	0,185	136	0,276
17,788	537,573	538,2	540,3	0,0	101,1	99,5	0,000	0,180	0,185	137	0,278
17,782	537,601	538,2	540,3	0,0	100,9	99,3	0,000	0,180	0,185	138	0,278
18,079	537,623	538,2	540,3	0,0	99,5	97,7	0,000	0,180	0,185	139	0,283
17,677	537,640	538,2	540,4	0,0	101,9	100,1	0,000	0,180	0,185	140	0,276
17,873	537,659	538,2	540,4	0,0	100,6	98,8	0,000	0,180	0,185	141	0,279
17,793	537,683	538,3	540,4	0,0	101,3	99,3	0,000	0,180	0,185	142	0,278
17,736	537,700	538,3	540,4	0,0	101,4	99,4	0,000	0,180	0,185	143	0,277
17,911	537,715	538,5	540,5	0,0	100,4	98,6	0,000	0,180	0,185	144	0,280
18,088	537,754	538,5	540,5	0,0	99,9	97,9	0,000	0,180	0,185	145	0,283
17,908	537,768	538,6	540,6	0,0	100,5	98,6	0,000	0,180	0,185	146	0,280
18,084	537,770	538,6	540,6	0,0	99,3	97,6	0,000	0,180	0,185	147	0,283
17,739	537,818	538,6	540,6	0,0	101,4	99,4	0,000	0,180	0,184	148	0,277
17,559	537,809	538,6	540,6	0,0	102,5	100,7	0,000	0,180	0,185	149	0,274
17,918	537,829	538,6	540,6	0,0	100,3	98,7	0,000	0,180	0,185	150	0,280
17,817	537,866	538,6	540,6	0,0	100,9	99,2	0,000	0,180	0,185	151	0,278
17,854	537,882	538,6	540,6	0,0	100,7	99,1	0,000	0,180	0,185	152	0,279
17,912	537,906	538,6	540,6	0,0	100,5	98,7	0,000	0,180	0,185	153	0,280
17,908	537,926	538,6	540,6	0,0	100,5	98,6	0,000	0,180	0,185	154	0,280
17,968	537,966	538,6	540,7	0,0	100,2	98,2	0,000	0,180	0,185	155	0,281
17,799	538,006	538,7	540,7	0,0	101,3	99,4	0,000	0,180	0,185	156	0,278
17,796	538,029	538,8	540,8	0,0	101,1	99,2	0,000	0,180	0,185	157	0,278
17,922	538,066	538,8	540,8	0,0	100,4	98,9	0,000	0,180	0,185	158	0,280
17,624	538,092	538,8	540,8	0,0	102,3	100,3	0,000	0,180	0,185	159	0,275
17,808	538,123	538,8	540,8	0,0	100,9	99,5	0,000	0,180	0,185	160	0,278
17,923	538,120	538,8	540,8	0,0	100,4	98,5	0,000	0,180	0,185	161	0,280
17,802	538,151	538,8	540,8	0,0	101,2	99,1	0,000	0,180	0,184	162	0,278
17,983	538,159	538,8	540,8	0,0	100,0	98,1	0,000	0,180	0,184	163	0,281
17,739	538,175	538,9	540,9	0,0	101,4	99,6	0,000	0,180	0,184	164	0,277

17,744	538,196	538,9	540,9	0,0	101,4	99,6	0,000	0,180	0,185	165	0,277
17,684	538,216	538,9	540,9	0,0	101,7	99,7	0,000	0,180	0,184	166	0,276
18,001	538,244	538,9	540,9	0,0	99,7	98,3	0,000	0,180	0,185	167	0,281
17,665	538,258	538,9	540,9	0,0	100,6	98,6	0,000	0,180	0,185	168	0,279
18,095	538,294	538,9	540,9	0,0	99,5	97,7	0,000	0,180	0,185	169	0,283
18,043	538,332	539,0	541,0	0,0	99,7	98,0	0,000	0,180	0,185	170	0,282
17,800	538,345	539,0	541,0	0,0	100,9	99,2	0,000	0,180	0,185	171	0,278
17,971	538,357	539,0	541,0	0,0	100,0	98,2	0,000	0,180	0,184	172	0,281
17,683	538,377	539,0	541,0	0,0	102,0	99,9	0,000	0,180	0,185	173	0,276
17,971	538,393	539,0	541,0	0,0	100,1	98,7	0,000	0,180	0,185	174	0,281
17,864	538,425	539,0	541,0	0,0	100,9	99,0	0,000	0,180	0,185	175	0,279
18,155	538,436	539,0	541,1	0,0	99,3	97,3	0,000	0,180	0,185	176	0,284
18,002	538,477	539,0	541,1	0,0	99,9	98,1	0,000	0,180	0,184	177	0,281
17,920	538,482	539,1	541,1	0,0	100,3	98,6	0,000	0,180	0,185	178	0,280
18,132	538,504	539,1	541,2	0,0	99,4	97,5	0,000	0,180	0,185	179	0,283
17,804	538,541	539,1	541,2	0,0	101,0	99,3	0,000	0,180	0,185	180	0,278
17,921	538,545	539,2	541,2	0,0	100,4	98,7	0,000	0,180	0,185	181	0,280
17,977	538,583	539,3	541,3	0,0	99,9	98,2	0,000	0,180	0,185	182	0,281
17,974	538,611	539,3	541,3	0,0	100,0	98,2	0,000	0,180	0,184	183	0,281
17,987	538,623	539,3	541,3	0,0	100,0	98,0	0,000	0,180	0,184	184	0,281
17,740	538,654	539,3	541,3	0,0	101,4	99,6	0,000	0,180	0,184	185	0,277
17,856	538,682	539,3	541,4	0,0	100,8	98,9	0,000	0,180	0,185	186	0,279
17,741	538,706	539,3	541,4	0,0	101,2	99,4	0,000	0,180	0,184	187	0,277
17,923	538,716	539,4	541,4	0,0	100,5	98,6	0,000	0,180	0,185	188	0,280
17,737	538,738	539,5	541,4	0,0	101,5	99,6	0,000	0,180	0,185	189	0,277
17,827	538,769	539,5	541,5	0,0	100,8	98,8	0,000	0,180	0,185	190	0,279
17,796	538,799	539,5	541,5	0,0	101,1	99,1	0,000	0,180	0,184	191	0,278
17,793	538,807	539,5	541,5	0,0	101,0	99,2	0,000	0,180	0,184	192	0,278
17,919	538,829	539,5	541,5	0,0	100,4	98,5	0,000	0,180	0,185	193	0,280
17,971	538,842	539,5	541,5	0,0	100,0	98,2	0,000	0,180	0,185	194	0,281
17,849	538,864	539,5	541,5	0,0	100,6	98,9	0,000	0,180	0,185	195	0,279
17,848	538,895	539,6	541,5	0,0	100,7	98,7	0,000	0,180	0,184	196	0,279
17,975	538,913	539,5	541,5	0,0	99,8	98,2	0,000	0,180	0,184	197	0,281
18,140	538,936	539,6	541,5	0,0	99,0	97,0	0,000	0,180	0,184	198	0,284
17,788	538,949	539,6	541,5	0,0	101,1	99,0	0,000	0,180	0,184	199	0,278
17,788	538,980	539,6	541,5	0,0	100,9	99,1	0,000	0,180	0,184	200	0,278
17,790	538,988	539,6	541,6	0,0	100,9	99,3	0,000	0,180	0,185	201	0,278
17,674	539,023	539,7	541,6	0,0	101,6	99,8	0,000	0,180	0,185	202	0,276
17,788	539,035	539,7	541,7	0,0	100,8	99,1	0,000	0,180	0,184	203	0,278
17,778	539,046	539,8	541,7	0,0	100,8	99,2	0,000	0,180	0,185	204	0,278
17,904	539,071	539,8	541,7	0,0	100,1	98,4	0,000	0,179	0,185	205	0,280
18,021	539,112	539,8	541,7	0,0	99,8	97,7	0,000	0,180	0,184	206	0,282
17,612	539,129	539,8	541,7	0,0	101,8	99,8	0,000	0,180	0,184	207	0,275
17,724	539,154	539,8	541,8	0,0	101,3	99,4	0,000	0,180	0,184	208	0,277
17,777	539,167	539,8	541,8	0,0	100,8	98,9	0,000	0,180	0,184	209	0,278
17,778	539,192	539,9	541,8	0,0	100,7	99,0	0,000	0,180	0,184	210	0,278
17,901	539,202	539,9	541,9	0,0	99,9	98,3	0,000	0,179	0,184	211	0,280
17,662	539,219	540,0	541,9	0,0	101,6	99,8	0,000	0,180	0,184	212	0,276
17,657	539,259	540,0	541,9	0,0	101,3	99,8	0,000	0,180	0,185	213	0,276
18,018	539,274	540,0	541,9	0,0	99,6	97,9	0,000	0,180	0,185	214	0,282
18,014	539,313	540,0	542,0	0,0	99,7	97,8	0,000	0,180	0,185	215	0,282
17,960	539,327	539,9	542,0	0,0	99,9	98,2	0,000	0,180	0,185	216	0,281
18,014	539,351	539,9	542,0	0,0	99,5	97,8	0,000	0,180	0,185	217	0,282
17,778	539,371	539,9	542,0	0,0	100,8	99,0	0,000	0,180	0,184	218	0,278
17,778	539,373	540,0	542,1	0,0	100,7	98,9	0,000	0,180	0,184	219	0,278
17,662	539,394	540,0	542,1	0,0	101,5	99,5	0,000	0,180	0,184	220	0,276
18,186	539,415	540,1	542,1	0,0	98,5	96,8	0,000	0,180	0,184	221	0,284
18,093	539,443	540,1	542,1	0,0	99,1	97,3	0,000	0,180	0,184	222	0,283
17,832	539,468	540,1	542,1	0,0	100,4	98,7	0,000	0,180	0,184	223	0,279
17,830	539,484	540,1	542,1	0,0	100,4	98,8	0,000	0,180	0,185	224	0,279
17,991	539,502	540,1	542,1	0,0	99,5	97,5	0,000	0,180	0,184	225	0,281
17,774	539,509	540,2	542,2	0,0	100,8	98,7	0,000	0,180	0,184	226	0,278
17,946	539,525	540,2	542,2	0,0	99,6	98,1	0,000	0,180	0,184	227	0,281
17,806	539,555	540,2	542,2	0,0	100,3	99,1	0,000	0,179	0,185	228	0,279
17,945	539,589	540,2	542,2	0,0	99,6	97,9	0,000	0,179	0,185	229	0,281
17,711	539,628	540,1	542,2	0,0	101,0	99,5	0,000	0,180	0,185	230	0,277
18,002	539,627	540,2	542,3	0,0	99,2	97,6	0,000	0,179	0,185	231	0,282
17,820	539,646	540,3	542,3	0,0	100,1	98,5	0,000	0,179	0,184	232	0,279
17,818	539,669	540,3	542,3	0,0	100,3	98,6	0,000	0,179	0,184	233	0,279
17,929	539,674	540,3	542,3	0,0	99,7	97,9	0,000	0,180	0,185	234	0,281
17,938	539,720	540,3	542,3	0,0	99,6	98,0	0,000	0,180	0,184	235	0,281
18,112	539,717	540,3	542,3	0,0	98,7	96,9	0,000	0,179	0,184	236	0,284
17,700	539,748	540,3	542,3	0,0	100,9	99,3	0,000	0,179	0,184	237	0,277
17,936	539,773	540,3	542,4	0,0	99,6	97,9	0,000	0,179	0,184	238	0,281
17,937	539,777	540,4	542,4	0,0	99,5	97,8	0,000	0,179	0,184	239	0,281
17,934	539,805	540,4	542,4	0,0	99,7	97,7	0,000	0,179	0,184	240	0,281
18,107	539,815	540,5	542,4	0,0	98,8	97,0	0,000	0,180	0,184	241	0,284
18,049	539,829	540,5	542,4	0,0	99,2	97,1	0,000	0,180	0,184	242	0,283
18,052	539,875	540,5	542,5	0,0	98,9	97,2	0,000	0,180	0,184	243	0,283
17,855	539,879	540,6	542,5	0,0	99,9	98,0	0,000	0,179	0,184	244	0,280
17,935	539,911	540,6	542,5	0,0	99,6	97,6	0,000	0,179	0,184	245	0,281
17,760	539,936	540,6	542,5	0,0	100,4	98,6	0,000	0,179	0,184	246	0,278
17,708	539,953	540,6	542,5	0,0	101,0	98,9	0,000	0,179	0,184	247	0,277
17,758	539,973	540,6	542,5	0,0	100,5	98,5	0,000	0,180	0,184	248	0,278
17,936	539,970	540,6	542,5	0,0	99,7	97,7	0,000	0,179	0,184	249	0,281
17,759	539,987	540,7	542,6	0,0	100,7	98,5	0,000	0,180	0,184	250	0,278

18,105	539,984	540,8	542,6	0,0	98,6	96,8	0,000	0,180	0,184	251	0,284
17,756	540,014	540,8	542,6	0,0	100,5	98,6	0,000	0,179	0,184	252	0,278
17,934	540,015	540,9	542,6	0,0	99,6	97,5	0,000	0,179	0,184	253	0,281
17,929	540,041	540,8	542,6	0,0	99,5	97,7	0,000	0,179	0,184	254	0,281
18,021	540,038	540,8	542,6	0,0	99,0	97,4	0,000	0,179	0,184	255	0,282
18,005	540,060	540,8	542,6	0,0	99,0	97,4	0,000	0,179	0,184	256	0,282
17,924	540,074	540,8	542,7	0,0	99,5	97,9	0,000	0,179	0,184	257	0,281
17,989	540,093	540,8	542,7	0,0	99,2	97,3	0,000	0,179	0,184	258	0,282
17,990	540,108	540,7	542,7	0,0	99,0	97,3	0,000	0,179	0,184	259	0,282
17,757	540,113	540,7	542,7	0,0	100,8	98,9	0,000	0,179	0,184	260	0,278
17,892	540,143	540,8	542,7	0,0	100,8	99,3	0,000	0,180	0,185	261	0,277
17,971	540,180	540,8	542,8	0,0	99,1	97,6	0,000	0,179	0,184	262	0,282
17,927	540,171	540,8	542,7	0,0	99,6	97,8	0,000	0,179	0,184	263	0,281
17,868	540,181	540,8	542,8	0,0	99,7	97,9	0,000	0,179	0,184	264	0,280
17,911	540,222	540,9	542,8	0,0	99,7	97,7	0,000	0,179	0,184	265	0,281
17,985	540,215	540,9	542,8	0,0	99,2	97,1	0,000	0,179	0,184	266	0,282
17,987	540,224	540,9	542,8	0,0	99,2	97,2	0,000	0,179	0,184	267	0,282
18,042	540,242	540,8	542,8	0,0	99,1	97,3	0,000	0,180	0,184	268	0,283
17,766	540,259	540,8	542,8	0,0	100,4	98,7	0,000	0,180	0,184	269	0,278
17,693	540,275	540,9	542,9	0,0	100,9	98,8	0,000	0,179	0,184	270	0,277
17,741	540,284	540,9	542,9	0,0	100,4	98,7	0,000	0,179	0,184	271	0,278
17,911	540,293	541,0	542,9	0,0	99,5	97,7	0,000	0,179	0,184	272	0,281
17,867	540,289	541,0	543,0	0,0	99,7	98,2	0,000	0,179	0,184	273	0,280
17,748	540,308	541,0	543,0	0,0	100,5	98,5	0,000	0,179	0,184	274	0,278
17,865	540,291	541,1	543,0	0,0	99,8	98,2	0,000	0,179	0,184	275	0,280
17,923	540,297	541,1	542,9	0,0	99,5	97,5	0,000	0,179	0,184	276	0,281
17,832	540,283	541,1	542,9	0,0	101,1	99,5	0,000	0,179	0,184	277	0,276
17,751	540,268	541,0	542,9	0,0	100,5	98,8	0,000	0,179	0,184	278	0,278
17,833	540,253	541,0	542,9	0,0	101,2	99,1	0,000	0,179	0,184	279	0,276
17,871	540,243	540,9	542,8	0,0	100,9	99,0	0,000	0,179	0,184	280	0,277
17,927	540,245	540,8	542,8	0,0	99,5	97,8	0,000	0,179	0,184	281	0,281
17,984	540,224	540,8	542,8	0,0	99,0	97,4	0,000	0,179	0,184	282	0,282
17,748	540,219	540,8	542,7	0,0	100,3	98,6	0,000	0,179	0,184	283	0,278
17,776	540,204	540,7	542,7	0,0	100,2	98,7	0,000	0,179	0,184	284	0,279
17,891	540,192	540,7	542,6	0,0	100,9	99,0	0,000	0,179	0,184	285	0,277
17,924	540,203	540,6	542,6	0,0	99,4	97,6	0,000	0,179	0,184	286	0,281
17,866	540,185	540,6	542,6	0,0	99,9	98,1	0,000	0,179	0,184	287	0,280
17,831	540,180	540,5	542,6	0,0	101,2	99,6	0,000	0,179	0,184	288	0,276
17,748	540,165	540,5	542,6	0,0	100,5	98,8	0,000	0,179	0,184	289	0,278
17,806	540,169	540,5	542,5	0,0	100,2	98,5	0,000	0,180	0,184	290	0,279
17,950	540,150	540,5	542,5	0,0	99,3	97,6	0,000	0,179	0,184	291	0,281
17,921	540,138	540,5	542,5	0,0	99,5	97,7	0,000	0,179	0,184	292	0,281
17,745	540,127	540,4	542,5	0,0	100,5	98,6	0,000	0,179	0,184	293	0,278
17,745	540,112	540,4	542,4	0,0	100,5	98,6	0,000	0,179	0,184	294	0,278
17,746	540,119	540,4	542,4	0,0	100,5	98,7	0,000	0,179	0,184	295	0,278
17,685	540,097	540,4	542,4	0,0	101,0	99,1	0,000	0,180	0,184	296	0,277
17,772	540,076	540,4	542,4	0,0	100,5	98,4	0,000	0,180	0,184	297	0,279
17,684	540,072	540,4	542,4	0,0	100,9	99,0	0,000	0,180	0,184	298	0,277
17,849	540,068	540,4	542,4	0,0	99,9	98,1	0,000	0,180	0,184	299	0,280
17,862	540,055	540,4	542,4	0,0	99,8	97,9	0,000	0,179	0,184	300	0,280
17,860	540,058	540,4	542,4	0,0	99,9	98,2	0,000	0,179	0,184	301	0,280
17,800	540,045	540,4	542,4	0,0	100,2	98,3	0,000	0,180	0,184	302	0,279
17,975	540,016	540,4	542,4	0,0	99,2	97,2	0,000	0,180	0,184	303	0,282
17,858	540,020	540,4	542,3	0,0	100,0	98,0	0,000	0,180	0,184	304	0,280
17,974	540,014	540,4	542,3	0,0	99,2	97,3	0,000	0,180	0,184	305	0,282
17,803	539,997	540,4	542,4	0,0	100,2	98,4	0,000	0,179	0,184	306	0,279
17,888	539,974	540,5	542,4	0,0	99,7	98,2	0,000	0,179	0,185	307	0,280
17,914	539,955	540,6	542,4	0,0	99,5	97,7	0,000	0,179	0,184	308	0,281
17,856	539,953	540,6	542,4	0,0	99,8	98,3	0,000	0,179	0,184	309	0,280
17,856	539,932	540,6	542,4	0,0	99,9	98,1	0,000	0,180	0,185	310	0,280
17,621	539,926	540,6	542,4	0,0	100,9	99,6	0,000	0,179	0,184	311	0,276
17,679	539,914	540,5	542,4	0,0	100,7	99,0	0,000	0,179	0,184	312	0,277
17,739	539,922	540,5	542,4	0,0	100,4	98,8	0,000	0,179	0,184	313	0,278
17,738	539,918	540,5	542,4	0,0	100,4	99,0	0,000	0,179	0,185	314	0,278
17,855	539,902	540,5	542,4	0,0	100,0	98,3	0,000	0,180	0,185	315	0,280
17,678	539,907	540,5	542,4	0,0	100,9	99,1	0,000	0,180	0,185	316	0,277
17,643	539,902	540,4	542,3	0,0	101,2	99,2	0,000	0,180	0,184	317	0,277
17,736	539,889	540,4	542,3	0,0	100,4	99,0	0,000	0,180	0,184	318	0,278
17,854	539,877	540,4	542,3	0,0	99,9	97,9	0,000	0,180	0,184	319	0,280
18,026	539,881	540,4	542,3	0,0	98,8	96,9	0,000	0,180	0,184	320	0,283
17,677	539,860	540,4	542,3	0,0	100,8	99,1	0,000	0,179	0,184	321	0,277
17,854	539,870	540,4	542,3	0,0	99,9	97,9	0,000	0,180	0,184	322	0,280
17,609	539,846	540,4	542,3	0,0	101,0	99,4	0,000	0,179	0,184	323	0,276
17,911	539,836	540,4	542,3	0,0	99,6	97,6	0,000	0,179	0,184	324	0,281
17,851	539,813	540,4	542,3	0,0	99,7	98,0	0,000	0,179	0,184	325	0,280
17,774	539,807	540,3	542,2	0,0	100,4	98,3	0,000	0,180	0,184	326	0,279
17,794	539,783	540,3	542,2	0,0	100,0	98,5	0,000	0,180	0,184	327	0,279
17,911	539,760	540,2	542,2	0,0	99,3	97,4	0,000	0,179	0,184	328	0,281
17,853	539,743	540,2	542,2	0,0	100,0	98,0	0,000	0,180	0,184	329	0,280
17,911	539,714	540,2	542,2	0,0	99,5	97,7	0,000	0,180	0,184	330	0,281
17,853	539,702	540,2	542,2	0,0	99,9	98,1	0,000	0,180	0,184	331	0,280
17,697	539,690	540,2	542,2	0,0	100,7	98,8	0,000	0,180	0,184	332	0,277
17,620	539,652	540,2	542,2	0,0	101,2	99,3	0,000	0,180	0,184	333	0,276
17,737	539,664	540,2	542,1	0,0	100,5	98,8	0,000	0,180	0,184	334	0,278
17,854	539,670	540,2	542,1	0,0	99,9	97,8	0,000	0,180	0,184	335	0,280
17,619	539,634	540,2	542,2	0,0	101,2	99,1	0,000	0,180	0,184	336	0,276

18,028	539,632	540,2	542,1	0,0	98,9	97,0	0,000	0,180	0,184	337	0,283
17,737	539,619	540,2	542,1	0,0	100,6	98,6	0,000	0,180	0,184	338	0,278
17,977	539,607	540,2	542,1	0,0	99,0	97,5	0,000	0,179	0,184	339	0,282
17,737	539,588	540,1	542,1	0,0	100,4	98,5	0,000	0,179	0,184	340	0,278
17,736	539,589	540,1	542,1	0,0	100,6	98,6	0,000	0,180	0,184	341	0,278
17,856	539,570	540,1	542,1	0,0	99,8	98,0	0,000	0,180	0,184	342	0,280
17,911	539,551	540,1	542,1	0,0	99,6	97,8	0,000	0,180	0,184	343	0,281
17,737	539,541	540,1	542,1	0,0	100,5	98,9	0,000	0,180	0,184	344	0,278
17,900	539,538	540,1	542,1	0,0	99,4	98,0	0,000	0,179	0,185	345	0,281
18,028	539,528	540,1	542,1	0,0	98,9	97,2	0,000	0,179	0,185	346	0,283
17,735	539,530	540,1	542,1	0,0	100,7	98,7	0,000	0,180	0,184	347	0,278
17,677	539,502	540,1	542,1	0,0	100,8	98,9	0,000	0,180	0,184	348	0,277
17,911	539,494	540,1	542,0	0,0	99,6	97,6	0,000	0,180	0,184	349	0,281
17,910	539,485	540,0	542,0	0,0	99,6	97,7	0,000	0,180	0,184	350	0,281
17,914	539,489	540,0	542,0	0,0	99,5	98,0	0,000	0,180	0,184	351	0,281
18,026	539,461	540,0	542,0	0,0	98,9	97,2	0,000	0,180	0,185	352	0,283
17,851	539,466	540,0	542,0	0,0	100,1	98,3	0,000	0,180	0,185	353	0,280
17,677	539,454	540,0	542,0	0,0	101,0	99,0	0,000	0,180	0,184	354	0,277
17,619	539,438	540,1	542,0	0,0	101,2	99,3	0,000	0,180	0,184	355	0,276
17,675	539,438	540,2	542,0	0,0	100,8	98,9	0,000	0,180	0,184	356	0,277
17,793	539,421	540,2	542,0	0,0	100,2	98,3	0,000	0,180	0,184	357	0,279
17,851	539,425	540,1	542,0	0,0	100,0	98,3	0,000	0,180	0,185	358	0,280
17,558	539,402	540,1	542,0	0,0	101,6	99,7	0,000	0,180	0,184	359	0,275
17,735	539,392	540,1	542,0	0,0	100,5	98,8	0,000	0,180	0,184	360	0,278
17,993	539,388	540,0	541,9	0,0	99,2	97,5	0,000	0,180	0,185	361	0,282
17,854	539,384	540,0	541,9	0,0	100,0	98,0	0,000	0,180	0,184	362	0,280
17,910	539,385	540,0	541,9	0,0	99,6	97,8	0,000	0,180	0,184	363	0,281
17,852	539,371	540,0	541,9	0,0	99,7	98,1	0,000	0,180	0,184	364	0,280
17,839	539,348	539,9	541,9	0,0	100,0	98,2	0,000	0,180	0,184	365	0,280
17,677	539,349	539,9	541,9	0,0	101,1	99,3	0,000	0,180	0,185	366	0,277
17,734	539,333	539,9	541,9	0,0	100,7	98,6	0,000	0,180	0,184	367	0,278
17,617	539,329	539,9	541,8	0,0	101,4	99,4	0,000	0,180	0,184	368	0,276
17,967	539,324	539,9	541,8	0,0	99,2	97,6	0,000	0,180	0,184	369	0,282
17,684	539,307	539,8	541,8	0,0	101,0	98,9	0,000	0,180	0,184	370	0,277
17,675	539,300	539,8	541,8	0,0	100,9	99,0	0,000	0,180	0,184	371	0,277
17,968	539,300	539,8	541,8	0,0	99,4	97,5	0,000	0,180	0,184	372	0,282
17,781	539,285	539,8	541,8	0,0	100,5	98,6	0,000	0,180	0,184	373	0,279
17,734	539,296	539,8	541,8	0,0	100,8	98,8	0,000	0,180	0,185	374	0,278
17,729	539,259	539,7	541,7	0,0	100,7	98,9	0,000	0,180	0,185	375	0,278
17,966	539,277	539,8	541,7	0,0	99,2	97,6	0,000	0,180	0,185	376	0,282
17,732	539,263	539,8	541,7	0,0	100,5	98,9	0,000	0,180	0,185	377	0,278
17,788	539,267	539,8	541,7	0,0	100,1	98,5	0,000	0,180	0,185	378	0,279
17,732	539,247	539,8	541,7	0,0	100,6	98,8	0,000	0,180	0,185	379	0,278
17,849	539,246	539,7	541,7	0,0	100,0	98,3	0,000	0,180	0,185	380	0,280
17,614	539,230	539,7	541,7	0,0	101,3	99,3	0,000	0,180	0,185	381	0,276
17,906	539,226	539,7	541,7	0,0	99,8	97,9	0,000	0,180	0,184	382	0,281
17,734	539,224	539,7	541,7	0,0	100,5	98,9	0,000	0,180	0,185	383	0,278
17,850	539,215	539,7	541,7	0,0	100,0	98,1	0,000	0,180	0,184	384	0,280
17,674	539,216	539,7	541,7	0,0	100,8	98,9	0,000	0,180	0,184	385	0,277
17,615	539,211	539,7	541,6	0,0	101,1	99,5	0,000	0,179	0,184	386	0,276
17,908	539,206	539,7	541,7	0,0	99,5	97,8	0,000	0,180	0,184	387	0,281
17,732	539,209	539,7	541,7	0,0	100,4	98,6	0,000	0,180	0,184	388	0,278
17,613	539,198	539,7	541,7	0,0	101,0	99,2	0,000	0,179	0,184	389	0,276
17,912	539,195	539,7	541,6	0,0	99,5	97,7	0,000	0,179	0,184	390	0,281
17,615	539,186	539,7	541,7	0,0	101,2	99,6	0,000	0,180	0,184	391	0,276
17,849	539,193	539,7	541,6	0,0	99,8	98,3	0,000	0,180	0,185	392	0,280
17,907	539,198	539,7	541,6	0,0	99,6	98,0	0,000	0,180	0,185	393	0,281
17,731	539,199	539,7	541,7	0,0	100,7	98,9	0,000	0,180	0,185	394	0,278
17,733	539,197	539,7	541,7	0,0	100,6	99,1	0,000	0,180	0,185	395	0,278
17,907	539,184	539,7	541,7	0,0	99,7	98,2	0,000	0,180	0,185	396	0,281
17,952	460,000	539,7	541,7	0,0	99,3	97,6	0,000	0,180	0,185	397	0,282

17,78	Inlet +	Inlet +	Inlet +								0,276
	Outlet	Outlet	Outlet	Average	Average	Average	#1st Hr	#1	#2		
Tunnel	Temp.	Temp.	Temp.	97,18	102,90	102,94	System 1st Hr	System 1	System 2		SQRT
Velocity	Meter 1st Hr	Meter 1	Meter 2	Proportional Rates			Vol.Std.	Vol.Std.	Vol.Std.		Delta-P
				PR1at hour	PR1	PR2				Time	
Ft/Sec	Deg. R	Deg. R	Deg. R	%	%	%	(ft3)	(ft3)	(ft3)	min	(In H20)2
17,937	537,724	536,4	536,6				0,182	0,171	0,181	0	0,273
17,770	537,795	536,4	536,8	97,0	102,6	103,8	0,182	0,171	0,180	1	0,275
17,593	537,808	536,4	536,9	98,1	103,8	104,9	0,182	0,171	0,180	2	0,272
17,713	537,822	536,4	536,9	97,3	103,1	103,9	0,182	0,171	0,180	3	0,274
17,861	537,826	536,4	537,0	96,9	102,5	103,7	0,182	0,171	0,180	4	0,276
17,807	537,845	536,3	537,0	96,6	102,4	103,4	0,182	0,171	0,181	5	0,276
17,569	537,864	536,4	537,2	97,9	103,8	104,8	0,182	0,171	0,180	6	0,272
17,567	537,888	536,4	537,3	97,9	103,7	104,7	0,182	0,171	0,180	7	0,273
17,679	537,951	536,5	537,4	97,0	102,9	103,7	0,182	0,171	0,180	8	0,275
17,613	537,963	536,5	537,6	97,4	103,5	104,4	0,182	0,172	0,180	9	0,273
17,762	537,956	536,6	537,7	96,3	101,9	103,1	0,182	0,171	0,180	10	0,276
17,742	537,978	536,6	537,8	96,9	102,7	103,6	0,182	0,171	0,180	11	0,275
17,690	538,015	536,7	538,0	97,2	103,1	103,9	0,182	0,171	0,180	12	0,274
17,557	538,006	536,7	538,1	97,9	103,8	104,4	0,182	0,172	0,180	13	0,273
17,505	538,034	536,8	538,1	98,4	104,1	104,8	0,182	0,172	0,180	14	0,272
17,631	538,070	536,8	538,2	97,6	103,6	104,2	0,182	0,172	0,180	15	0,273
17,715	538,077	536,9	538,3	97,0	102,9	103,9	0,181	0,171	0,180	16	0,275
17,695	538,109	536,9	538,4	97,2	103,1	103,7	0,182	0,171	0,180	17	0,274
17,708	538,112	536,9	538,5	97,4	103,1	104,2	0,182	0,171	0,180	18	0,274
17,765	538,117	537,0	538,6	97,0	103,0	103,5	0,182	0,172	0,180	19	0,275
17,566	538,119	537,0	538,8	98,2	104,2	105,0	0,182	0,172	0,180	20	0,272
17,602	538,117	537,0	538,8	98,2	104,2	104,6	0,182	0,172	0,180	21	0,273
17,902	538,130	537,0	538,9	96,5	102,4	103,1	0,182	0,172	0,180	22	0,277
17,599	538,158	537,1	539,0	98,1	104,0	105,0	0,182	0,172	0,180	23	0,272
17,771	538,199	537,2	539,1	97,1	103,2	103,6	0,182	0,172	0,180	24	0,275
17,833	538,223	537,2	539,1	96,7	102,4	103,3	0,182	0,172	0,180	25	0,276
17,708	538,257	537,2	539,2	97,3	103,0	104,0	0,182	0,171	0,180	26	0,274
17,772	538,262	537,3	539,3	97,0	103,0	103,5	0,182	0,171	0,180	27	0,275
17,736	538,279	537,3	539,3	97,3	103,2	103,9	0,182	0,172	0,180	28	0,275
17,711	538,310	537,4	539,4	97,5	103,4	104,0	0,182	0,172	0,180	29	0,274
17,715	538,318	537,4	539,5	97,3	103,1	103,6	0,182	0,171	0,180	30	0,274
17,581	538,334	537,4	539,6	97,9	103,6	104,4	0,182	0,171	0,179	31	0,273
17,833	538,343	537,4	539,6	96,7	102,5	103,2	0,182	0,171	0,180	32	0,276
17,781	538,371	537,5	539,7	97,1	102,8	103,6	0,182	0,171	0,180	33	0,275
17,888	538,407	537,5	539,8	96,4	102,1	102,7	0,182	0,171	0,180	34	0,277
17,655	538,400	537,5	539,8	97,6	103,5	104,3	0,182	0,171	0,180	35	0,273
17,842	538,437	537,6	539,9	96,5	102,6	103,2	0,181	0,171	0,180	36	0,276
17,650	538,466	537,5	539,9	97,7	103,5	103,9	0,182	0,171	0,180	37	0,273
17,834	538,494	537,6	539,9	96,7	102,7	103,0	0,182	0,172	0,179	38	0,276
17,828	538,531	537,6	540,0	96,7	102,5	103,2	0,182	0,172	0,180	39	0,276
17,778	538,542	537,6	540,0	97,1	103,0	103,6	0,182	0,172	0,180	40	0,275
17,746	538,543	537,6	540,1	97,1	103,1	103,7	0,182	0,172	0,180	41	0,275
17,656	538,529	537,7	540,1	97,7	103,7	104,1	0,182	0,172	0,180	42	0,273
17,824	538,541	537,8	540,1	96,6	102,6	102,9	0,182	0,172	0,179	43	0,276
17,685	538,582	537,8	540,1	97,5	103,3	103,7	0,182	0,172	0,179	44	0,274
17,706	538,622	537,8	540,1	97,3	103,2	103,5	0,182	0,171	0,179	45	0,274
17,827	538,666	537,8	540,2	96,5	102,5	103,0	0,181	0,172	0,179	46	0,276
17,694	538,692	537,8	540,3	96,2	102,2	102,5	0,181	0,172	0,179	47	0,277
17,830	538,736	537,9	540,4	96,6	102,6	103,0	0,181	0,172	0,179	48	0,276
17,767	538,778	537,9	540,4	96,9	102,6	103,2	0,181	0,171	0,179	49	0,275
17,715	538,824	538,0	540,5	97,1	102,9	103,8	0,181	0,171	0,179	50	0,274
17,591	538,835	538,0	540,6	97,9	103,9	104,4	0,182	0,171	0,180	51	0,273
17,709	538,864	538,0	540,6	97,2	103,3	103,5	0,182	0,172	0,179	52	0,274
17,526	538,903	538,0	540,7	98,1	104,2	104,6	0,181	0,171	0,179	53	0,272
17,531	538,923	538,0	540,7	98,2	104,2	104,5	0,182	0,171	0,179	54	0,272
17,830	538,964	538,0	540,7	96,5	102,4	102,8	0,181	0,171	0,179	55	0,276
17,806	539,007	538,0	540,7	96,7	102,4	103,2	0,182	0,171	0,179	56	0,276
17,834	539,046	538,0	540,7	96,5	102,4	102,7	0,181	0,171	0,179	57	0,276
18,069	539,072	538,1	540,8	95,3	101,1	101,7	0,181	0,171	0,179	58	0,280
17,770	539,103	538,1	540,8	96,8	102,5	103,2	0,181	0,171	0,180	59	0,275
17,700	538,975	538,1	540,9	0,0	103,2	103,6	0,000	0,171	0,179	60	0,274
17,578	538,825	538,1	540,9	0,0	104,0	104,2	0,000	0,172	0,179	61	0,272
17,716	538,740	538,2	540,9	0,0	103,2	103,7	0,000	0,172	0,179	62	0,274
17,531	538,699	538,2	540,9	0,0	104,2	104,9	0,000	0,171	0,180	63	0,272
17,830	538,685	538,3	540,9	0,0	102,5	103,1	0,000	0,171	0,180	64	0,276
17,821	538,687	538,3	540,8	0,0	102,4	102,8	0,000	0,171	0,180	65	0,276
17,630	538,678	538,3	540,8	0,0	102,4	102,7	0,000	0,171	0,179	66	0,276
17,636	538,697	538,4	540,8	0,0	103,5	104,1	0,000	0,171	0,179	67	0,273
17,710	538,713	538,4	540,8	0,0	103,0	104,0	0,000	0,171	0,180	68	0,274
17,825	538,722	538,4	540,8	0,0	102,4	103,2	0,000	0,171	0,180	69	0,276
17,713	538,721	538,5	540,8	0,0	103,3	103,6	0,000	0,171	0,180	70	0,274
17,833	538,733	538,5	540,8	0,0	102,4	102,8	0,000	0,171	0,179	71	0,276
17,716	538,748	538,5	540,8	0,0	103,0	103,7	0,000	0,171	0,179	72	0,274
17,716	538,788	538,6	540,8	0,0	103,1	103,8	0,000	0,171	0,180	73	0,274
17,598	538,799	538,6	540,8	0,0	103,8	104,5	0,000	0,171	0,180	74	0,273
17,723	538,792	538,7	540,8	0,0	103,1	103,7	0,000	0,171	0,179	75	0,274
17,646	538,803	538,7	540,8	0,0	103,6	104,3	0,000	0,171	0,180	76	0,273
17,721	538,824	538,6	540,8	0,0	103,1	103,8	0,000	0,171	0,180	77	0,274
17,959	538,835	538,7	540,8	0,0	101,7	102,3	0,000	0,171	0,179	78	0,278
17,482	538,842	538,7	540,8	0,0	104,7	105,2	0,000	0,171	0,179	79	0,271

17,720	538,873	538,9	540,9	0,0	103,2	103,8	0,000	0,171	0,180	80	0,274
17,774	538,886	538,9	540,9	0,0	102,8	103,5	0,000	0,171	0,180	81	0,275
17,828	538,920	538,9	540,9	0,0	102,3	103,3	0,000	0,171	0,180	82	0,276
17,751	538,947	538,9	540,9	0,0	102,9	103,5	0,000	0,171	0,180	83	0,275
17,888	538,972	538,9	541,0	0,0	102,1	102,6	0,000	0,171	0,180	84	0,277
17,706	538,998	538,9	541,0	0,0	103,0	103,7	0,000	0,171	0,180	85	0,274
17,710	539,018	538,9	541,0	0,0	103,2	103,7	0,000	0,171	0,180	86	0,274
17,610	539,058	538,9	541,0	0,0	103,6	104,2	0,000	0,171	0,179	87	0,273
17,823	539,082	538,9	541,1	0,0	102,5	102,7	0,000	0,171	0,179	88	0,276
17,836	539,109	539,0	541,1	0,0	102,4	103,0	0,000	0,171	0,179	89	0,276
17,713	539,145	539,0	541,1	0,0	103,1	103,5	0,000	0,171	0,179	90	0,274
17,777	539,169	539,0	541,1	0,0	102,7	103,2	0,000	0,171	0,179	91	0,276
17,640	539,201	539,0	541,2	0,0	103,6	103,8	0,000	0,172	0,179	92	0,273
17,709	539,235	539,0	541,2	0,0	103,0	103,6	0,000	0,171	0,179	93	0,274
17,829	539,265	539,0	541,3	0,0	102,2	102,7	0,000	0,171	0,179	94	0,276
17,811	539,298	539,1	541,3	0,0	102,3	103,2	0,000	0,171	0,180	95	0,276
17,585	539,317	539,1	541,3	0,0	103,9	104,5	0,000	0,171	0,180	96	0,273
17,829	539,345	539,1	541,3	0,0	102,3	102,8	0,000	0,171	0,180	97	0,276
17,824	539,394	539,2	541,3	0,0	102,4	103,0	0,000	0,171	0,179	98	0,276
17,719	539,423	539,2	541,4	0,0	102,8	103,6	0,000	0,171	0,180	99	0,275
17,772	539,454	539,2	541,4	0,0	102,5	103,5	0,000	0,171	0,180	100	0,275
17,708	539,493	539,3	541,4	0,0	103,1	103,6	0,000	0,171	0,180	101	0,274
17,818	539,500	539,3	541,5	0,0	102,6	102,7	0,000	0,171	0,179	102	0,276
17,596	539,508	539,3	541,5	0,0	103,8	104,4	0,000	0,171	0,179	103	0,273
17,833	539,545	539,3	541,5	0,0	102,3	102,9	0,000	0,171	0,179	104	0,276
17,610	539,592	539,4	541,5	0,0	103,7	104,2	0,000	0,171	0,179	105	0,273
17,832	539,617	539,4	541,5	0,0	102,2	102,7	0,000	0,171	0,179	106	0,276
17,827	539,632	539,4	541,6	0,0	102,3	102,9	0,000	0,171	0,179	107	0,276
17,888	539,665	539,5	541,6	0,0	101,8	102,5	0,000	0,171	0,179	108	0,277
17,717	539,694	539,5	541,6	0,0	103,0	103,8	0,000	0,171	0,179	109	0,274
17,817	539,740	539,6	541,7	0,0	102,5	103,1	0,000	0,171	0,180	110	0,276
17,829	539,773	539,6	541,7	0,0	102,3	102,8	0,000	0,171	0,179	111	0,276
17,403	539,826	539,7	541,8	0,0	104,7	105,4	0,000	0,171	0,179	112	0,270
17,727	539,826	539,7	541,8	0,0	102,9	103,5	0,000	0,171	0,179	113	0,275
17,830	539,844	539,6	541,7	0,0	102,4	103,0	0,000	0,171	0,179	114	0,276
17,772	539,865	539,6	541,8	0,0	102,8	103,2	0,000	0,171	0,179	115	0,275
17,892	539,913	539,6	541,8	0,0	102,1	102,6	0,000	0,171	0,179	116	0,277
17,772	539,922	539,7	541,8	0,0	102,8	103,3	0,000	0,171	0,179	117	0,275
17,593	539,937	539,6	541,8	0,0	103,6	104,2	0,000	0,171	0,179	118	0,273
17,903	539,983	539,7	541,8	0,0	102,0	102,5	0,000	0,171	0,179	119	0,277
17,829	540,005	539,8	541,9	0,0	102,4	103,1	0,000	0,171	0,179	120	0,276
17,819	540,021	539,9	541,9	0,0	102,2	102,9	0,000	0,171	0,180	121	0,276
17,821	540,042	539,9	541,9	0,0	102,0	102,6	0,000	0,171	0,179	122	0,276
17,579	540,079	539,9	542,0	0,0	103,3	104,2	0,000	0,171	0,179	123	0,273
17,816	540,101	539,9	542,0	0,0	102,2	102,9	0,000	0,171	0,180	124	0,276
17,823	540,130	539,9	542,0	0,0	102,1	102,5	0,000	0,171	0,179	125	0,276
17,578	540,153	540,0	542,0	0,0	103,4	104,2	0,000	0,171	0,179	126	0,273
17,688	540,182	540,0	542,1	0,0	102,8	103,3	0,000	0,171	0,179	127	0,274
17,807	540,197	540,1	542,1	0,0	102,2	102,9	0,000	0,171	0,179	128	0,276
17,814	540,206	540,1	542,1	0,0	102,2	102,8	0,000	0,171	0,179	129	0,276
17,813	540,211	540,1	542,1	0,0	102,2	102,5	0,000	0,171	0,179	130	0,276
17,632	540,251	540,1	542,1	0,0	103,2	103,8	0,000	0,171	0,179	131	0,273
17,753	540,264	540,1	542,1	0,0	102,6	103,1	0,000	0,171	0,179	132	0,275
17,755	540,279	540,1	542,1	0,0	102,5	103,2	0,000	0,171	0,179	133	0,275
17,867	540,283	540,1	542,1	0,0	101,8	102,2	0,000	0,171	0,179	134	0,277
17,807	540,285	540,1	542,1	0,0	102,2	102,7	0,000	0,171	0,179	135	0,276
17,745	540,296	540,1	542,1	0,0	102,5	102,9	0,000	0,171	0,179	136	0,275
17,808	540,319	540,1	542,2	0,0	102,0	102,4	0,000	0,171	0,179	137	0,276
17,681	540,326	540,1	542,1	0,0	102,9	103,4	0,000	0,171	0,179	138	0,274
17,760	540,347	540,1	542,2	0,0	102,2	102,9	0,000	0,171	0,179	139	0,276
17,924	540,355	540,1	542,2	0,0	101,5	101,9	0,000	0,171	0,179	140	0,278
17,862	540,367	540,1	542,2	0,0	101,7	102,4	0,000	0,171	0,179	141	0,277
17,819	540,376	540,1	542,2	0,0	102,0	102,6	0,000	0,171	0,179	142	0,277
17,912	540,391	540,1	542,2	0,0	101,4	102,1	0,000	0,171	0,179	143	0,278
17,803	540,409	540,2	542,2	0,0	102,2	102,6	0,000	0,171	0,179	144	0,276
17,822	540,426	540,2	542,2	0,0	101,7	102,7	0,000	0,171	0,179	145	0,277
17,799	540,425	540,2	542,3	0,0	101,9	102,6	0,000	0,171	0,179	146	0,276
17,796	540,446	540,3	542,3	0,0	102,0	102,7	0,000	0,171	0,179	147	0,276
17,799	540,476	540,2	542,3	0,0	102,0	102,8	0,000	0,171	0,180	148	0,276
17,678	540,484	540,3	542,3	0,0	102,9	103,1	0,000	0,171	0,179	149	0,274
17,741	540,501	540,3	542,3	0,0	102,1	102,9	0,000	0,171	0,179	150	0,275
17,616	540,500	540,3	542,3	0,0	103,1	103,6	0,000	0,171	0,179	151	0,273
17,857	540,519	540,4	542,3	0,0	101,7	102,3	0,000	0,171	0,179	152	0,277
17,795	540,535	540,4	542,4	0,0	101,8	102,8	0,000	0,171	0,179	153	0,276
17,736	540,534	540,4	542,3	0,0	102,3	102,9	0,000	0,171	0,179	154	0,275
17,677	540,558	540,4	542,3	0,0	102,9	103,5	0,000	0,171	0,179	155	0,274
17,741	540,548	540,4	542,4	0,0	102,2	102,7	0,000	0,171	0,179	156	0,275
17,850	540,541	540,4	542,4	0,0	101,6	102,2	0,000	0,171	0,179	157	0,277
18,148	540,551	540,4	542,4	0,0	99,8	100,7	0,000	0,171	0,179	158	0,282
17,848	540,585	540,4	542,4	0,0	101,8	102,2	0,000	0,171	0,179	159	0,277
17,731	540,585	540,5	542,4	0,0	102,1	103,0	0,000	0,171	0,179	160	0,275
17,850	540,583	540,4	542,4	0,0	101,5	102,3	0,000	0,171	0,179	161	0,277
17,968	540,582	540,5	542,4	0,0	100,7	101,6	0,000	0,171	0,179	162	0,279
17,851	540,568	540,5	542,5	0,0	101,5	102,3	0,000	0,171	0,179	163	0,277
17,792	540,588	540,5	542,4	0,0	102,0	102,6	0,000	0,171	0,179	164	0,276
17,735	540,602	540,5	542,5	0,0	102,4	102,9	0,000	0,171	0,179	165	0,275

17,851	540,620	540,5	542,5	0,0	101,6	102,1	0,000	0,171	0,179	166	0,277
17,851	540,621	540,5	542,5	0,0	101,5	102,0	0,000	0,171	0,179	167	0,277
17,910	540,644	540,5	542,5	0,0	101,2	101,8	0,000	0,171	0,179	168	0,278
17,850	540,659	540,6	542,5	0,0	101,6	102,1	0,000	0,171	0,179	169	0,277
17,786	540,662	540,6	542,5	0,0	102,0	102,5	0,000	0,171	0,179	170	0,276
17,789	540,674	540,6	542,5	0,0	101,9	102,4	0,000	0,171	0,179	171	0,276
17,788	540,659	540,6	542,6	0,0	101,8	102,6	0,000	0,171	0,179	172	0,276
17,789	540,663	540,7	542,6	0,0	101,9	102,6	0,000	0,171	0,179	173	0,276
17,791	540,671	540,7	542,6	0,0	101,8	102,4	0,000	0,171	0,179	174	0,276
17,910	540,677	540,8	542,7	0,0	101,1	101,9	0,000	0,171	0,179	175	0,278
17,788	540,680	540,8	542,7	0,0	102,0	102,4	0,000	0,171	0,179	176	0,276
17,789	540,706	540,7	542,6	0,0	101,9	102,6	0,000	0,171	0,179	177	0,276
17,906	540,705	540,7	542,7	0,0	101,2	101,8	0,000	0,171	0,179	178	0,278
17,850	540,697	540,7	542,7	0,0	101,7	102,3	0,000	0,171	0,179	179	0,277
17,853	540,716	540,7	542,7	0,0	101,7	102,1	0,000	0,171	0,179	180	0,277
17,735	540,729	540,8	542,7	0,0	102,2	103,1	0,000	0,171	0,179	181	0,275
17,793	540,745	540,8	542,7	0,0	101,8	102,4	0,000	0,171	0,179	182	0,276
17,734	540,770	540,8	542,7	0,0	102,2	103,0	0,000	0,171	0,179	183	0,275
17,842	540,789	540,8	542,7	0,0	101,7	102,2	0,000	0,171	0,179	184	0,277
17,792	540,804	540,8	542,8	0,0	101,9	102,4	0,000	0,171	0,179	185	0,276
17,793	540,822	540,8	542,8	0,0	101,8	102,4	0,000	0,171	0,179	186	0,276
17,768	540,835	540,8	542,8	0,0	102,0	102,8	0,000	0,171	0,179	187	0,276
18,032	540,863	540,8	542,8	0,0	100,6	101,0	0,000	0,171	0,179	188	0,280
17,796	540,876	540,9	542,8	0,0	101,9	102,7	0,000	0,171	0,179	189	0,276
17,717	540,876	540,9	542,8	0,0	102,4	103,1	0,000	0,171	0,179	190	0,275
17,675	540,891	541,0	542,9	0,0	102,5	103,3	0,000	0,171	0,179	191	0,274
17,794	540,903	541,0	542,9	0,0	102,0	102,6	0,000	0,171	0,179	192	0,276
17,855	540,919	541,0	542,9	0,0	101,4	102,2	0,000	0,171	0,179	193	0,277
17,855	540,932	541,0	542,9	0,0	101,5	102,1	0,000	0,171	0,179	194	0,277
17,851	540,938	541,0	542,9	0,0	101,5	101,9	0,000	0,171	0,179	195	0,277
17,734	540,959	541,0	542,9	0,0	102,2	102,7	0,000	0,171	0,179	196	0,275
17,736	540,973	541,1	542,9	0,0	102,3	102,8	0,000	0,171	0,179	197	0,275
17,853	540,997	541,1	542,9	0,0	101,6	102,2	0,000	0,171	0,179	198	0,277
17,734	541,000	541,1	543,0	0,0	102,1	102,7	0,000	0,171	0,179	199	0,275
17,834	541,024	541,1	543,0	0,0	101,6	102,2	0,000	0,171	0,179	200	0,277
17,796	541,047	541,2	543,0	0,0	101,8	102,6	0,000	0,171	0,179	201	0,276
17,854	541,056	541,2	543,0	0,0	101,4	101,9	0,000	0,171	0,179	202	0,277
18,090	541,060	541,2	543,1	0,0	100,0	100,7	0,000	0,170	0,179	203	0,281
17,797	541,081	541,2	543,1	0,0	101,9	102,5	0,000	0,171	0,179	204	0,276
17,738	541,100	541,2	543,1	0,0	102,2	102,8	0,000	0,171	0,179	205	0,275
17,676	541,109	541,3	543,1	0,0	102,4	103,1	0,000	0,171	0,179	206	0,274
17,824	541,128	541,3	543,1	0,0	101,8	102,1	0,000	0,171	0,179	207	0,277
17,858	541,143	541,3	543,1	0,0	101,3	102,1	0,000	0,171	0,179	208	0,277
17,619	541,159	541,3	543,1	0,0	102,7	103,6	0,000	0,170	0,179	209	0,273
17,739	541,168	541,3	543,1	0,0	102,1	102,7	0,000	0,170	0,179	210	0,275
17,904	541,152	541,3	543,1	0,0	101,4	101,8	0,000	0,171	0,179	211	0,278
17,800	541,188	541,3	543,1	0,0	101,8	102,5	0,000	0,171	0,179	212	0,276
18,035	541,159	541,4	543,2	0,0	100,4	100,9	0,000	0,171	0,179	213	0,280
17,894	541,194	541,4	543,2	0,0	101,1	102,1	0,000	0,170	0,179	214	0,278
17,800	541,206	541,4	543,2	0,0	101,9	102,6	0,000	0,171	0,179	215	0,276
17,858	541,214	541,4	543,2	0,0	101,4	102,1	0,000	0,171	0,179	216	0,277
17,797	541,196	541,5	543,2	0,0	101,8	102,3	0,000	0,171	0,179	217	0,276
17,733	541,220	541,5	543,2	0,0	102,1	103,0	0,000	0,171	0,179	218	0,275
17,802	541,234	541,5	543,3	0,0	102,0	102,5	0,000	0,171	0,179	219	0,276
17,799	541,215	541,5	543,3	0,0	101,8	102,3	0,000	0,171	0,179	220	0,276
17,608	541,223	541,5	543,2	0,0	103,0	103,7	0,000	0,171	0,179	221	0,273
17,739	541,209	541,5	543,2	0,0	102,2	102,8	0,000	0,171	0,179	222	0,275
17,859	541,228	541,5	543,3	0,0	101,4	102,0	0,000	0,171	0,179	223	0,277
17,621	541,226	541,4	543,3	0,0	102,7	103,7	0,000	0,170	0,179	224	0,273
17,860	541,234	541,4	543,3	0,0	101,4	102,1	0,000	0,170	0,179	225	0,277
17,803	541,252	541,5	543,3	0,0	101,8	102,5	0,000	0,171	0,179	226	0,276
17,920	541,269	541,5	543,3	0,0	101,2	101,8	0,000	0,171	0,179	227	0,278
17,744	541,300	541,5	543,3	0,0	102,2	102,9	0,000	0,171	0,179	228	0,275
17,802	541,282	541,5	543,3	0,0	101,8	102,8	0,000	0,171	0,179	229	0,276
17,863	541,297	541,5	543,3	0,0	101,4	102,1	0,000	0,170	0,179	230	0,277
17,563	541,297	541,5	543,3	0,0	103,2	103,8	0,000	0,171	0,179	231	0,273
17,789	541,318	541,5	543,4	0,0	101,8	102,7	0,000	0,171	0,179	232	0,276
17,864	541,333	541,5	543,4	0,0	101,4	101,9	0,000	0,170	0,179	233	0,277
17,685	541,338	541,6	543,4	0,0	102,2	103,3	0,000	0,170	0,179	234	0,274
17,828	541,330	541,6	543,4	0,0	101,6	102,3	0,000	0,170	0,179	235	0,277
17,806	541,355	541,6	543,4	0,0	101,8	102,2	0,000	0,170	0,179	236	0,276
17,682	541,370	541,6	543,5	0,0	102,4	103,4	0,000	0,170	0,179	237	0,274
17,810	541,380	541,6	543,5	0,0	101,7	102,4	0,000	0,170	0,179	238	0,276
17,869	541,407	541,7	543,5	0,0	101,5	102,3	0,000	0,170	0,179	239	0,277
17,806	541,418	541,7	543,6	0,0	101,6	102,6	0,000	0,170	0,179	240	0,276
17,686	541,427	541,7	543,6	0,0	102,4	103,2	0,000	0,170	0,179	241	0,274
17,808	541,452	541,7	543,6	0,0	101,9	102,5	0,000	0,171	0,179	242	0,276
17,809	541,443	541,7	543,6	0,0	101,9	102,5	0,000	0,171	0,179	243	0,276
17,927	541,451	541,8	543,7	0,0	101,1	101,8	0,000	0,171	0,179	244	0,278
17,807	541,467	541,8	543,6	0,0	101,8	102,3	0,000	0,171	0,179	245	0,276
17,741	541,473	541,8	543,6	0,0	101,9	102,8	0,000	0,170	0,179	246	0,275
17,807	541,488	541,8	543,6	0,0	101,6	102,6	0,000	0,170	0,179	247	0,276
17,807	541,495	541,8	543,7	0,0	101,7	102,5	0,000	0,170	0,179	248	0,276
17,812	541,518	541,9	543,7	0,0	101,8	102,3	0,000	0,170	0,179	249	0,276
17,869	541,535	541,9	543,7	0,0	101,3	102,0	0,000	0,170	0,179	250	0,277
17,809	541,555	541,9	543,7	0,0	101,6	102,4	0,000	0,170	0,179	251	0,276

17,993	541,585	541,9	543,7	0,0	100,9	101,6	0,000	0,170	0,179	252	0,278
17,811	541,594	541,9	543,6	0,0	101,7	102,4	0,000	0,170	0,179	253	0,276
17,811	541,607	541,9	543,8	0,0	101,8	102,4	0,000	0,170	0,179	254	0,276
17,692	541,612	542,0	543,8	0,0	102,5	103,1	0,000	0,170	0,179	255	0,274
17,810	541,597	542,0	543,8	0,0	101,8	102,4	0,000	0,170	0,179	256	0,276
18,050	541,627	542,0	543,8	0,0	100,4	101,1	0,000	0,170	0,179	257	0,280
17,873	541,643	542,0	543,8	0,0	101,4	101,9	0,000	0,170	0,179	258	0,277
17,566	541,645	542,0	543,8	0,0	103,1	103,8	0,000	0,170	0,179	259	0,273
17,813	541,670	542,0	543,8	0,0	101,7	102,3	0,000	0,170	0,179	260	0,276
17,988	541,694	542,0	543,8	0,0	100,8	101,5	0,000	0,170	0,179	261	0,279
17,871	541,706	542,0	543,9	0,0	101,5	102,1	0,000	0,171	0,179	262	0,277
17,812	541,718	542,0	543,9	0,0	101,7	102,4	0,000	0,170	0,179	263	0,276
17,931	541,729	542,1	543,9	0,0	101,1	101,7	0,000	0,170	0,179	264	0,278
17,813	541,750	542,1	543,9	0,0	101,7	102,3	0,000	0,170	0,179	265	0,276
17,633	541,773	542,1	543,9	0,0	102,9	103,5	0,000	0,170	0,179	266	0,273
17,814	541,772	542,1	543,9	0,0	101,7	102,2	0,000	0,170	0,179	267	0,276
17,755	541,774	542,1	544,0	0,0	102,1	102,6	0,000	0,170	0,178	268	0,275
17,812	541,765	542,2	544,0	0,0	101,6	102,5	0,000	0,170	0,179	269	0,276
17,754	541,784	542,2	544,0	0,0	102,1	102,9	0,000	0,170	0,179	270	0,275
17,873	541,795	542,2	544,0	0,0	101,4	102,1	0,000	0,170	0,179	271	0,277
17,901	541,809	542,2	544,0	0,0	101,3	102,1	0,000	0,170	0,179	272	0,278
18,051	541,822	542,2	544,1	0,0	100,4	101,0	0,000	0,170	0,179	273	0,280
17,695	541,832	542,2	544,1	0,0	102,5	103,1	0,000	0,170	0,179	274	0,274
17,696	541,840	542,2	544,1	0,0	102,4	103,1	0,000	0,170	0,179	275	0,274
17,935	541,847	542,3	544,1	0,0	101,0	101,7	0,000	0,170	0,179	276	0,278
17,816	541,861	542,3	544,1	0,0	101,7	102,3	0,000	0,170	0,179	277	0,276
17,876	541,858	542,4	544,2	0,0	101,2	102,0	0,000	0,170	0,179	278	0,277
17,874	541,869	542,4	544,2	0,0	101,4	102,1	0,000	0,170	0,179	279	0,277
17,871	541,907	542,4	544,2	0,0	101,5	102,1	0,000	0,170	0,179	280	0,277
17,758	541,916	542,4	544,2	0,0	102,1	102,7	0,000	0,170	0,179	281	0,275
17,937	541,917	542,5	544,2	0,0	100,9	101,5	0,000	0,170	0,178	282	0,278
17,817	541,936	542,5	544,2	0,0	101,7	102,3	0,000	0,170	0,178	283	0,276
17,758	541,947	542,5	544,2	0,0	102,0	102,9	0,000	0,170	0,179	284	0,275
17,937	541,933	542,5	544,3	0,0	101,1	101,4	0,000	0,170	0,178	285	0,278
17,818	541,962	542,5	544,3	0,0	101,7	102,5	0,000	0,170	0,178	286	0,276
17,876	541,986	542,5	544,3	0,0	101,4	102,2	0,000	0,170	0,179	287	0,277
17,879	542,000	542,5	544,4	0,0	101,4	102,0	0,000	0,170	0,179	288	0,277
17,879	542,018	542,6	544,4	0,0	101,4	101,8	0,000	0,170	0,178	289	0,277
17,819	542,028	542,6	544,4	0,0	101,5	102,4	0,000	0,170	0,178	290	0,276
17,580	542,048	542,6	544,4	0,0	103,1	103,9	0,000	0,170	0,179	291	0,273
17,818	542,060	542,6	544,4	0,0	101,8	102,5	0,000	0,170	0,179	292	0,276
17,781	542,081	542,6	544,4	0,0	101,9	102,7	0,000	0,170	0,179	293	0,276
17,821	542,091	542,7	544,5	0,0	101,8	102,4	0,000	0,170	0,179	294	0,276
17,879	460,000	542,7	544,5	0,0	101,3	102,1	0,000	0,170	0,179	295	0,277

Average	Average	Average	Average								Average
17,68	Inlet +	Inlet +	Inlet +								0,275
	Outlet	Outlet	Outlet	Average	Average	Average	# 1st Hr	#1	#2		
Tunnel	Temp.	Temp.	Temp.	98,08	100,19	100,69	System 1st Hr	System 1	System 2		SQRT
Velocity	Meter 1st Hr	Meter 1	Meter 2	Proportional Rates			Vol.Std.	Vol.Std.	Vol.Std.		Delta-P
				PR1at hour	PR1	PR2				Time	
Ft/Sec	Deg. R	Deg. R	Deg. R	%	%	%	(ft3)	(ft3)	(ft3)	min	(In H2O)2
18,255	539,473	537,9	538,2				0,181	0,170	0,180	0	0,276
17,776	539,490	537,9	538,3	97,5	100,4	101,3	0,181	0,171	0,180	1	0,275
17,489	539,530	537,9	538,3	98,6	101,6	102,2	0,181	0,171	0,179	2	0,272
17,650	539,567	537,9	538,4	97,5	100,7	101,6	0,181	0,171	0,180	3	0,274
17,540	539,637	537,9	538,5	98,3	101,5	102,0	0,181	0,171	0,180	4	0,272
17,545	539,679	537,9	538,7	98,2	101,5	102,3	0,181	0,171	0,180	5	0,273
17,699	539,675	537,9	538,8	97,0	100,2	100,9	0,181	0,171	0,180	6	0,275
17,407	539,628	537,9	538,9	98,8	101,9	102,6	0,181	0,171	0,180	7	0,271
17,649	539,604	537,9	538,9	97,5	100,7	101,3	0,181	0,171	0,180	8	0,274
17,656	539,626	537,9	539,0	97,5	100,8	101,3	0,181	0,171	0,180	9	0,274
17,476	539,674	538,0	539,1	98,5	101,8	102,5	0,181	0,171	0,180	10	0,272
17,551	539,749	538,0	539,2	98,2	101,4	102,2	0,181	0,171	0,180	11	0,273
17,559	539,774	538,1	539,4	98,3	101,4	102,2	0,181	0,171	0,180	12	0,273
17,739	539,794	538,1	539,4	97,3	100,6	101,0	0,181	0,171	0,180	13	0,275
17,802	539,824	538,2	539,5	97,0	100,1	100,9	0,181	0,171	0,180	14	0,276
17,448	539,849	538,2	539,6	99,0	102,3	102,8	0,181	0,171	0,180	15	0,271
17,321	539,886	538,3	539,7	99,6	103,1	103,5	0,181	0,171	0,180	16	0,269
17,701	539,889	538,3	539,9	97,8	101,0	101,5	0,181	0,171	0,179	17	0,274
17,646	539,948	538,3	540,0	98,0	101,4	101,5	0,181	0,171	0,179	18	0,274
17,595	539,919	538,4	540,1	98,4	101,6	102,2	0,181	0,171	0,179	19	0,273
17,717	539,949	538,4	540,2	97,8	100,8	101,5	0,181	0,171	0,179	20	0,274
17,460	539,975	538,4	540,3	99,1	102,2	102,6	0,181	0,171	0,179	21	0,271
17,602	540,012	538,5	540,4	98,4	101,8	102,2	0,181	0,171	0,179	22	0,273
17,777	540,027	538,6	540,5	97,5	100,7	101,4	0,181	0,171	0,180	23	0,275
17,776	540,056	538,6	540,5	97,4	100,6	101,3	0,181	0,171	0,180	24	0,275
17,601	540,085	538,6	540,6	98,5	101,6	101,9	0,181	0,171	0,179	25	0,273
17,475	540,117	538,6	540,7	99,2	102,1	102,6	0,181	0,171	0,179	26	0,271
17,697	540,175	538,7	540,8	98,0	101,3	101,8	0,181	0,171	0,179	27	0,274
17,475	540,199	538,7	540,8	99,2	102,4	102,9	0,181	0,171	0,179	28	0,271
17,725	540,252	538,7	540,9	97,7	100,9	101,4	0,181	0,171	0,179	29	0,274
17,606	540,232	538,8	541,0	98,5	101,5	102,1	0,181	0,171	0,179	30	0,272
17,492	540,215	538,8	541,0	99,1	102,5	102,8	0,181	0,171	0,179	31	0,271
17,613	540,231	538,8	541,0	98,6	101,7	102,0	0,181	0,171	0,179	32	0,273
17,662	540,286	538,9	541,0	98,1	101,1	101,7	0,181	0,171	0,179	33	0,273
17,598	540,297	538,9	541,1	98,5	101,7	102,1	0,181	0,171	0,179	34	0,273
17,779	540,325	538,9	541,1	97,5	100,6	101,1	0,181	0,171	0,179	35	0,275
17,516	540,350	538,9	541,2	98,5	101,7	102,6	0,181	0,171	0,179	36	0,272
17,419	540,372	538,9	541,3	99,4	102,9	103,2	0,181	0,171	0,179	37	0,270
17,745	540,414	539,0	541,4	97,6	100,8	101,3	0,181	0,171	0,179	38	0,275
17,903	540,477	539,0	541,5	96,8	100,0	100,2	0,181	0,171	0,179	39	0,277
17,727	540,526	539,0	541,5	97,8	101,0	101,3	0,181	0,171	0,179	40	0,274
17,722	540,586	539,0	541,5	97,7	100,8	101,2	0,181	0,171	0,179	41	0,274
17,783	540,626	539,0	541,6	97,5	100,7	101,0	0,181	0,171	0,179	42	0,275
17,727	540,689	539,0	541,7	97,7	100,8	101,3	0,181	0,171	0,179	43	0,274
17,540	540,724	539,1	541,7	98,7	102,2	102,4	0,181	0,171	0,179	44	0,272
17,664	540,746	539,1	541,7	98,0	101,0	101,7	0,181	0,171	0,179	45	0,273
17,838	540,747	539,1	541,8	97,0	100,2	100,6	0,181	0,171	0,179	46	0,276
17,551	540,763	539,1	541,8	98,7	101,8	102,1	0,181	0,171	0,179	47	0,272
17,479	540,817	539,1	541,8	99,0	102,3	102,8	0,181	0,171	0,179	48	0,271
17,789	540,848	539,2	541,9	97,3	100,6	101,2	0,181	0,171	0,179	49	0,275
17,600	540,870	539,2	542,0	98,4	101,7	101,8	0,181	0,171	0,179	50	0,272
17,717	540,933	539,2	542,0	97,7	101,1	101,0	0,181	0,171	0,178	51	0,274
17,726	540,958	539,3	542,1	97,8	101,0	101,4	0,181	0,171	0,179	52	0,274
17,602	541,010	539,3	542,1	98,3	101,7	102,0	0,181	0,171	0,179	53	0,273
17,767	541,059	539,3	542,1	97,5	100,7	101,2	0,181	0,171	0,179	54	0,275
17,953	541,110	539,4	542,1	96,3	99,7	100,3	0,180	0,171	0,179	55	0,278
17,491	541,156	539,4	542,2	98,9	102,6	102,8	0,180	0,171	0,179	56	0,271
17,726	541,189	539,4	542,2	97,5	101,2	101,5	0,180	0,171	0,179	57	0,274
17,489	541,227	539,4	542,3	98,9	102,5	102,7	0,180	0,171	0,179	58	0,271
17,757	541,244	539,5	542,4	97,6	100,9	101,3	0,181	0,171	0,179	59	0,275
17,790	540,988	539,5	542,4	0,0	100,9	100,8	0,000	0,171	0,179	60	0,275
17,606	540,836	539,5	542,4	0,0	101,8	101,9	0,000	0,171	0,179	61	0,273
17,725	540,755	539,6	542,3	0,0	101,0	101,1	0,000	0,171	0,179	62	0,274
17,838	540,693	539,7	542,3	0,0	100,3	100,7	0,000	0,171	0,179	63	0,276
17,622	540,672	539,8	542,2	0,0	101,4	101,8	0,000	0,171	0,179	64	0,273
17,726	540,646	539,8	542,2	0,0	101,0	101,3	0,000	0,171	0,179	65	0,274
17,839	540,635	539,9	542,2	0,0	100,1	100,7	0,000	0,171	0,179	66	0,276
17,722	540,633	539,9	542,2	0,0	100,7	101,1	0,000	0,171	0,179	67	0,274
17,656	540,630	539,9	542,2	0,0	101,1	101,6	0,000	0,171	0,179	68	0,273
17,601	540,636	540,0	542,2	0,0	101,6	102,0	0,000	0,171	0,179	69	0,273
17,715	540,637	540,0	542,2	0,0	100,8	101,3	0,000	0,171	0,179	70	0,274
17,897	540,654	540,0	542,2	0,0	99,8	100,1	0,000	0,171	0,179	71	0,277
17,774	540,664	540,1	542,2	0,0	100,2	101,0	0,000	0,170	0,179	72	0,275
17,770	540,680	540,1	542,2	0,0	100,3	100,9	0,000	0,170	0,179	73	0,275
17,525	540,684	540,1	542,2	0,0	101,9	102,1	0,000	0,171	0,179	74	0,272
17,825	540,686	540,1	542,2	0,0	99,8	100,6	0,000	0,171	0,179	75	0,276
17,701	540,735	540,1	542,2	0,0	100,6	101,1	0,000	0,170	0,179	76	0,274
17,758	540,729	540,2	542,2	0,0	100,4	100,9	0,000	0,171	0,179	77	0,275
17,772	540,759	540,2	542,2	0,0	100,5	100,7	0,000	0,171	0,179	78	0,276

17,817	540,761	540,2	542,2	0,0	99,9	100,3	0,000	0,171	0,179	79	0,276
17,813	540,775	540,2	542,3	0,0	99,8	100,4	0,000	0,170	0,179	80	0,276
17,693	540,790	540,2	542,3	0,0	100,6	101,1	0,000	0,170	0,179	81	0,274
17,669	540,810	540,3	542,3	0,0	100,9	101,4	0,000	0,171	0,179	82	0,274
17,812	540,836	540,3	542,3	0,0	99,9	100,3	0,000	0,171	0,179	83	0,276
17,808	540,862	540,3	542,3	0,0	99,9	100,5	0,000	0,171	0,179	84	0,276
17,748	540,859	540,3	542,3	0,0	100,2	100,6	0,000	0,171	0,179	85	0,275
17,687	540,876	540,3	542,3	0,0	100,5	101,2	0,000	0,170	0,179	86	0,274
17,565	540,902	540,3	542,3	0,0	101,3	101,7	0,000	0,171	0,179	87	0,273
17,682	540,921	540,3	542,3	0,0	100,6	101,0	0,000	0,171	0,179	88	0,274
17,801	540,923	540,4	542,4	0,0	99,8	100,4	0,000	0,171	0,179	89	0,276
17,504	540,950	540,4	542,4	0,0	101,6	102,1	0,000	0,171	0,179	90	0,272
17,800	540,961	540,4	542,4	0,0	99,8	100,5	0,000	0,171	0,179	91	0,276
17,739	540,989	540,4	542,4	0,0	100,0	100,6	0,000	0,170	0,179	92	0,275
17,556	541,004	540,4	542,4	0,0	101,1	101,9	0,000	0,170	0,179	93	0,273
17,492	541,005	540,4	542,4	0,0	101,4	102,1	0,000	0,170	0,179	94	0,272
17,729	541,011	540,5	542,4	0,0	100,1	100,6	0,000	0,170	0,179	95	0,275
17,662	541,015	540,6	542,4	0,0	100,3	100,9	0,000	0,170	0,179	96	0,274
17,577	540,996	540,6	542,4	0,0	100,9	101,3	0,000	0,171	0,179	97	0,273
17,777	541,003	540,6	542,4	0,0	99,9	100,1	0,000	0,171	0,179	98	0,276
17,653	541,030	540,6	542,4	0,0	100,5	100,8	0,000	0,171	0,179	99	0,274
17,761	541,034	540,6	542,4	0,0	99,6	100,2	0,000	0,171	0,179	100	0,276
17,767	541,039	540,6	542,5	0,0	99,7	100,3	0,000	0,171	0,179	101	0,276
17,648	541,058	540,5	542,5	0,0	100,5	100,8	0,000	0,171	0,179	102	0,274
17,646	541,067	540,5	542,5	0,0	100,3	100,9	0,000	0,171	0,179	103	0,274
17,760	541,048	540,5	542,5	0,0	99,5	100,4	0,000	0,171	0,179	104	0,276
17,878	541,047	540,6	542,5	0,0	98,9	99,6	0,000	0,170	0,179	105	0,278
17,876	541,036	540,6	542,5	0,0	99,0	99,5	0,000	0,171	0,179	106	0,278
17,693	541,029	540,6	542,5	0,0	99,7	100,4	0,000	0,170	0,179	107	0,275
17,571	541,039	540,6	542,5	0,0	100,5	101,3	0,000	0,170	0,179	108	0,273
17,753	541,037	540,7	542,6	0,0	99,6	100,2	0,000	0,171	0,179	109	0,276
17,693	541,046	540,7	542,6	0,0	99,9	100,6	0,000	0,171	0,179	110	0,275
17,604	541,035	540,7	542,6	0,0	100,3	100,7	0,000	0,170	0,179	111	0,274
17,625	541,040	540,7	542,6	0,0	100,3	100,8	0,000	0,171	0,179	112	0,274
17,636	541,022	540,7	542,6	0,0	100,0	100,7	0,000	0,171	0,179	113	0,275
17,627	541,037	540,7	542,6	0,0	100,0	100,8	0,000	0,170	0,179	114	0,274
17,565	541,015	540,7	542,6	0,0	100,3	101,1	0,000	0,170	0,179	115	0,273
17,679	541,036	540,7	542,6	0,0	99,7	100,4	0,000	0,170	0,179	116	0,275
17,779	541,016	540,7	542,6	0,0	99,1	99,7	0,000	0,170	0,179	117	0,277
17,499	541,034	540,7	542,6	0,0	101,0	101,5	0,000	0,171	0,179	118	0,273
17,736	541,026	540,7	542,6	0,0	99,8	99,8	0,000	0,171	0,179	119	0,276
17,795	541,027	540,7	542,6	0,0	99,1	99,6	0,000	0,171	0,179	120	0,277
17,796	541,034	540,7	542,6	0,0	99,2	99,6	0,000	0,171	0,179	121	0,277
17,614	541,008	540,8	542,6	0,0	100,1	100,6	0,000	0,171	0,179	122	0,274
17,607	541,001	540,8	542,6	0,0	100,0	100,5	0,000	0,170	0,179	123	0,274
17,719	540,987	540,7	542,6	0,0	99,5	100,1	0,000	0,171	0,179	124	0,276
17,743	540,985	540,7	542,6	0,0	99,6	99,6	0,000	0,171	0,179	125	0,276
17,733	540,982	540,7	542,6	0,0	99,6	100,0	0,000	0,171	0,179	126	0,276
17,671	540,982	540,7	542,6	0,0	99,6	100,3	0,000	0,171	0,179	127	0,275
17,669	540,996	540,7	542,6	0,0	99,7	100,4	0,000	0,170	0,179	128	0,275
17,723	540,995	540,7	542,6	0,0	99,5	100,1	0,000	0,170	0,179	129	0,276
17,732	541,008	540,7	542,6	0,0	99,6	100,0	0,000	0,171	0,179	130	0,276
17,576	541,007	540,7	542,6	0,0	100,3	100,8	0,000	0,171	0,179	131	0,274
17,664	541,000	540,7	542,6	0,0	99,9	100,3	0,000	0,171	0,179	132	0,275
17,841	540,990	540,7	542,6	0,0	98,9	99,2	0,000	0,171	0,179	133	0,278
17,665	540,978	540,7	542,6	0,0	99,8	100,4	0,000	0,171	0,179	134	0,275
17,665	540,979	540,7	542,7	0,0	99,8	100,4	0,000	0,170	0,179	135	0,275
17,487	540,990	540,8	542,7	0,0	100,9	101,5	0,000	0,171	0,179	136	0,273
17,731	540,989	540,8	542,7	0,0	99,4	99,9	0,000	0,171	0,179	137	0,276
17,630	540,983	540,8	542,6	0,0	99,7	99,3	0,000	0,171	0,179	138	0,278
17,603	540,977	540,8	542,6	0,0	100,2	100,6	0,000	0,171	0,179	139	0,274
17,476	540,996	540,8	542,6	0,0	100,9	101,2	0,000	0,171	0,179	140	0,273
17,782	540,992	540,8	542,6	0,0	99,0	99,7	0,000	0,171	0,179	141	0,277
17,776	541,004	540,8	542,6	0,0	99,0	99,4	0,000	0,171	0,179	142	0,277
17,594	541,027	540,7	542,6	0,0	100,0	100,5	0,000	0,171	0,179	143	0,274
17,713	541,035	540,8	542,7	0,0	99,4	100,0	0,000	0,171	0,179	144	0,276
17,773	541,034	540,8	542,7	0,0	98,8	99,5	0,000	0,170	0,179	145	0,277
17,829	541,043	540,8	542,7	0,0	98,7	99,3	0,000	0,170	0,179	146	0,278
17,824	541,069	540,8	542,7	0,0	98,6	99,2	0,000	0,171	0,179	147	0,278
17,712	541,066	540,8	542,7	0,0	99,2	99,8	0,000	0,170	0,179	148	0,276
17,656	541,053	540,8	542,7	0,0	99,8	100,0	0,000	0,170	0,179	149	0,275
17,652	541,065	540,8	542,7	0,0	99,7	100,1	0,000	0,171	0,179	150	0,275
17,763	541,038	541,0	542,7	0,0	99,0	99,3	0,000	0,171	0,179	151	0,277
17,765	541,017	541,0	542,7	0,0	99,0	99,6	0,000	0,171	0,179	152	0,277
17,821	541,023	541,0	542,6	0,0	98,6	99,3	0,000	0,171	0,179	153	0,278
17,699	541,009	540,9	542,7	0,0	99,3	100,0	0,000	0,170	0,179	154	0,276
17,707	541,008	540,8	542,7	0,0	99,3	99,9	0,000	0,171	0,179	155	0,276
17,595	541,031	540,8	542,7	0,0	100,1	100,6	0,000	0,171	0,179	156	0,274
17,588	541,039	540,8	542,7	0,0	99,9	100,4	0,000	0,171	0,179	157	0,274
17,693	541,062	540,9	542,8	0,0	99,5	99,5	0,000	0,171	0,179	158	0,276
17,639	541,096	540,8	542,7	0,0	99,4	100,1	0,000	0,170	0,179	159	0,275
17,938	541,126	540,9	542,8	0,0	97,9	98,6	0,000	0,170	0,179	160	0,280
17,590	541,114	540,9	542,8	0,0	100,0	100,7	0,000	0,170	0,179	161	0,274
17,711	541,148	540,9	542,8	0,0	99,2	99,9	0,000	0,171	0,179	162	0,276
17,830	541,138	540,9	542,8	0,0	98,6	99,3	0,000	0,170	0,179	163	0,278
17,652	541,125	540,9	542,8	0,0	99,9	100,0	0,000	0,171	0,179	164	0,275

17,536	541,140	540,9	542,8	0,0	100,5	100,6	0,000	0,171	0,179	165	0,274
17,707	541,130	541,0	542,9	0,0	99,3	99,7	0,000	0,171	0,179	166	0,276
17,702	541,149	540,9	542,8	0,0	99,3	99,6	0,000	0,171	0,179	167	0,276
17,704	541,152	540,9	542,8	0,0	99,4	99,8	0,000	0,171	0,179	168	0,276
17,763	541,109	540,9	542,8	0,0	99,0	99,5	0,000	0,171	0,179	169	0,277
17,639	541,110	540,9	542,8	0,0	99,3	100,0	0,000	0,170	0,179	170	0,275
17,589	541,093	540,9	542,8	0,0	100,0	100,4	0,000	0,170	0,179	171	0,274
17,419	541,121	540,9	542,8	0,0	100,9	101,7	0,000	0,171	0,179	172	0,272
17,708	541,118	540,9	542,8	0,0	99,4	100,0	0,000	0,171	0,179	173	0,276
17,586	541,138	540,9	542,8	0,0	100,0	100,5	0,000	0,171	0,179	174	0,274
17,631	541,141	540,9	542,9	0,0	99,7	100,4	0,000	0,171	0,179	175	0,275
17,609	541,136	540,9	542,9	0,0	100,0	100,4	0,000	0,171	0,179	176	0,275
17,647	541,150	541,0	542,9	0,0	99,5	99,9	0,000	0,171	0,179	177	0,275
17,824	541,174	541,0	542,9	0,0	98,7	99,1	0,000	0,171	0,179	178	0,278
17,580	541,187	541,0	542,9	0,0	99,9	100,6	0,000	0,171	0,179	179	0,274
17,644	541,201	541,0	543,0	0,0	99,7	100,0	0,000	0,171	0,179	180	0,275
17,694	541,196	541,0	543,0	0,0	99,1	99,8	0,000	0,171	0,179	181	0,276
17,577	541,208	541,0	543,0	0,0	100,1	100,2	0,000	0,171	0,179	182	0,274
17,578	541,226	541,1	543,1	0,0	99,9	100,4	0,000	0,171	0,179	183	0,274
17,642	541,228	541,1	543,1	0,0	99,5	100,0	0,000	0,170	0,179	184	0,275
17,756	541,219	541,1	543,0	0,0	98,9	99,0	0,000	0,170	0,178	185	0,277
17,812	541,228	541,1	543,0	0,0	98,8	99,1	0,000	0,171	0,178	186	0,278
17,704	541,226	541,1	543,0	0,0	99,4	99,7	0,000	0,171	0,179	187	0,276
17,643	541,228	541,1	543,0	0,0	99,5	100,2	0,000	0,171	0,179	188	0,275
17,648	541,214	541,1	543,0	0,0	99,5	100,3	0,000	0,170	0,179	189	0,275
17,750	541,211	541,2	543,0	0,0	99,1	99,6	0,000	0,170	0,179	190	0,277
17,635	541,220	541,2	543,0	0,0	99,6	100,4	0,000	0,171	0,179	191	0,275
17,581	541,233	541,2	543,0	0,0	99,9	100,3	0,000	0,170	0,179	192	0,274
17,465	541,214	541,2	543,0	0,0	100,6	101,1	0,000	0,170	0,179	193	0,273
17,748	541,218	541,1	543,0	0,0	99,1	99,6	0,000	0,171	0,179	194	0,277
17,706	541,215	541,1	543,0	0,0	99,3	99,7	0,000	0,171	0,179	195	0,276
17,759	541,205	541,1	543,0	0,0	98,9	99,4	0,000	0,171	0,179	196	0,277
17,669	541,200	541,1	543,0	0,0	99,3	99,7	0,000	0,170	0,179	197	0,276
17,697	541,227	541,1	543,0	0,0	99,1	99,7	0,000	0,170	0,179	198	0,276
17,635	541,220	541,1	543,0	0,0	99,3	99,7	0,000	0,170	0,179	199	0,275
17,694	541,228	541,1	543,0	0,0	99,3	99,6	0,000	0,170	0,178	200	0,276
17,754	541,235	541,1	543,0	0,0	98,8	99,5	0,000	0,171	0,179	201	0,277
17,630	541,242	541,1	543,0	0,0	99,6	100,0	0,000	0,171	0,179	202	0,275
17,757	541,240	541,1	543,0	0,0	98,7	99,3	0,000	0,170	0,179	203	0,277
17,574	541,241	541,1	543,1	0,0	99,8	100,4	0,000	0,170	0,179	204	0,274
17,518	541,252	541,2	543,1	0,0	100,0	100,7	0,000	0,170	0,179	205	0,273
17,756	541,263	541,2	543,1	0,0	98,9	99,3	0,000	0,170	0,179	206	0,277
17,583	541,262	541,2	543,1	0,0	99,6	100,0	0,000	0,170	0,179	207	0,275
17,693	541,242	541,2	543,1	0,0	99,2	99,6	0,000	0,170	0,179	208	0,276
17,517	541,250	541,2	543,1	0,0	100,0	100,8	0,000	0,170	0,179	209	0,273
17,696	541,232	541,2	543,1	0,0	99,3	99,7	0,000	0,170	0,179	210	0,276
17,635	541,240	541,2	543,1	0,0	98,6	98,6	0,000	0,171	0,179	211	0,278
17,635	541,218	541,2	543,1	0,0	99,6	100,0	0,000	0,171	0,179	212	0,275
17,693	541,225	541,3	543,1	0,0	99,3	99,7	0,000	0,171	0,179	213	0,276
17,721	541,205	541,3	543,1	0,0	99,0	99,6	0,000	0,170	0,179	214	0,277
17,698	541,181	541,4	543,1	0,0	99,1	99,8	0,000	0,170	0,179	215	0,276
17,645	541,188	541,4	543,1	0,0	99,6	99,9	0,000	0,170	0,179	216	0,275
17,751	541,165	541,5	543,1	0,0	98,6	99,3	0,000	0,170	0,179	217	0,277
17,426	541,169	541,4	543,1	0,0	100,7	101,2	0,000	0,170	0,179	218	0,272
17,701	541,177	541,3	543,1	0,0	99,1	99,8	0,000	0,170	0,179	219	0,276
17,699	541,191	541,3	543,1	0,0	99,4	99,9	0,000	0,171	0,179	220	0,276
17,701	541,187	541,3	543,2	0,0	99,2	99,7	0,000	0,171	0,179	221	0,276
17,589	460,000	541,3	543,1	0,0	99,7	100,4	0,000	0,170	0,179	222	0,275

Average	Average	Average	Average								Average
17,39	Inlet +	Inlet +	Inlet +								0,273
	Outlet	Outlet	Outlet	Average	Average	Average	# 1st Hr	#1	#2		
Tunnel	Temp.	Temp.	Temp.	96,09	102,85	102,03	System 1st Hr	System 1	System 2		SQRT
Velocity	Meter 1st Hr	Meter 1	Meter 2	Proportional Rates			Vol.Std.	Vol.Std.	Vol.Std.		Delta-P
				PR1at hour	PR1	PR2				Time	
Ft/Sec	Deg. R	Deg. R	Deg. R	%	%	%	(ft3)	(ft3)	(ft3)	min	(In H2O)2
17,995	532,789	531,6	532,0				0,181	0,171	0,180	0	0,275
17,602	532,848	531,6	532,0	96,2	103,0	102,3	0,181	0,171	0,179	1	0,274
17,342	532,879	531,5	532,0	97,0	103,9	103,3	0,181	0,171	0,179	2	0,271
17,230	532,913	531,5	532,1	98,1	105,0	104,6	0,181	0,171	0,179	3	0,269
17,166	532,938	531,5	532,2	98,4	105,7	104,9	0,181	0,171	0,180	4	0,268
17,250	532,973	531,6	532,3	97,6	104,5	103,9	0,181	0,171	0,180	5	0,270
17,380	533,006	531,6	532,3	96,4	103,2	102,7	0,181	0,171	0,180	6	0,272
17,411	533,006	531,6	532,4	95,9	102,9	102,5	0,181	0,171	0,180	7	0,273
17,490	533,025	531,6	532,5	95,4	102,5	101,7	0,181	0,171	0,180	8	0,274
17,316	532,993	531,6	532,6	96,5	103,6	102,7	0,181	0,171	0,179	9	0,272
17,263	532,983	531,7	532,7	96,8	103,9	103,2	0,181	0,171	0,179	10	0,271
17,299	532,931	531,7	532,7	96,4	103,4	102,7	0,181	0,171	0,180	11	0,271
17,601	532,917	531,7	532,8	94,8	101,7	101,0	0,181	0,171	0,179	12	0,276
17,362	532,915	531,7	532,8	96,2	103,1	102,3	0,181	0,171	0,179	13	0,272
17,292	532,905	531,7	533,0	96,4	103,4	102,8	0,181	0,171	0,179	14	0,272
17,238	532,882	531,7	533,0	96,8	103,7	103,1	0,181	0,171	0,179	15	0,271
17,229	532,855	531,7	533,1	96,7	103,5	103,1	0,181	0,171	0,180	16	0,271
17,282	532,844	531,8	533,2	96,3	103,4	102,5	0,181	0,171	0,179	17	0,272
17,462	532,830	531,8	533,2	95,4	102,4	101,5	0,181	0,171	0,179	18	0,274
17,346	532,826	531,8	533,3	96,1	103,0	102,2	0,181	0,171	0,179	19	0,272
17,518	532,828	531,9	533,4	95,0	101,9	101,4	0,181	0,171	0,179	20	0,275
17,588	532,811	531,9	533,5	94,7	101,6	100,8	0,181	0,171	0,179	21	0,276
17,405	532,786	531,9	533,5	95,7	102,6	101,8	0,181	0,171	0,179	22	0,273
17,537	532,759	531,9	533,6	95,2	102,1	101,3	0,181	0,171	0,179	23	0,275
17,286	532,758	531,9	533,6	96,3	103,3	102,5	0,181	0,171	0,179	24	0,272
17,158	532,769	531,9	533,7	97,0	103,9	103,5	0,181	0,171	0,179	25	0,270
17,338	532,762	531,9	533,8	96,0	102,9	102,0	0,181	0,171	0,179	26	0,272
17,393	532,762	531,9	533,9	95,5	102,6	101,7	0,181	0,171	0,179	27	0,273
17,210	532,749	532,0	534,0	96,6	103,8	102,6	0,181	0,171	0,179	28	0,271
17,252	532,727	532,0	534,0	96,5	103,4	102,6	0,181	0,171	0,179	29	0,271
17,394	532,700	532,1	534,1	95,5	102,5	101,6	0,181	0,171	0,179	30	0,273
17,451	532,699	532,2	534,2	95,3	102,1	101,3	0,181	0,171	0,179	31	0,274
17,507	532,734	532,2	534,2	95,0	101,8	100,9	0,181	0,171	0,179	32	0,275
17,284	532,735	532,2	534,3	96,3	103,4	102,6	0,181	0,171	0,179	33	0,272
17,580	532,739	532,3	534,4	94,7	101,4	100,5	0,181	0,171	0,179	34	0,276
17,175	532,752	532,3	534,5	96,9	104,0	102,9	0,181	0,171	0,179	35	0,270
17,571	532,763	532,3	534,5	94,7	101,6	100,5	0,181	0,171	0,179	36	0,276
17,410	532,758	532,3	534,6	95,8	102,7	101,7	0,181	0,171	0,179	37	0,273
17,343	532,747	532,3	534,6	96,2	103,1	101,8	0,181	0,171	0,179	38	0,272
17,351	532,755	532,4	534,7	96,1	102,9	102,2	0,181	0,171	0,179	39	0,272
17,586	532,733	532,4	534,7	94,8	101,5	100,5	0,181	0,171	0,179	40	0,276
17,333	532,721	532,4	534,8	95,9	102,7	102,1	0,181	0,171	0,179	41	0,272
17,393	532,735	532,5	534,8	95,6	102,4	101,8	0,181	0,171	0,179	42	0,273
17,284	532,692	532,4	534,8	96,4	103,1	102,2	0,181	0,170	0,179	43	0,272
17,334	532,662	532,5	534,8	96,3	103,1	102,2	0,181	0,171	0,179	44	0,272
17,354	532,666	532,4	534,8	96,1	102,9	102,2	0,181	0,171	0,179	45	0,272
17,292	532,624	532,4	534,8	96,5	103,5	102,7	0,181	0,171	0,179	46	0,272
17,423	532,631	532,4	534,9	95,9	103,0	101,7	0,181	0,171	0,179	47	0,273
17,184	532,654	532,4	534,9	97,2	104,2	103,2	0,181	0,171	0,179	48	0,270
17,429	532,639	532,5	534,9	95,8	102,7	101,7	0,181	0,171	0,179	49	0,273
17,491	532,626	532,5	535,0	95,7	102,2	101,6	0,182	0,171	0,179	50	0,274
17,260	532,619	532,5	535,0	96,8	103,7	102,7	0,181	0,171	0,179	51	0,271
17,429	532,609	532,5	535,0	95,8	102,7	101,9	0,181	0,171	0,179	52	0,273
17,490	532,624	532,5	535,0	95,5	102,5	101,3	0,181	0,171	0,179	53	0,274
17,361	532,611	532,6	535,1	96,2	103,0	101,9	0,181	0,171	0,179	54	0,272
17,475	532,595	532,6	535,1	95,5	102,2	101,4	0,181	0,171	0,179	55	0,274
17,298	532,595	532,6	535,1	96,5	103,4	102,4	0,181	0,171	0,179	56	0,272
17,337	532,603	532,7	535,2	96,5	103,1	102,0	0,182	0,171	0,179	57	0,272
17,376	532,653	532,7	535,2	96,3	103,1	102,2	0,181	0,171	0,179	58	0,272
17,494	532,674	532,6	535,2	95,7	102,4	101,3	0,182	0,171	0,179	59	0,274
17,194	532,670	532,6	535,2	0,0	104,0	103,3	0,000	0,171	0,179	60	0,270
17,623	532,528	532,6	535,3	0,0	101,9	100,7	0,000	0,171	0,179	61	0,276
17,265	532,430	532,6	535,3	0,0	104,0	102,9	0,000	0,171	0,179	62	0,271
17,318	532,392	532,7	535,2	0,0	103,4	102,5	0,000	0,171	0,179	63	0,272
17,386	532,352	532,7	535,2	0,0	103,2	102,2	0,000	0,171	0,179	64	0,272
17,316	532,338	532,7	535,1	0,0	103,5	102,5	0,000	0,171	0,179	65	0,272
17,613	532,323	532,7	535,1	0,0	102,0	101,1	0,000	0,171	0,179	66	0,276
17,602	532,310	532,7	535,1	0,0	101,7	100,9	0,000	0,171	0,179	67	0,276
17,382	532,307	532,7	535,1	0,0	103,2	102,1	0,000	0,171	0,179	68	0,272
17,561	532,310	532,7	535,1	0,0	102,3	101,3	0,000	0,171	0,179	69	0,275
17,503	532,307	532,6	535,1	0,0	102,5	101,6	0,000	0,171	0,179	70	0,274
17,410	532,278	532,7	535,1	0,0	102,8	102,1	0,000	0,171	0,179	71	0,273
17,534	532,262	532,8	535,1	0,0	101,9	101,3	0,000	0,170	0,179	72	0,275
17,371	532,224	532,8	535,0	0,0	103,0	102,2	0,000	0,170	0,179	73	0,272
17,499	532,203	532,7	535,0	0,0	102,5	101,6	0,000	0,171	0,179	74	0,274
17,498	532,170	532,7	535,0	0,0	102,4	101,6	0,000	0,171	0,179	75	0,274
17,380	532,176	532,8	534,9	0,0	103,2	102,1	0,000	0,171	0,179	76	0,272
17,261	532,148	532,7	534,9	0,0	103,7	103,2	0,000	0,171	0,179	77	0,271
17,385	532,119	532,7	534,9	0,0	103,1	102,3	0,000	0,171	0,179	78	0,272

17,278	532,106	532,7	534,9	0,0	104,0	103,2	0,000	0,171	0,179	79	0,271
17,385	532,112	532,7	534,9	0,0	103,2	102,2	0,000	0,171	0,179	80	0,272
17,155	532,124	532,7	534,9	0,0	104,8	103,9	0,000	0,171	0,179	81	0,269
17,101	532,114	532,7	534,9	0,0	104,9	104,0	0,000	0,171	0,179	82	0,268
17,526	532,107	532,7	534,9	0,0	102,6	102,0	0,000	0,171	0,179	83	0,274
17,413	532,097	532,7	534,9	0,0	103,0	102,6	0,000	0,170	0,179	84	0,272
17,413	532,086	532,7	534,9	0,0	103,1	102,5	0,000	0,170	0,179	85	0,272
17,297	532,082	532,8	534,9	0,0	104,1	103,0	0,000	0,171	0,179	86	0,271
17,290	532,077	532,9	535,0	0,0	104,2	103,0	0,000	0,171	0,179	87	0,271
17,408	532,083	532,9	535,0	0,0	103,0	102,1	0,000	0,171	0,179	88	0,272
17,230	532,065	533,0	535,0	0,0	104,5	103,5	0,000	0,171	0,179	89	0,270
17,294	532,084	533,0	535,0	0,0	104,1	103,1	0,000	0,171	0,179	90	0,271
17,475	532,082	533,0	535,0	0,0	102,9	101,7	0,000	0,171	0,179	91	0,273
17,543	532,083	533,0	535,0	0,0	102,5	102,0	0,000	0,171	0,179	92	0,274
17,421	532,072	533,0	535,0	0,0	103,3	102,6	0,000	0,171	0,179	93	0,272
17,557	532,077	533,0	535,0	0,0	102,6	101,6	0,000	0,171	0,179	94	0,275
17,362	532,088	533,0	535,0	0,0	103,8	102,9	0,000	0,171	0,179	95	0,272
17,246	532,121	533,0	535,0	0,0	104,4	103,7	0,000	0,171	0,179	96	0,270
17,499	532,113	533,1	535,0	0,0	102,9	102,0	0,000	0,171	0,179	97	0,274
17,312	532,124	533,1	535,0	0,0	104,2	103,4	0,000	0,171	0,179	98	0,271
17,481	532,131	533,0	535,0	0,0	103,0	102,2	0,000	0,171	0,179	99	0,273
17,545	532,133	533,1	535,0	0,0	102,6	101,7	0,000	0,171	0,179	100	0,274
17,368	532,121	533,1	535,0	0,0	103,6	102,9	0,000	0,170	0,179	101	0,272
17,252	532,134	533,1	535,0	0,0	104,6	103,8	0,000	0,171	0,179	102	0,270
17,480	532,145	533,1	535,0	0,0	103,0	102,1	0,000	0,171	0,179	103	0,273
17,241	532,141	533,2	535,0	0,0	104,4	103,5	0,000	0,171	0,179	104	0,270
17,368	532,145	533,2	535,0	0,0	103,6	102,9	0,000	0,170	0,179	105	0,272
17,304	532,162	533,2	535,0	0,0	104,0	103,2	0,000	0,170	0,179	106	0,271
17,366	532,168	533,2	535,0	0,0	103,7	102,8	0,000	0,171	0,179	107	0,272
17,295	532,187	533,2	535,0	0,0	104,0	103,3	0,000	0,171	0,179	108	0,270
17,557	532,192	533,2	535,0	0,0	102,8	102,0	0,000	0,171	0,179	109	0,274
17,376	532,211	533,1	535,0	0,0	103,6	102,9	0,000	0,171	0,179	110	0,272
17,311	532,228	533,1	535,1	0,0	103,8	103,0	0,000	0,170	0,179	111	0,271
17,603	532,245	533,1	535,1	0,0	102,4	101,6	0,000	0,170	0,179	112	0,275
17,446	532,282	533,1	535,1	0,0	103,5	102,7	0,000	0,171	0,179	113	0,272
17,392	532,286	533,1	535,1	0,0	103,8	102,9	0,000	0,171	0,179	114	0,272
17,324	532,305	533,1	535,2	0,0	104,4	103,4	0,000	0,171	0,179	115	0,271
17,497	532,314	533,2	535,2	0,0	103,2	102,0	0,000	0,171	0,179	116	0,273
17,507	532,333	533,1	535,2	0,0	102,9	102,0	0,000	0,171	0,179	117	0,274
17,354	532,347	533,1	535,2	0,0	103,9	102,9	0,000	0,171	0,179	118	0,271
17,437	532,357	533,2	535,2	0,0	103,3	102,6	0,000	0,171	0,179	119	0,272
17,239	532,358	533,2	535,2	0,0	104,4	103,5	0,000	0,171	0,179	120	0,270
17,430	532,360	533,3	535,2	0,0	103,3	102,6	0,000	0,171	0,179	121	0,272
17,423	532,373	533,3	535,2	0,0	103,3	102,5	0,000	0,171	0,179	122	0,272
17,391	532,393	533,3	535,2	0,0	103,8	102,9	0,000	0,171	0,179	123	0,272
17,619	532,408	533,3	535,2	0,0	102,3	101,5	0,000	0,170	0,179	124	0,275
17,299	532,432	533,3	535,2	0,0	104,2	103,3	0,000	0,170	0,179	125	0,270
17,573	532,446	533,2	535,2	0,0	102,7	101,8	0,000	0,170	0,179	126	0,274
17,513	532,468	533,1	535,2	0,0	103,2	102,4	0,000	0,171	0,179	127	0,273
17,328	532,485	533,1	535,2	0,0	104,1	103,5	0,000	0,171	0,179	128	0,271
17,389	532,490	533,2	535,2	0,0	103,8	102,9	0,000	0,171	0,179	129	0,272
17,444	532,510	533,2	535,2	0,0	103,5	102,7	0,000	0,171	0,179	130	0,273
17,386	532,533	533,1	535,2	0,0	103,8	102,9	0,000	0,171	0,179	131	0,272
17,567	532,536	533,1	535,2	0,0	103,0	102,0	0,000	0,171	0,179	132	0,274
17,267	532,548	533,1	535,2	0,0	104,5	103,8	0,000	0,171	0,179	133	0,270
17,394	532,555	533,2	535,2	0,0	103,9	103,1	0,000	0,171	0,179	134	0,272
17,385	532,562	533,2	535,2	0,0	103,9	103,1	0,000	0,171	0,179	135	0,272
17,503	532,580	533,3	535,3	0,0	103,0	102,2	0,000	0,171	0,179	136	0,273
17,301	532,586	533,3	535,3	0,0	103,9	103,0	0,000	0,170	0,179	137	0,271
17,558	532,593	533,4	535,3	0,0	102,7	101,9	0,000	0,171	0,179	138	0,274
17,368	532,615	533,4	535,3	0,0	103,9	102,9	0,000	0,171	0,179	139	0,271
17,440	532,624	533,5	535,3	0,0	103,1	102,6	0,000	0,170	0,179	140	0,272
17,513	532,635	533,5	535,3	0,0	103,1	102,4	0,000	0,170	0,179	141	0,273
17,266	532,644	533,4	535,3	0,0	104,5	103,7	0,000	0,171	0,179	142	0,270
17,256	532,660	533,4	535,3	0,0	104,5	103,4	0,000	0,171	0,179	143	0,270
17,346	532,656	533,4	535,3	0,0	104,0	103,4	0,000	0,171	0,179	144	0,271
17,202	532,685	533,4	535,3	0,0	104,9	104,1	0,000	0,171	0,179	145	0,269
17,434	532,665	533,4	535,3	0,0	103,4	102,6	0,000	0,171	0,179	146	0,272
17,389	532,692	533,3	535,3	0,0	103,7	103,0	0,000	0,171	0,179	147	0,272
17,405	532,693	533,4	535,4	0,0	103,8	103,1	0,000	0,171	0,179	148	0,272
17,444	532,709	533,4	535,4	0,0	103,5	102,8	0,000	0,171	0,179	149	0,272
17,447	532,720	533,5	535,4	0,0	103,4	102,7	0,000	0,171	0,179	150	0,272
17,335	532,742	533,5	535,4	0,0	104,1	103,2	0,000	0,170	0,179	151	0,271
17,572	532,746	533,5	535,4	0,0	102,7	101,9	0,000	0,170	0,179	152	0,274
17,572	532,762	533,5	535,4	0,0	102,6	102,1	0,000	0,170	0,179	153	0,274
17,435	532,779	533,6	535,4	0,0	103,1	102,4	0,000	0,170	0,179	154	0,272
17,313	532,770	533,6	535,4	0,0	103,9	103,3	0,000	0,170	0,179	155	0,271
17,613	532,787	533,7	535,4	0,0	102,2	101,5	0,000	0,170	0,179	156	0,275
17,539	532,807	533,7	535,4	0,0	102,4	101,8	0,000	0,170	0,179	157	0,274
17,380	532,808	533,7	535,4	0,0	103,7	102,8	0,000	0,170	0,179	158	0,272
17,378	532,814	533,7	535,4	0,0	103,6	102,8	0,000	0,170	0,179	159	0,272
17,462	532,824	533,6	535,4	0,0	103,1	102,3	0,000	0,170	0,179	160	0,273
17,441	532,831	533,6	535,4	0,0	103,3	102,6	0,000	0,170	0,179	161	0,273
17,555	532,828	533,6	535,5	0,0	102,6	101,9	0,000	0,170	0,179	162	0,274
17,386	532,869	533,6	535,5	0,0	103,9	103,0	0,000	0,171	0,179	163	0,272
17,562	532,865	533,6	535,5	0,0	102,6	101,8	0,000	0,171	0,179	164	0,274

17,252	532,866	533,6	535,5	0,0	104,6	103,8	0,000	0,171	0,179	165	0,270
17,370	532,886	533,6	535,5	0,0	103,7	102,9	0,000	0,171	0,179	166	0,272
17,317	532,876	533,6	535,5	0,0	104,1	103,3	0,000	0,171	0,179	167	0,271
17,553	532,889	533,7	535,5	0,0	102,8	101,9	0,000	0,171	0,179	168	0,274
17,618	532,904	533,7	535,5	0,0	102,2	101,5	0,000	0,171	0,179	169	0,275
17,385	532,910	533,6	535,5	0,0	103,8	103,0	0,000	0,171	0,179	170	0,272
17,593	532,921	533,6	535,6	0,0	102,3	101,4	0,000	0,171	0,179	171	0,275
17,657	532,926	533,7	535,6	0,0	101,9	101,0	0,000	0,171	0,179	172	0,276
17,358	532,940	533,7	535,6	0,0	103,6	102,6	0,000	0,171	0,179	173	0,272
17,467	532,937	533,8	535,6	0,0	103,3	102,3	0,000	0,171	0,179	174	0,273
17,184	532,968	533,7	535,6	0,0	104,7	103,8	0,000	0,171	0,179	175	0,269
17,366	532,971	533,7	535,6	0,0	103,4	102,9	0,000	0,170	0,179	176	0,272
17,489	532,984	533,7	535,6	0,0	102,8	101,9	0,000	0,170	0,179	177	0,273
17,398	532,994	533,7	535,6	0,0	103,3	102,2	0,000	0,170	0,179	178	0,272
17,311	533,014	533,7	535,6	0,0	104,1	103,1	0,000	0,171	0,179	179	0,271
17,370	533,017	533,8	535,6	0,0	103,8	102,7	0,000	0,171	0,179	180	0,272
17,372	533,031	533,8	535,7	0,0	103,6	102,7	0,000	0,171	0,179	181	0,272
17,603	533,033	533,8	535,6	0,0	102,4	101,2	0,000	0,171	0,179	182	0,275
17,654	533,046	533,8	535,6	0,0	101,7	100,9	0,000	0,171	0,179	183	0,276
17,660	533,044	533,8	535,6	0,0	101,7	100,8	0,000	0,170	0,179	184	0,276
17,542	533,046	533,8	535,6	0,0	102,5	101,6	0,000	0,170	0,179	185	0,274
17,534	533,055	533,9	535,6	0,0	102,4	101,6	0,000	0,170	0,179	186	0,274
17,182	533,046	533,9	535,6	0,0	104,6	104,1	0,000	0,170	0,179	187	0,269
17,417	533,053	533,9	535,6	0,0	103,1	102,4	0,000	0,170	0,179	188	0,272
17,223	533,038	533,9	535,6	0,0	104,0	103,4	0,000	0,170	0,179	189	0,270
17,394	533,046	533,9	535,6	0,0	103,2	102,3	0,000	0,170	0,179	190	0,272
17,281	533,041	534,0	535,6	0,0	103,7	103,1	0,000	0,170	0,179	191	0,271
17,201	533,052	534,0	535,6	0,0	104,4	103,7	0,000	0,170	0,179	192	0,269
17,587	533,047	534,0	535,6	0,0	102,0	101,4	0,000	0,170	0,179	193	0,275
17,526	533,060	534,0	535,6	0,0	102,3	101,6	0,000	0,170	0,179	194	0,274
17,642	533,073	533,9	535,6	0,0	101,7	100,9	0,000	0,170	0,179	195	0,276
17,342	533,090	534,0	535,6	0,0	103,6	102,6	0,000	0,171	0,179	196	0,272
17,620	533,088	534,0	535,6	0,0	101,8	100,9	0,000	0,171	0,179	197	0,276
17,220	533,108	534,0	535,6	0,0	104,3	103,5	0,000	0,171	0,179	198	0,270
17,336	533,113	534,0	535,6	0,0	103,5	102,7	0,000	0,171	0,179	199	0,272
17,458	533,129	533,9	535,6	0,0	102,7	102,0	0,000	0,170	0,179	200	0,273
17,456	533,139	533,9	535,6	0,0	102,7	101,9	0,000	0,170	0,179	201	0,273
17,214	533,145	533,9	535,6	0,0	104,0	103,4	0,000	0,170	0,179	202	0,270
17,504	533,130	533,9	535,6	0,0	102,2	101,5	0,000	0,170	0,179	203	0,274
17,392	533,145	533,8	535,6	0,0	102,9	102,5	0,000	0,170	0,179	204	0,272
17,405	533,153	533,7	535,6	0,0	103,2	102,3	0,000	0,170	0,179	205	0,272
17,273	533,144	533,8	535,6	0,0	103,8	102,8	0,000	0,171	0,179	206	0,271
17,197	533,146	533,8	535,7	0,0	104,0	103,2	0,000	0,171	0,179	207	0,270
17,492	533,153	533,9	535,7	0,0	102,4	101,4	0,000	0,171	0,179	208	0,274
17,442	533,155	534,0	535,6	0,0	102,6	101,6	0,000	0,171	0,179	209	0,273
17,492	533,161	534,0	535,6	0,0	102,2	101,5	0,000	0,170	0,179	210	0,274
17,322	533,191	534,0	535,7	0,0	103,3	102,5	0,000	0,170	0,179	211	0,272
17,561	533,189	534,0	535,7	0,0	102,1	101,1	0,000	0,171	0,179	212	0,275
17,298	533,188	534,0	535,7	0,0	103,6	102,7	0,000	0,171	0,179	213	0,271
17,557	533,191	534,0	535,7	0,0	101,8	101,0	0,000	0,170	0,179	214	0,275
17,500	533,180	534,0	535,7	0,0	102,2	101,4	0,000	0,170	0,179	215	0,274
17,494	533,187	534,0	535,7	0,0	102,2	101,4	0,000	0,170	0,179	216	0,274
17,382	533,189	534,0	535,7	0,0	102,9	102,1	0,000	0,170	0,179	217	0,272
17,144	533,197	534,0	535,7	0,0	104,4	103,4	0,000	0,170	0,179	218	0,269
17,618	533,186	534,0	535,7	0,0	101,5	100,6	0,000	0,170	0,179	219	0,276
17,433	533,191	534,0	535,7	0,0	102,7	101,9	0,000	0,170	0,179	220	0,273
17,311	533,194	534,0	535,7	0,0	103,3	102,5	0,000	0,171	0,179	221	0,272
17,375	533,183	534,0	535,7	0,0	103,0	101,9	0,000	0,171	0,179	222	0,272
17,244	533,184	534,0	535,8	0,0	103,5	102,7	0,000	0,170	0,179	223	0,271
17,474	533,173	534,1	535,7	0,0	102,1	101,3	0,000	0,170	0,179	224	0,274
17,350	533,176	534,1	535,7	0,0	102,8	101,9	0,000	0,170	0,179	225	0,272
17,544	533,172	534,1	535,7	0,0	101,9	100,7	0,000	0,171	0,178	226	0,275
17,350	533,172	534,1	535,7	0,0	102,8	102,2	0,000	0,170	0,179	227	0,272
17,316	533,187	534,1	535,7	0,0	103,2	102,2	0,000	0,170	0,179	228	0,272
17,310	533,165	534,1	535,7	0,0	103,1	102,7	0,000	0,170	0,179	229	0,272
17,366	533,155	534,0	535,7	0,0	102,7	102,1	0,000	0,170	0,179	230	0,272
17,470	533,155	534,0	535,7	0,0	102,3	101,5	0,000	0,170	0,179	231	0,274
17,377	533,155	534,0	535,7	0,0	102,6	102,2	0,000	0,170	0,179	232	0,273
17,306	533,146	534,0	535,7	0,0	103,2	102,6	0,000	0,170	0,179	233	0,272
17,246	533,177	534,0	535,7	0,0	103,6	102,9	0,000	0,170	0,179	234	0,271
17,427	533,142	534,0	535,8	0,0	102,5	101,7	0,000	0,170	0,179	235	0,273
17,399	533,161	534,0	535,7	0,0	102,8	101,8	0,000	0,171	0,179	236	0,273
17,482	533,140	533,9	535,7	0,0	102,2	101,4	0,000	0,171	0,179	237	0,274
17,234	533,140	533,9	535,7	0,0	103,5	102,7	0,000	0,170	0,179	238	0,271
17,470	533,132	534,0	535,7	0,0	102,0	101,4	0,000	0,170	0,179	239	0,274
17,330	533,124	534,0	535,7	0,0	102,5	101,8	0,000	0,170	0,179	240	0,272
17,278	533,107	534,1	535,7	0,0	103,2	102,4	0,000	0,170	0,179	241	0,272
17,397	533,116	534,1	535,7	0,0	102,4	101,8	0,000	0,171	0,179	242	0,273
17,236	533,129	534,1	535,7	0,0	103,5	102,7	0,000	0,171	0,179	243	0,271
17,511	533,103	534,1	535,7	0,0	102,0	101,3	0,000	0,171	0,179	244	0,275
17,475	533,102	534,1	535,7	0,0	102,1	101,4	0,000	0,171	0,179	245	0,274
17,594	533,094	534,0	535,7	0,0	101,5	100,5	0,000	0,170	0,179	246	0,276
17,471	533,083	534,0	535,7	0,0	102,1	101,2	0,000	0,170	0,179	247	0,274
17,473	533,089	534,0	535,7	0,0	102,2	101,4	0,000	0,171	0,179	248	0,274
17,455	533,083	534,0	535,7	0,0	102,3	101,3	0,000	0,171	0,179	249	0,274
17,224	533,090	534,0	535,7	0,0	103,5	102,8	0,000	0,171	0,179	250	0,271

17,230	533,065	534,0	535,7	0,0	103,7	102,8	0,000	0,171	0,179	251	0,271
17,170	533,055	534,0	535,7	0,0	103,8	103,2	0,000	0,170	0,179	252	0,270
17,583	533,063	534,0	535,7	0,0	101,3	100,7	0,000	0,170	0,179	253	0,276
17,343	533,060	534,0	535,7	0,0	102,6	101,9	0,000	0,170	0,179	254	0,272
17,464	533,042	534,0	535,7	0,0	102,1	101,3	0,000	0,171	0,179	255	0,274
17,576	533,050	534,0	535,7	0,0	101,4	100,8	0,000	0,171	0,179	256	0,276
17,290	533,040	534,0	535,6	0,0	103,0	102,1	0,000	0,170	0,179	257	0,272
17,329	533,015	534,0	535,6	0,0	102,5	101,8	0,000	0,170	0,179	258	0,272
17,459	533,019	534,0	535,6	0,0	102,2	101,2	0,000	0,170	0,179	259	0,274
17,581	533,007	534,0	535,6	0,0	101,3	100,4	0,000	0,171	0,179	260	0,276
17,578	533,016	534,0	535,6	0,0	101,5	100,6	0,000	0,171	0,179	261	0,276
17,173	533,008	533,9	535,6	0,0	103,8	103,0	0,000	0,171	0,179	262	0,270
17,126	533,014	533,9	535,6	0,0	104,2	103,4	0,000	0,171	0,179	263	0,269
17,219	533,002	533,9	535,6	0,0	103,6	102,8	0,000	0,171	0,179	264	0,271
17,581	532,988	533,9	535,6	0,0	101,5	100,6	0,000	0,171	0,179	265	0,276
17,467	533,016	533,9	535,6	0,0	101,8	101,2	0,000	0,170	0,179	266	0,274
17,301	532,979	533,9	535,6	0,0	103,0	102,1	0,000	0,170	0,179	267	0,272
17,520	532,967	533,9	535,6	0,0	101,8	101,0	0,000	0,171	0,179	268	0,275
17,578	532,973	533,9	535,6	0,0	101,4	100,5	0,000	0,171	0,179	269	0,276
17,268	532,963	533,8	535,6	0,0	103,3	102,8	0,000	0,171	0,179	270	0,271
17,577	532,955	533,8	535,6	0,0	101,3	100,6	0,000	0,171	0,179	271	0,276
17,222	532,962	533,8	535,5	0,0	103,5	102,5	0,000	0,171	0,179	272	0,271
17,081	532,949	533,9	535,6	0,0	104,0	103,2	0,000	0,170	0,179	273	0,269
17,318	532,944	533,9	535,5	0,0	102,5	101,8	0,000	0,170	0,179	274	0,272
17,139	532,933	534,0	535,5	0,0	103,8	102,7	0,000	0,170	0,178	275	0,270
17,454	532,936	534,0	535,5	0,0	102,1	101,3	0,000	0,171	0,179	276	0,274
17,335	532,920	533,9	535,5	0,0	102,8	101,9	0,000	0,171	0,179	277	0,272
17,455	532,913	533,9	535,5	0,0	102,2	101,2	0,000	0,171	0,179	278	0,274
17,340	532,921	533,9	535,5	0,0	102,8	101,7	0,000	0,171	0,179	279	0,272
17,454	532,897	533,9	535,5	0,0	102,1	101,2	0,000	0,171	0,179	280	0,274
17,276	532,888	533,8	535,5	0,0	103,0	102,4	0,000	0,171	0,179	281	0,272
17,575	532,909	533,8	535,5	0,0	101,2	100,5	0,000	0,170	0,179	282	0,276
17,514	532,888	533,8	535,5	0,0	101,7	100,9	0,000	0,170	0,179	283	0,275
17,232	532,898	533,8	535,5	0,0	103,4	102,2	0,000	0,171	0,179	284	0,271
17,337	532,872	533,8	535,5	0,0	102,4	101,8	0,000	0,170	0,178	285	0,272
17,390	532,873	533,8	535,5	0,0	102,4	101,2	0,000	0,170	0,178	286	0,273
17,144	532,862	533,8	535,5	0,0	103,6	103,0	0,000	0,170	0,179	287	0,270
17,510	532,857	533,9	535,5	0,0	101,5	100,6	0,000	0,170	0,179	288	0,275
17,270	532,849	533,9	535,5	0,0	103,0	102,3	0,000	0,170	0,179	289	0,272
17,254	532,855	533,9	535,5	0,0	102,8	102,3	0,000	0,170	0,179	290	0,272
17,370	532,831	533,9	535,5	0,0	102,2	101,5	0,000	0,170	0,179	291	0,273
17,314	532,836	533,9	535,5	0,0	102,6	101,8	0,000	0,170	0,179	292	0,272
17,267	532,817	533,9	535,5	0,0	103,1	102,4	0,000	0,171	0,179	293	0,272
17,173	532,822	533,8	535,4	0,0	103,5	102,9	0,000	0,171	0,179	294	0,270
17,501	532,828	533,8	535,4	0,0	101,7	100,7	0,000	0,171	0,179	295	0,275
17,325	532,816	533,7	535,5	0,0	102,6	101,9	0,000	0,171	0,179	296	0,272
17,564	532,822	533,7	535,5	0,0	101,3	100,6	0,000	0,170	0,179	297	0,276
17,413	532,800	533,7	535,5	0,0	102,2	101,4	0,000	0,171	0,179	298	0,274
17,455	532,806	533,7	535,5	0,0	101,9	100,8	0,000	0,171	0,179	299	0,275
17,445	532,810	533,7	535,5	0,0	101,8	101,2	0,000	0,170	0,179	300	0,274
17,509	532,798	533,7	535,5	0,0	101,6	100,8	0,000	0,170	0,179	301	0,275
17,494	532,779	533,7	535,5	0,0	101,7	100,8	0,000	0,171	0,179	302	0,275
17,486	532,779	533,7	535,5	0,0	101,8	100,8	0,000	0,171	0,179	303	0,275
17,326	532,778	533,7	535,5	0,0	102,7	101,8	0,000	0,171	0,179	304	0,272
17,320	532,776	533,7	535,4	0,0	102,6	101,8	0,000	0,171	0,179	305	0,272
17,381	532,755	533,7	535,4	0,0	102,2	101,3	0,000	0,171	0,179	306	0,274
17,547	532,760	533,8	535,4	0,0	101,1	100,3	0,000	0,171	0,179	307	0,276
17,315	532,753	533,8	535,4	0,0	102,7	101,9	0,000	0,170	0,179	308	0,272
17,497	532,747	533,8	535,4	0,0	101,4	100,7	0,000	0,170	0,179	309	0,275
17,518	532,723	533,7	535,4	0,0	101,5	100,7	0,000	0,170	0,179	310	0,276
17,499	532,723	533,7	535,4	0,0	101,7	100,9	0,000	0,171	0,179	311	0,275
17,206	532,732	533,7	535,4	0,0	103,2	102,6	0,000	0,170	0,179	312	0,271
17,200	532,719	533,7	535,4	0,0	103,3	102,4	0,000	0,170	0,179	313	0,271
17,442	532,710	533,7	535,4	0,0	101,9	101,2	0,000	0,170	0,179	314	0,274
17,439	532,718	533,7	535,4	0,0	102,0	101,3	0,000	0,171	0,179	315	0,274
17,538	532,686	533,7	535,4	0,0	101,3	100,6	0,000	0,170	0,179	316	0,276
17,491	532,693	533,7	535,4	0,0	101,7	101,0	0,000	0,171	0,179	317	0,275
17,373	532,681	533,7	535,4	0,0	102,1	101,2	0,000	0,170	0,179	318	0,273
17,496	532,676	533,7	535,4	0,0	101,6	101,0	0,000	0,170	0,179	319	0,275
17,507	532,667	533,7	535,4	0,0	101,3	100,6	0,000	0,170	0,179	320	0,275
17,201	532,662	533,7	535,4	0,0	103,4	102,4	0,000	0,170	0,179	321	0,271
17,429	532,664	533,7	535,4	0,0	101,7	101,2	0,000	0,170	0,179	322	0,274
17,422	532,658	533,7	535,3	0,0	102,0	101,3	0,000	0,170	0,179	323	0,274
17,484	532,643	533,7	535,3	0,0	101,6	100,7	0,000	0,171	0,179	324	0,275
17,320	532,636	533,7	535,3	0,0	102,7	101,7	0,000	0,171	0,179	325	0,273
17,315	532,646	533,7	535,3	0,0	102,5	101,8	0,000	0,171	0,179	326	0,272
17,433	532,635	533,6	535,3	0,0	101,8	101,2	0,000	0,170	0,179	327	0,274
17,314	532,647	533,6	535,3	0,0	102,6	101,8	0,000	0,170	0,179	328	0,272
17,552	532,636	533,6	535,3	0,0	101,2	100,4	0,000	0,170	0,179	329	0,276
17,309	532,615	533,7	535,3	0,0	102,8	101,8	0,000	0,171	0,179	330	0,272
17,371	532,600	533,7	535,3	0,0	102,3	101,2	0,000	0,171	0,179	331	0,273
17,310	532,601	533,7	535,3	0,0	102,6	101,8	0,000	0,171	0,179	332	0,272
17,132	532,580	533,7	535,3	0,0	103,7	103,0	0,000	0,171	0,179	333	0,270
17,364	532,590	533,7	535,3	0,0	102,3	101,4	0,000	0,171	0,179	334	0,273
17,310	532,569	533,7	535,3	0,0	102,8	101,8	0,000	0,171	0,179	335	0,272
17,072	532,583	533,6	535,3	0,0	104,0	103,2	0,000	0,171	0,179	336	0,269

17,360	532,573	533,6	535,3	0,0	102,2	101,4	0,000	0,170	0,179	337	0,273
17,272	532,559	533,7	535,3	0,0	102,7	102,0	0,000	0,171	0,179	338	0,272
17,480	532,557	533,7	535,2	0,0	101,1	100,7	0,000	0,170	0,179	339	0,275
17,426	532,540	533,7	535,2	0,0	101,9	101,1	0,000	0,170	0,179	340	0,274
17,128	532,538	533,7	535,2	0,0	103,7	102,9	0,000	0,171	0,179	341	0,270
17,446	532,531	533,7	535,2	0,0	101,8	101,0	0,000	0,171	0,179	342	0,275
17,148	532,532	533,7	535,2	0,0	103,6	102,7	0,000	0,171	0,179	343	0,270
17,430	532,520	533,6	535,2	0,0	102,0	101,0	0,000	0,171	0,179	344	0,274
17,426	532,517	533,6	535,3	0,0	101,9	101,1	0,000	0,171	0,179	345	0,274
17,523	532,523	533,7	535,3	0,0	101,1	100,5	0,000	0,170	0,179	346	0,276
17,367	532,518	533,6	535,2	0,0	102,2	101,4	0,000	0,170	0,179	347	0,273
17,310	532,514	533,6	535,2	0,0	102,6	101,8	0,000	0,171	0,179	348	0,272
17,420	532,486	533,6	535,2	0,0	101,9	101,2	0,000	0,171	0,179	349	0,274
17,427	532,497	533,6	535,2	0,0	101,7	101,3	0,000	0,170	0,179	350	0,274
17,127	532,485	533,7	535,2	0,0	103,6	102,7	0,000	0,170	0,179	351	0,270
17,304	532,481	533,6	535,2	0,0	102,7	101,7	0,000	0,171	0,179	352	0,272
17,312	532,482	533,6	535,2	0,0	102,5	101,9	0,000	0,171	0,179	353	0,273
17,419	532,461	533,6	535,2	0,0	102,0	100,9	0,000	0,171	0,179	354	0,274
17,117	532,466	533,6	535,2	0,0	103,7	102,8	0,000	0,171	0,179	355	0,270
17,059	532,445	533,7	535,2	0,0	104,1	103,2	0,000	0,171	0,179	356	0,269
17,431	532,456	533,6	535,2	0,0	101,9	101,0	0,000	0,171	0,179	357	0,274
17,362	532,448	533,6	535,2	0,0	102,2	101,4	0,000	0,171	0,179	358	0,273
17,485	532,440	533,5	535,2	0,0	101,5	100,9	0,000	0,170	0,179	359	0,275
17,240	532,423	533,5	535,2	0,0	102,9	102,1	0,000	0,170	0,179	360	0,272
17,431	532,430	533,6	535,2	0,0	101,9	101,1	0,000	0,171	0,179	361	0,275
17,481	532,412	533,6	535,2	0,0	101,4	100,8	0,000	0,171	0,179	362	0,275
17,243	532,414	533,6	535,2	0,0	102,9	102,2	0,000	0,170	0,179	363	0,272
17,660	532,415	533,6	535,2	0,0	100,5	99,8	0,000	0,170	0,179	364	0,278
17,423	532,417	533,6	535,2	0,0	101,8	101,0	0,000	0,170	0,179	365	0,274
17,173	532,392	533,6	535,2	0,0	103,3	102,5	0,000	0,170	0,179	366	0,271
17,422	532,394	533,6	535,2	0,0	101,9	101,1	0,000	0,171	0,179	367	0,274
17,600	532,390	533,6	535,2	0,0	100,8	100,2	0,000	0,171	0,179	368	0,277
17,064	532,385	533,6	535,2	0,0	103,9	103,2	0,000	0,170	0,179	369	0,269
17,472	532,375	533,6	535,2	0,0	101,5	100,5	0,000	0,170	0,179	370	0,275
17,395	532,376	533,6	535,2	0,0	101,9	101,3	0,000	0,171	0,179	371	0,274
17,533	532,380	533,6	535,2	0,0	101,1	100,5	0,000	0,170	0,179	372	0,276
17,359	532,346	533,6	535,1	0,0	102,3	101,5	0,000	0,171	0,179	373	0,273
17,297	532,345	533,6	535,1	0,0	102,4	101,7	0,000	0,171	0,179	374	0,272
17,418	532,344	533,6	535,1	0,0	101,7	101,0	0,000	0,170	0,179	375	0,274
17,476	532,334	533,6	535,1	0,0	101,3	100,8	0,000	0,170	0,179	376	0,275
17,535	532,334	533,6	535,1	0,0	101,2	100,3	0,000	0,170	0,179	377	0,276
17,303	532,312	533,5	535,1	0,0	102,5	101,6	0,000	0,171	0,179	378	0,272
17,428	532,325	533,5	535,1	0,0	101,9	101,3	0,000	0,171	0,179	379	0,274
17,520	532,301	533,5	535,1	0,0	101,3	100,4	0,000	0,171	0,179	380	0,276
17,241	532,311	533,5	535,1	0,0	103,0	102,2	0,000	0,171	0,179	381	0,272
17,303	532,295	533,5	535,1	0,0	102,5	101,9	0,000	0,171	0,179	382	0,272
17,415	532,302	533,5	535,1	0,0	101,8	100,7	0,000	0,170	0,179	383	0,274
17,357	460,000	533,5	535,1	0,0	102,3	101,3	0,000	0,171	0,179	384	0,273

Average	Average	Average	Average								Average
17,96	Inlet +	Inlet +	Inlet +								0,278
	Outlet	Outlet	Outlet	Average	Average	Average	# 1st Hr	#1	#2		
Tunnel	Temp.	Temp.	Temp.	98,69	101,91	100,79	System 1st Hr	System 1	System 2		SQRT
Velocity	Meter 1st Hr	Meter 1	Meter 2	Proportional Rates			Vol.Std.	Vol.Std.	Vol.Std.		Delta-P
				PR1at hour	PR1	PR2				Time	
Ft/Sec	Deg. R	Deg. R	Deg. R	%	%	%	(ft3)	(ft3)	(ft3)	min	(In H2O)2
18,294	537,017	533,5	534,1				0,182	0,169	0,178	0	0,277
18,031	537,172	533,5	534,2	98,2	102,0	101,2	0,182	0,169	0,178	1	0,278
17,976	537,234	533,5	534,3	98,3	102,3	101,3	0,182	0,169	0,177	2	0,277
17,973	537,299	533,5	534,4	98,5	102,3	101,4	0,182	0,169	0,177	3	0,277
18,293	537,372	533,5	534,4	97,0	100,8	100,0	0,182	0,169	0,178	4	0,282
17,955	537,438	533,5	534,5	99,0	103,0	101,8	0,182	0,169	0,177	5	0,276
18,146	537,478	533,5	534,5	98,0	102,0	101,0	0,182	0,169	0,177	6	0,279
18,219	537,500	533,5	534,6	97,8	101,8	100,9	0,182	0,169	0,178	7	0,280
18,296	537,581	533,6	534,7	97,6	101,6	100,6	0,182	0,169	0,178	8	0,281
18,237	537,637	533,6	534,8	97,9	101,8	101,0	0,182	0,169	0,178	9	0,280
18,007	537,680	533,7	534,9	99,3	103,2	102,3	0,182	0,169	0,178	10	0,276
18,029	537,675	533,7	535,0	99,3	103,5	102,7	0,182	0,169	0,178	11	0,276
18,035	537,700	533,8	535,1	99,3	103,5	102,7	0,182	0,169	0,178	12	0,276
18,210	537,768	533,8	535,2	98,4	102,3	101,4	0,182	0,169	0,178	13	0,279
18,104	537,848	533,9	535,3	99,1	103,1	102,1	0,182	0,169	0,177	14	0,277
18,340	537,918	534,0	535,4	97,8	101,8	100,8	0,182	0,169	0,177	15	0,281
17,930	537,970	534,0	535,5	100,1	104,3	103,3	0,182	0,169	0,177	16	0,274
18,110	538,067	534,0	535,6	99,0	103,1	102,5	0,182	0,169	0,178	17	0,277
18,171	538,121	534,1	535,6	98,8	102,9	101,8	0,182	0,169	0,178	18	0,278
17,986	538,217	534,1	535,7	99,7	103,8	102,8	0,182	0,169	0,177	19	0,275
18,101	538,282	534,2	535,8	99,0	103,1	102,3	0,182	0,169	0,177	20	0,277
18,113	538,358	534,3	535,9	99,0	103,2	102,3	0,182	0,169	0,178	21	0,277
18,048	538,438	534,3	536,0	99,4	103,6	102,6	0,182	0,169	0,178	22	0,276
18,034	538,521	534,4	536,1	99,3	103,4	102,4	0,182	0,169	0,177	23	0,276
18,055	538,587	534,4	536,2	99,3	103,5	102,6	0,182	0,169	0,177	24	0,276
18,048	538,683	534,5	536,2	99,3	103,5	102,4	0,182	0,169	0,177	25	0,276
17,978	538,734	534,5	536,3	99,6	104,0	102,7	0,182	0,169	0,177	26	0,275
18,048	538,825	534,4	536,3	99,2	103,6	102,3	0,182	0,169	0,177	27	0,276
18,045	538,899	534,4	536,4	99,3	103,6	102,6	0,182	0,169	0,177	28	0,276
18,170	538,965	534,4	536,4	98,6	103,1	101,8	0,182	0,169	0,177	29	0,278
18,100	539,037	534,5	536,5	98,7	103,0	102,0	0,181	0,169	0,177	30	0,277
18,021	539,054	534,6	536,6	99,0	103,4	102,2	0,181	0,169	0,177	31	0,276
18,008	539,072	534,6	536,6	99,0	103,3	102,2	0,182	0,169	0,177	32	0,276
18,053	539,076	534,6	536,7	98,6	102,7	101,7	0,182	0,169	0,177	33	0,277
18,244	539,122	534,6	536,7	97,5	101,8	100,5	0,182	0,169	0,177	34	0,280
17,988	539,176	534,6	536,8	99,1	103,1	102,0	0,182	0,169	0,177	35	0,276
17,986	539,210	534,7	536,8	98,8	103,2	101,7	0,181	0,169	0,177	36	0,276
17,919	539,267	534,7	536,9	99,1	103,5	102,3	0,181	0,169	0,177	37	0,275
18,221	539,307	534,7	536,9	97,5	101,7	100,6	0,181	0,169	0,177	38	0,280
17,977	539,321	534,8	537,0	98,8	103,1	102,0	0,182	0,169	0,177	39	0,276
17,973	539,323	534,8	537,0	98,9	103,2	101,9	0,182	0,169	0,177	40	0,276
18,063	539,334	534,8	537,1	98,2	102,5	101,4	0,181	0,169	0,177	41	0,278
17,663	539,408	534,8	537,1	100,5	104,8	103,2	0,182	0,169	0,177	42	0,272
17,963	539,467	534,8	537,2	98,7	102,9	101,5	0,181	0,169	0,176	43	0,276
17,840	539,529	534,9	537,2	99,4	103,8	102,4	0,181	0,169	0,177	44	0,274
17,942	539,570	534,9	537,3	98,8	102,9	102,0	0,181	0,169	0,177	45	0,276
17,952	539,603	534,9	537,3	98,8	103,0	101,8	0,181	0,169	0,177	46	0,276
17,886	539,686	534,9	537,3	98,9	103,0	102,0	0,181	0,169	0,177	47	0,275
17,880	539,708	534,9	537,4	98,7	103,3	102,1	0,181	0,169	0,177	48	0,275
17,933	539,804	535,0	537,4	98,4	102,8	101,5	0,181	0,169	0,177	49	0,276
18,051	539,860	535,1	537,5	97,8	102,1	101,0	0,181	0,169	0,177	50	0,278
17,986	539,912	535,1	537,5	98,1	102,4	101,5	0,181	0,169	0,177	51	0,277
17,764	539,950	535,1	537,6	99,2	103,5	102,6	0,181	0,169	0,177	52	0,274
17,916	539,976	535,1	537,7	98,3	102,7	101,4	0,181	0,169	0,177	53	0,276
17,968	539,987	535,1	537,7	97,9	102,3	101,4	0,181	0,169	0,177	54	0,277
18,028	540,028	535,2	537,7	97,6	102,0	100,9	0,181	0,169	0,177	55	0,278
17,847	540,075	535,3	537,8	98,5	103,0	101,9	0,181	0,169	0,177	56	0,275
17,900	540,125	535,3	537,8	98,2	102,4	101,2	0,181	0,169	0,177	57	0,276
17,772	540,130	535,4	537,9	98,8	103,2	102,0	0,181	0,169	0,177	58	0,274
17,917	540,124	535,4	537,9	97,9	102,2	101,3	0,181	0,169	0,177	59	0,277
17,875	539,523	535,4	538,0	0,0	102,2	101,3	0,000	0,169	0,177	60	0,276
17,944	539,177	535,4	538,0	0,0	102,0	101,3	0,000	0,169	0,177	61	0,277
17,910	538,997	535,5	538,1	0,0	102,3	101,0	0,000	0,169	0,177	62	0,277
17,838	538,884	535,5	538,0	0,0	102,7	101,6	0,000	0,169	0,177	63	0,276
17,930	538,817	535,5	538,0	0,0	102,0	100,9	0,000	0,169	0,177	64	0,277
18,108	538,752	535,5	538,0	0,0	101,1	99,8	0,000	0,169	0,177	65	0,280
17,949	538,718	535,6	538,0	0,0	102,1	100,8	0,000	0,169	0,177	66	0,277
17,931	538,697	535,7	538,1	0,0	102,0	100,8	0,000	0,169	0,177	67	0,277
17,922	538,685	535,7	538,0	0,0	102,0	100,7	0,000	0,169	0,177	68	0,277
17,856	538,661	535,7	538,0	0,0	102,3	101,1	0,000	0,169	0,177	69	0,276
17,776	538,643	535,8	538,0	0,0	102,9	101,8	0,000	0,169	0,177	70	0,275
17,918	538,669	535,8	538,1	0,0	102,1	100,8	0,000	0,169	0,177	71	0,277
17,855	538,670	535,8	538,1	0,0	102,4	101,2	0,000	0,169	0,177	72	0,276
17,847	538,666	535,8	538,1	0,0	102,4	101,1	0,000	0,169	0,177	73	0,276
18,028	538,649	535,8	538,1	0,0	101,3	100,1	0,000	0,169	0,177	74	0,279
17,967	538,627	535,9	538,1	0,0	101,6	100,4	0,000	0,169	0,177	75	0,278
17,855	538,638	535,8	538,1	0,0	102,4	101,0	0,000	0,169	0,177	76	0,276
17,882	538,667	535,9	538,2	0,0	101,9	100,8	0,000	0,169	0,177	77	0,277
17,904	538,683	535,9	538,2	0,0	101,9	100,9	0,000	0,169	0,177	78	0,277

17,906	538,700	536,0	538,2	0,0	102,0	100,7	0,000	0,169	0,177	79	0,277
17,841	538,716	536,0	538,2	0,0	102,4	101,2	0,000	0,169	0,177	80	0,276
17,896	538,733	536,0	538,2	0,0	101,9	100,6	0,000	0,169	0,177	81	0,277
17,880	538,711	536,0	538,3	0,0	101,7	100,6	0,000	0,169	0,177	82	0,277
17,829	538,730	536,0	538,3	0,0	102,0	100,9	0,000	0,169	0,177	83	0,276
17,812	538,732	536,1	538,3	0,0	102,4	101,1	0,000	0,169	0,177	84	0,276
18,002	538,750	536,1	538,3	0,0	101,0	100,2	0,000	0,169	0,177	85	0,279
18,059	538,762	536,1	538,3	0,0	100,9	99,7	0,000	0,169	0,177	86	0,280
17,819	538,769	536,1	538,3	0,0	102,0	100,7	0,000	0,169	0,177	87	0,276
17,934	538,785	536,1	538,4	0,0	101,4	100,1	0,000	0,169	0,177	88	0,278
17,814	538,787	536,2	538,4	0,0	102,0	100,8	0,000	0,169	0,177	89	0,276
17,829	538,776	536,1	538,4	0,0	102,0	100,7	0,000	0,169	0,177	90	0,276
17,871	538,783	536,2	538,4	0,0	101,7	100,7	0,000	0,169	0,177	91	0,277
18,107	538,793	536,2	538,4	0,0	100,6	99,0	0,000	0,169	0,177	92	0,281
18,048	538,807	536,2	538,4	0,0	100,6	99,6	0,000	0,169	0,177	93	0,280
17,984	538,781	536,2	538,4	0,0	101,1	99,8	0,000	0,169	0,177	94	0,279
17,927	538,811	536,2	538,3	0,0	101,5	100,0	0,000	0,169	0,177	95	0,278
17,986	538,812	536,1	538,2	0,0	101,0	99,6	0,000	0,169	0,177	96	0,279
17,803	538,812	536,1	538,2	0,0	102,0	101,0	0,000	0,169	0,177	97	0,276
17,806	538,835	536,1	538,2	0,0	101,9	100,9	0,000	0,169	0,177	98	0,276
18,041	538,840	536,1	538,2	0,0	100,7	99,4	0,000	0,169	0,177	99	0,280
17,859	538,830	536,1	538,3	0,0	101,7	100,5	0,000	0,169	0,177	100	0,277
17,980	538,815	536,1	538,3	0,0	101,0	100,0	0,000	0,169	0,177	101	0,279
18,151	538,827	536,2	538,3	0,0	99,8	99,0	0,000	0,169	0,177	102	0,282
18,033	538,827	536,2	538,3	0,0	100,6	99,5	0,000	0,169	0,177	103	0,280
17,972	538,820	536,2	538,3	0,0	101,0	99,8	0,000	0,169	0,177	104	0,279
17,854	538,823	536,2	538,3	0,0	101,5	100,6	0,000	0,169	0,177	105	0,277
18,204	538,806	536,2	538,3	0,0	99,5	98,7	0,000	0,169	0,177	106	0,283
17,734	538,791	536,2	538,3	0,0	102,3	101,2	0,000	0,169	0,177	107	0,275
18,125	538,781	536,2	538,4	0,0	100,2	98,7	0,000	0,169	0,177	108	0,281
17,968	538,791	536,2	538,4	0,0	101,1	99,8	0,000	0,169	0,177	109	0,279
17,788	538,778	536,2	538,4	0,0	101,8	100,9	0,000	0,169	0,177	110	0,276
17,789	538,760	536,3	538,4	0,0	101,9	100,7	0,000	0,169	0,177	111	0,276
17,905	538,748	536,3	538,4	0,0	101,3	100,2	0,000	0,169	0,177	112	0,278
17,905	538,744	536,3	538,4	0,0	101,2	100,2	0,000	0,169	0,177	113	0,278
18,022	538,715	536,3	538,4	0,0	100,6	99,4	0,000	0,169	0,177	114	0,280
18,075	538,704	536,3	538,4	0,0	100,3	99,4	0,000	0,169	0,177	115	0,281
17,902	538,693	536,3	538,4	0,0	101,3	100,0	0,000	0,169	0,177	116	0,278
18,080	538,656	536,3	538,4	0,0	100,1	99,2	0,000	0,169	0,177	117	0,281
17,783	538,656	536,4	538,4	0,0	101,9	100,7	0,000	0,169	0,177	118	0,276
17,843	538,633	536,4	538,4	0,0	101,5	100,5	0,000	0,169	0,177	119	0,277
17,905	538,633	536,4	538,4	0,0	101,0	99,9	0,000	0,169	0,177	120	0,278
18,126	538,622	536,4	538,4	0,0	99,9	98,7	0,000	0,169	0,177	121	0,282
17,898	538,607	536,3	538,3	0,0	101,3	99,9	0,000	0,169	0,177	122	0,278
17,780	538,606	536,2	538,3	0,0	101,7	100,5	0,000	0,169	0,177	123	0,276
17,917	538,608	536,3	538,3	0,0	101,1	99,9	0,000	0,169	0,177	124	0,278
18,187	538,611	536,3	538,3	0,0	99,4	98,6	0,000	0,169	0,177	125	0,283
18,014	538,620	536,3	538,3	0,0	100,3	99,2	0,000	0,169	0,177	126	0,280
17,954	538,591	536,3	538,3	0,0	100,8	99,9	0,000	0,169	0,177	127	0,279
18,011	538,585	536,3	538,3	0,0	100,6	99,6	0,000	0,169	0,177	128	0,280
18,012	538,568	536,3	538,3	0,0	100,4	99,3	0,000	0,169	0,177	129	0,280
17,835	538,549	536,3	538,3	0,0	101,5	100,3	0,000	0,169	0,177	130	0,277
17,712	538,524	536,3	538,3	0,0	102,2	100,7	0,000	0,169	0,177	131	0,275
17,777	538,496	536,3	538,4	0,0	101,8	100,8	0,000	0,169	0,177	132	0,276
17,891	538,469	536,3	538,4	0,0	101,2	100,1	0,000	0,169	0,177	133	0,278
18,009	538,446	536,4	538,4	0,0	100,5	99,4	0,000	0,169	0,177	134	0,280
17,889	538,433	536,4	538,4	0,0	101,2	99,8	0,000	0,169	0,177	135	0,278
18,007	538,417	536,3	538,4	0,0	100,5	99,2	0,000	0,169	0,177	136	0,280
17,767	538,389	536,4	538,4	0,0	101,9	100,6	0,000	0,169	0,177	137	0,276
17,867	538,367	536,4	538,4	0,0	101,0	100,1	0,000	0,169	0,177	138	0,278
18,062	538,335	536,4	538,4	0,0	100,1	98,9	0,000	0,169	0,177	139	0,281
17,766	538,338	536,4	538,4	0,0	101,8	100,5	0,000	0,169	0,177	140	0,276
18,002	538,340	536,4	538,4	0,0	100,4	99,4	0,000	0,169	0,177	141	0,280
17,766	538,324	536,5	538,4	0,0	101,9	100,6	0,000	0,169	0,177	142	0,276
17,887	538,319	536,4	538,4	0,0	101,2	100,0	0,000	0,169	0,177	143	0,278
17,946	538,311	536,4	538,4	0,0	100,7	99,8	0,000	0,169	0,177	144	0,279
17,986	538,290	536,5	538,4	0,0	100,5	99,3	0,000	0,169	0,177	145	0,280
18,009	538,295	536,5	538,4	0,0	100,4	99,3	0,000	0,169	0,177	146	0,280
17,828	538,302	536,5	538,4	0,0	101,4	100,3	0,000	0,169	0,177	147	0,277
18,009	538,308	536,5	538,3	0,0	100,6	99,5	0,000	0,169	0,177	148	0,280
18,126	538,299	536,5	538,3	0,0	99,7	98,5	0,000	0,169	0,177	149	0,282
18,066	538,269	536,5	538,3	0,0	100,0	99,0	0,000	0,169	0,177	150	0,281
17,805	538,244	536,4	538,3	0,0	101,5	100,6	0,000	0,169	0,177	151	0,277
17,828	538,228	536,5	538,3	0,0	101,4	100,5	0,000	0,169	0,177	152	0,277
17,768	538,224	536,4	538,3	0,0	101,7	100,9	0,000	0,169	0,177	153	0,276
18,007	538,217	536,4	538,4	0,0	100,5	99,2	0,000	0,169	0,177	154	0,280
18,051	538,202	536,4	538,4	0,0	100,1	99,1	0,000	0,169	0,177	155	0,281
17,709	538,176	536,4	538,4	0,0	102,2	100,9	0,000	0,169	0,177	156	0,275
17,769	538,137	536,4	538,4	0,0	101,6	100,8	0,000	0,169	0,177	157	0,276
17,766	460,000	536,4	538,4	0,0	101,7	100,6	0,000	0,169	0,177	158	0,276

Average	Average	Average	Average								Average
17,76	Inlet +	Inlet +	Inlet +								0,281
	Outlet	Outlet	Outlet	Average	Average	Average	# 1st Hr	#1	#2		
Tunnel	Temp.	Temp.	Temp.	96,33	101,59	102,39	System 1st Hr	System 1	System 2		SQRT
Velocity	Meter 1st Hr	Meter 1	Meter 2	Proportional Rates			Vol.Std.	Vol.Std.	Vol.Std.		Delta-P
				PR1at hour	PR1	PR2				Time	
Ft/Sec	Deg. R	Deg. R	Deg. R	%	%	%	(ft3)	(ft3)	(ft3)	min	(In H2O)2
17,788	534,971	532,7	533,2				0,183	0,169	0,180	0	0,277
17,601	535,034	532,6	533,2	97,9	103,3	104,4	0,183	0,169	0,180	1	0,277
17,636	535,085	532,6	533,2	96,6	102,1	103,0	0,183	0,169	0,179	2	0,281
17,622	535,137	532,6	533,3	96,0	103,6	104,7	0,183	0,169	0,180	3	0,277
17,582	535,156	532,6	533,3	96,6	104,0	105,0	0,183	0,169	0,180	4	0,276
17,660	535,167	532,6	533,4	97,5	103,2	104,1	0,183	0,169	0,179	5	0,278
17,646	535,157	532,6	533,4	97,2	102,8	103,7	0,183	0,169	0,180	6	0,279
17,734	535,141	532,6	533,5	96,7	102,3	103,3	0,183	0,169	0,180	7	0,280
17,859	535,093	532,6	533,5	96,1	101,7	102,6	0,183	0,169	0,180	8	0,282
17,813	535,087	532,6	533,6	96,2	101,9	103,0	0,183	0,169	0,180	9	0,281
17,847	535,072	532,6	533,6	96,0	101,7	102,4	0,183	0,169	0,180	10	0,282
17,946	535,052	532,6	533,6	95,3	101,0	101,9	0,183	0,169	0,180	11	0,284
17,910	535,013	532,6	533,7	95,7	101,1	102,2	0,183	0,169	0,180	12	0,283
17,789	534,989	532,6	533,7	96,4	102,1	103,2	0,183	0,169	0,180	13	0,281
17,712	534,993	532,6	533,7	96,6	102,3	103,2	0,183	0,169	0,180	14	0,280
17,820	534,926	532,6	533,8	95,9	101,5	102,4	0,183	0,169	0,180	15	0,282
17,834	534,914	532,5	533,8	96,0	101,5	102,8	0,183	0,169	0,180	16	0,282
17,754	534,875	532,5	533,8	96,3	101,8	102,8	0,183	0,169	0,180	17	0,281
17,793	534,850	532,6	533,8	96,2	101,7	102,7	0,183	0,169	0,180	18	0,281
17,829	534,815	532,6	533,8	96,0	101,6	102,4	0,183	0,169	0,180	19	0,282
17,772	534,821	532,6	533,9	96,4	101,9	102,9	0,183	0,169	0,180	20	0,281
17,781	534,816	532,6	533,9	96,2	101,7	102,7	0,183	0,169	0,180	21	0,281
17,865	534,824	532,5	533,9	95,7	101,1	102,2	0,183	0,169	0,180	22	0,283
17,809	534,821	532,5	533,9	95,8	101,6	102,5	0,183	0,169	0,180	23	0,282
17,878	534,797	532,5	534,0	95,7	101,1	102,1	0,183	0,169	0,180	24	0,283
17,753	534,788	532,5	534,0	96,3	101,9	102,8	0,183	0,169	0,180	25	0,281
17,873	534,764	532,5	534,0	95,6	101,2	102,1	0,183	0,169	0,180	26	0,283
17,935	534,734	532,6	534,1	95,3	100,9	101,7	0,183	0,169	0,180	27	0,284
17,781	534,698	532,6	534,1	96,6	102,3	103,0	0,183	0,169	0,180	28	0,280
17,876	534,711	532,6	534,1	95,7	101,3	102,1	0,183	0,169	0,180	29	0,283
17,715	534,704	532,6	534,1	96,6	102,2	103,0	0,183	0,169	0,180	30	0,280
17,758	534,677	532,6	534,2	96,4	102,1	102,7	0,183	0,169	0,180	31	0,281
17,752	534,629	532,7	534,2	96,3	102,0	102,6	0,183	0,170	0,180	32	0,281
17,689	534,596	532,6	534,2	96,6	102,2	103,1	0,183	0,170	0,180	33	0,280
17,750	534,570	532,6	534,2	96,2	101,8	102,8	0,183	0,169	0,180	34	0,281
17,742	534,549	532,6	534,1	96,1	101,7	102,9	0,183	0,169	0,180	35	0,281
17,863	534,522	532,6	534,2	95,6	101,1	101,9	0,183	0,169	0,180	36	0,283
17,798	534,388	532,6	534,2	95,9	101,4	102,5	0,183	0,169	0,180	37	0,282
17,681	534,360	532,5	534,1	96,6	102,2	103,0	0,183	0,169	0,180	38	0,280
17,908	534,306	532,5	534,1	95,3	100,7	101,5	0,183	0,169	0,180	39	0,284
17,796	534,302	532,5	534,0	96,0	101,5	102,3	0,183	0,169	0,180	40	0,282
17,744	534,284	532,4	534,0	96,2	101,8	102,7	0,183	0,169	0,180	41	0,281
17,849	534,288	532,4	534,0	95,7	101,4	102,2	0,183	0,170	0,180	42	0,282
17,808	534,255	532,4	534,0	96,1	101,5	102,3	0,183	0,169	0,180	43	0,282
17,866	534,260	532,4	534,0	95,6	101,1	102,1	0,183	0,169	0,180	44	0,283
17,894	534,258	532,4	534,0	95,6	101,0	101,9	0,183	0,169	0,180	45	0,283
17,748	534,180	532,4	534,0	96,3	101,8	102,6	0,183	0,169	0,180	46	0,281
17,873	534,119	532,4	534,0	95,8	101,3	102,1	0,183	0,169	0,180	47	0,283
17,702	534,095	532,4	534,0	96,7	102,2	103,2	0,183	0,169	0,180	48	0,280
17,600	534,090	532,4	534,0	97,4	102,8	103,7	0,183	0,169	0,180	49	0,278
17,814	534,097	532,4	534,0	96,0	101,5	102,5	0,183	0,169	0,180	50	0,282
17,756	534,097	532,4	534,0	96,4	101,9	102,5	0,183	0,169	0,180	51	0,281
17,928	534,048	532,4	534,0	95,4	100,9	101,6	0,183	0,169	0,179	52	0,284
17,465	534,038	532,4	534,0	96,0	103,5	104,5	0,183	0,169	0,180	53	0,276
17,537	534,051	532,4	534,0	97,7	103,3	104,0	0,183	0,169	0,180	54	0,277
17,704	534,045	532,4	534,1	96,7	102,2	103,0	0,183	0,169	0,180	55	0,280
17,701	534,033	532,4	534,1	96,8	102,1	103,1	0,183	0,169	0,180	56	0,280
17,934	534,020	532,4	534,1	95,5	101,0	102,0	0,183	0,169	0,180	57	0,284
17,743	534,021	532,4	534,1	96,6	101,8	102,8	0,183	0,169	0,180	58	0,281
17,702	534,003	532,4	534,1	96,8	102,2	103,2	0,183	0,169	0,180	59	0,280
17,766	533,979	532,4	534,1	0,0	101,7	103,0	0,000	0,169	0,180	60	0,281
17,741	533,744	532,4	534,1	0,0	101,7	102,8	0,000	0,169	0,180	61	0,281
17,764	533,606	532,4	534,1	0,0	101,9	102,9	0,000	0,169	0,180	62	0,281
17,709	533,545	532,4	534,1	0,0	102,1	103,2	0,000	0,169	0,180	63	0,280
17,878	533,477	532,5	534,1	0,0	101,3	102,0	0,000	0,169	0,180	64	0,283
17,812	533,427	532,5	534,1	0,0	101,6	102,6	0,000	0,169	0,180	65	0,282
17,765	533,405	532,5	534,1	0,0	101,9	102,8	0,000	0,169	0,180	66	0,281
17,821	533,384	532,6	534,2	0,0	101,4	102,4	0,000	0,169	0,180	67	0,282
17,623	533,355	532,6	534,2	0,0	102,7	103,9	0,000	0,169	0,180	68	0,279
18,007	533,329	532,6	534,2	0,0	100,6	101,4	0,000	0,169	0,180	69	0,284
17,834	533,300	532,7	534,3	0,0	101,6	102,6	0,000	0,169	0,180	70	0,282
17,943	533,284	532,7	534,3	0,0	100,9	101,9	0,000	0,169	0,180	71	0,284
17,947	533,259	532,7	534,3	0,0	100,9	101,8	0,000	0,169	0,180	72	0,284
17,755	533,247	532,7	534,4	0,0	101,9	102,7	0,000	0,169	0,179	73	0,281
17,824	533,251	532,8	534,4	0,0	101,4	102,5	0,000	0,169	0,179	74	0,282
17,718	533,269	532,8	534,5	0,0	102,2	103,1	0,000	0,169	0,180	75	0,280
17,833	533,257	532,9	534,5	0,0	101,5	102,5	0,000	0,169	0,180	76	0,282
17,543	533,264	532,9	534,6	0,0	103,3	104,2	0,000	0,169	0,180	77	0,277
17,780	533,259	532,9	534,6	0,0	102,0	102,5	0,000	0,169	0,179	78	0,281

17,847	533,257	532,9	534,7	0,0	101,5	102,5	0,000	0,169	0,179	79	0,282
17,698	533,256	533,0	534,7	0,0	101,4	102,3	0,000	0,169	0,180	80	0,283
17,618	533,267	533,0	534,7	0,0	103,0	104,0	0,000	0,169	0,180	81	0,278
17,496	533,284	533,1	534,8	0,0	103,5	104,6	0,000	0,169	0,180	82	0,276
17,496	533,286	533,1	534,8	0,0	103,6	104,3	0,000	0,169	0,179	83	0,276
17,563	533,275	533,1	534,9	0,0	103,5	104,2	0,000	0,169	0,179	84	0,277
17,498	533,279	533,1	534,9	0,0	103,8	104,5	0,000	0,169	0,179	85	0,276
17,773	533,268	533,1	534,9	0,0	102,3	102,7	0,000	0,169	0,179	86	0,280
17,908	533,250	533,1	534,9	0,0	101,4	102,2	0,000	0,169	0,179	87	0,283
17,853	533,239	533,1	534,9	0,0	101,6	102,6	0,000	0,169	0,180	88	0,282
17,669	533,230	533,1	535,0	0,0	102,8	103,5	0,000	0,169	0,179	89	0,279
17,857	533,222	533,1	535,0	0,0	101,7	102,6	0,000	0,169	0,179	90	0,282
17,743	533,207	533,2	535,0	0,0	102,3	103,1	0,000	0,169	0,180	91	0,280
17,775	533,210	533,2	535,0	0,0	102,2	103,2	0,000	0,169	0,179	92	0,280
17,919	533,223	533,2	535,1	0,0	101,3	102,3	0,000	0,169	0,180	93	0,283
17,683	533,222	533,3	535,1	0,0	102,6	103,4	0,000	0,169	0,179	94	0,279
17,510	533,221	533,2	535,1	0,0	103,8	104,6	0,000	0,169	0,179	95	0,276
17,559	533,241	533,3	535,1	0,0	103,5	104,4	0,000	0,169	0,179	96	0,277
17,759	533,233	533,3	535,2	0,0	102,5	103,1	0,000	0,169	0,179	97	0,280
17,752	533,226	533,3	535,2	0,0	102,3	103,2	0,000	0,169	0,179	98	0,280
17,747	533,263	533,2	535,2	0,0	102,3	103,1	0,000	0,169	0,179	99	0,280
17,924	533,255	533,2	535,2	0,0	101,6	102,1	0,000	0,169	0,179	100	0,283
17,758	533,266	533,3	535,3	0,0	102,4	103,1	0,000	0,169	0,179	101	0,280
17,574	533,257	533,3	535,3	0,0	103,4	104,3	0,000	0,169	0,179	102	0,277
17,752	533,266	533,4	535,3	0,0	102,3	103,1	0,000	0,169	0,179	103	0,280
17,637	533,301	533,4	535,3	0,0	103,2	103,8	0,000	0,169	0,179	104	0,278
17,770	533,294	533,4	535,3	0,0	102,2	102,9	0,000	0,169	0,179	105	0,280
17,982	533,316	533,4	535,4	0,0	101,0	101,7	0,000	0,169	0,179	106	0,284
17,693	533,322	533,4	535,4	0,0	102,7	103,7	0,000	0,169	0,179	107	0,279
17,552	533,323	533,4	535,4	0,0	103,7	104,5	0,000	0,169	0,180	108	0,277
17,865	533,341	533,5	535,4	0,0	101,8	102,4	0,000	0,169	0,179	109	0,282
17,629	533,317	533,5	535,4	0,0	103,0	103,8	0,000	0,169	0,179	110	0,278
17,782	533,325	533,5	535,4	0,0	102,1	103,0	0,000	0,169	0,179	111	0,280
17,570	533,349	533,5	535,5	0,0	103,2	103,9	0,000	0,169	0,179	112	0,277
17,748	533,330	533,5	535,5	0,0	102,2	103,2	0,000	0,169	0,179	113	0,280
17,696	533,342	533,5	535,5	0,0	102,6	103,4	0,000	0,169	0,179	114	0,279
17,807	533,370	533,5	535,5	0,0	101,9	102,8	0,000	0,169	0,179	115	0,281
18,035	533,374	533,5	535,5	0,0	100,5	101,3	0,000	0,169	0,179	116	0,284
17,746	533,394	533,5	535,5	0,0	102,3	103,2	0,000	0,169	0,179	117	0,280
17,857	533,417	533,5	535,5	0,0	101,5	102,4	0,000	0,169	0,179	118	0,282
17,735	533,445	533,5	535,6	0,0	102,2	103,2	0,000	0,169	0,179	119	0,280
17,554	533,452	533,5	535,6	0,0	103,0	103,7	0,000	0,169	0,179	120	0,277
17,728	533,474	533,5	535,6	0,0	101,9	103,1	0,000	0,169	0,179	121	0,280
18,014	533,498	533,5	535,6	0,0	100,6	101,3	0,000	0,169	0,179	122	0,284
17,790	533,511	533,5	535,6	0,0	101,9	103,1	0,000	0,169	0,180	123	0,281
17,740	533,516	533,5	535,7	0,0	102,3	103,0	0,000	0,169	0,180	124	0,280
17,896	533,531	533,6	535,7	0,0	101,5	102,4	0,000	0,169	0,179	125	0,282
17,735	533,541	533,6	535,7	0,0	102,3	103,2	0,000	0,169	0,179	126	0,280
17,510	533,557	533,6	535,7	0,0	103,5	104,3	0,000	0,169	0,179	127	0,276
17,864	533,572	533,6	535,7	0,0	101,7	102,5	0,000	0,169	0,179	128	0,282
17,689	533,563	533,7	535,7	0,0	102,6	103,2	0,000	0,169	0,179	129	0,279
17,723	533,578	533,7	535,7	0,0	102,5	103,1	0,000	0,169	0,179	130	0,279
17,695	533,589	533,7	535,8	0,0	102,6	103,6	0,000	0,169	0,179	131	0,279
17,863	533,598	533,7	535,8	0,0	101,7	102,5	0,000	0,169	0,179	132	0,282
17,805	533,609	533,7	535,8	0,0	101,8	102,8	0,000	0,169	0,179	133	0,281
17,805	533,624	533,8	535,8	0,0	102,1	102,6	0,000	0,169	0,179	134	0,281
17,753	533,634	533,8	535,8	0,0	102,3	103,2	0,000	0,169	0,179	135	0,280
17,804	533,637	533,8	535,8	0,0	102,2	103,0	0,000	0,169	0,179	136	0,281
17,689	533,663	533,8	535,8	0,0	102,7	103,1	0,000	0,169	0,179	137	0,279
17,817	533,679	533,9	535,9	0,0	102,1	102,8	0,000	0,169	0,179	138	0,281
17,859	533,760	534,1	536,0	0,0	101,4	102,4	0,000	0,169	0,179	139	0,282
17,748	533,930	534,3	536,2	0,0	102,3	103,0	0,000	0,169	0,179	140	0,280
17,747	534,146	534,5	536,4	0,0	102,2	103,0	0,000	0,169	0,179	141	0,280
17,812	534,236	534,7	536,6	0,0	101,8	102,7	0,000	0,169	0,179	142	0,281
17,875	534,238	534,7	536,7	0,0	101,6	102,3	0,000	0,169	0,179	143	0,282
17,882	534,218	534,6	536,6	0,0	101,5	102,1	0,000	0,169	0,179	144	0,282
17,878	534,223	534,6	536,6	0,0	101,6	102,4	0,000	0,169	0,179	145	0,282
17,875	534,220	534,5	536,6	0,0	101,5	102,5	0,000	0,169	0,179	146	0,282
17,818	534,202	534,5	536,6	0,0	101,9	102,8	0,000	0,169	0,179	147	0,281
17,877	534,207	534,4	536,5	0,0	101,5	102,1	0,000	0,169	0,179	148	0,282
17,817	534,226	534,4	536,5	0,0	101,9	102,6	0,000	0,169	0,179	149	0,281
17,815	534,243	534,4	536,5	0,0	101,9	102,7	0,000	0,169	0,179	150	0,281
17,819	534,254	534,4	536,5	0,0	102,0	102,7	0,000	0,169	0,179	151	0,281
17,785	534,253	534,4	536,5	0,0	102,1	103,0	0,000	0,169	0,179	152	0,280
17,821	534,276	534,4	536,5	0,0	101,9	102,8	0,000	0,169	0,179	153	0,281
17,768	534,274	534,4	536,5	0,0	102,5	102,9	0,000	0,169	0,179	154	0,280
17,998	534,292	534,4	536,6	0,0	101,1	101,8	0,000	0,169	0,179	155	0,284
17,824	534,325	534,4	536,6	0,0	102,1	102,5	0,000	0,169	0,179	156	0,281
17,924	534,346	534,4	536,6	0,0	101,5	102,0	0,000	0,169	0,179	157	0,282
17,948	534,357	534,3	536,6	0,0	101,3	102,3	0,000	0,169	0,179	158	0,283
17,945	534,365	534,4	536,5	0,0	101,5	102,0	0,000	0,169	0,179	159	0,283
17,940	534,378	534,4	536,5	0,0	101,2	102,1	0,000	0,169	0,179	160	0,283
17,942	534,369	534,4	536,5	0,0	101,0	102,2	0,000	0,169	0,179	161	0,283
17,828	534,403	534,4	536,5	0,0	101,9	102,8	0,000	0,169	0,179	162	0,281
17,943	534,426	534,4	536,6	0,0	101,6	102,1	0,000	0,169	0,179	163	0,283
17,886	534,442	534,4	536,6	0,0	101,6	102,4	0,000	0,169	0,179	164	0,282

17,832	534,483	534,4	536,6	0,0	102,0	102,7	0,000	0,169	0,179	165	0,281
17,893	534,495	534,4	536,6	0,0	101,7	102,5	0,000	0,169	0,179	166	0,282
17,774	534,505	534,5	536,6	0,0	102,4	103,1	0,000	0,169	0,179	167	0,280
17,768	534,539	534,5	536,6	0,0	102,2	103,2	0,000	0,169	0,179	168	0,280
17,659	534,560	534,5	536,7	0,0	103,1	103,9	0,000	0,169	0,179	169	0,278
17,772	534,583	534,5	536,7	0,0	102,2	103,3	0,000	0,169	0,179	170	0,280
18,062	534,618	534,5	536,7	0,0	100,9	101,4	0,000	0,169	0,179	171	0,284
17,646	534,651	534,5	536,7	0,0	103,1	103,8	0,000	0,169	0,179	172	0,278
17,947	534,659	534,5	536,7	0,0	101,2	102,4	0,000	0,169	0,179	173	0,283
17,889	534,706	534,5	536,7	0,0	101,8	102,5	0,000	0,169	0,179	174	0,282
17,990	534,705	534,5	536,8	0,0	101,2	101,9	0,000	0,169	0,179	175	0,283
17,950	534,744	534,5	536,8	0,0	101,1	102,2	0,000	0,169	0,179	176	0,283
17,904	534,742	534,6	536,8	0,0	101,9	102,5	0,000	0,169	0,179	177	0,282
17,728	534,773	534,6	536,8	0,0	102,8	103,6	0,000	0,169	0,179	178	0,279
17,958	534,800	534,6	536,8	0,0	101,5	102,2	0,000	0,169	0,179	179	0,283
17,659	534,809	534,7	536,8	0,0	103,0	103,8	0,000	0,169	0,179	180	0,278
17,978	534,821	534,8	536,8	0,0	101,1	102,0	0,000	0,169	0,179	181	0,283
17,873	534,835	534,8	536,8	0,0	101,5	102,3	0,000	0,169	0,179	182	0,282
17,878	534,880	534,8	536,8	0,0	101,8	102,6	0,000	0,169	0,179	183	0,282
17,926	534,903	534,7	536,8	0,0	101,4	102,0	0,000	0,169	0,179	184	0,283
17,752	534,931	534,7	536,9	0,0	101,9	103,0	0,000	0,169	0,179	185	0,280
17,927	534,956	534,7	536,9	0,0	101,2	102,0	0,000	0,169	0,179	186	0,283
17,822	534,981	534,7	536,9	0,0	101,7	102,2	0,000	0,169	0,179	187	0,281
17,748	535,030	534,7	536,9	0,0	102,4	103,0	0,000	0,169	0,179	188	0,280
17,742	535,039	534,8	537,0	0,0	102,0	103,1	0,000	0,169	0,179	189	0,280
17,985	535,067	534,7	537,0	0,0	100,8	101,5	0,000	0,169	0,179	190	0,284
17,858	535,102	534,8	537,0	0,0	101,5	102,4	0,000	0,169	0,179	191	0,282
17,809	535,115	534,8	537,0	0,0	101,9	102,7	0,000	0,169	0,179	192	0,281
17,865	535,143	534,8	537,0	0,0	101,4	102,3	0,000	0,169	0,179	193	0,282
17,747	535,169	534,8	537,0	0,0	102,2	103,0	0,000	0,169	0,179	194	0,280
17,738	535,181	534,9	537,0	0,0	101,9	102,9	0,000	0,169	0,179	195	0,280
17,694	535,214	534,9	537,0	0,0	102,4	103,3	0,000	0,169	0,179	196	0,279
17,793	535,242	534,9	537,0	0,0	101,7	102,6	0,000	0,169	0,179	197	0,281
17,675	535,254	534,9	537,1	0,0	102,4	103,1	0,000	0,169	0,179	198	0,279
17,758	535,288	534,9	537,1	0,0	101,9	103,0	0,000	0,169	0,179	199	0,280
17,730	535,320	534,9	537,1	0,0	102,2	102,8	0,000	0,169	0,179	200	0,280
17,849	535,323	535,0	537,1	0,0	101,5	102,1	0,000	0,169	0,179	201	0,282
17,972	535,329	535,1	537,2	0,0	100,9	101,4	0,000	0,169	0,179	202	0,284
17,838	535,337	535,1	537,1	0,0	101,2	102,0	0,000	0,169	0,179	203	0,282
18,008	535,342	535,1	537,1	0,0	100,4	101,1	0,000	0,169	0,179	204	0,284
17,709	535,367	535,1	537,2	0,0	102,1	103,2	0,000	0,169	0,179	205	0,280
17,895	535,395	535,0	537,2	0,0	100,8	101,6	0,000	0,169	0,179	206	0,283
17,799	535,400	535,1	537,2	0,0	101,7	102,4	0,000	0,169	0,179	207	0,281
17,751	535,432	535,1	537,2	0,0	101,7	102,6	0,000	0,169	0,179	208	0,280
17,781	535,442	535,1	537,2	0,0	101,8	102,4	0,000	0,169	0,179	209	0,281
17,954	535,464	535,1	537,2	0,0	100,5	101,2	0,000	0,169	0,179	210	0,284
18,007	535,476	535,1	537,2	0,0	100,4	101,1	0,000	0,169	0,179	211	0,284
17,776	535,491	535,1	537,2	0,0	101,5	102,4	0,000	0,169	0,179	212	0,281
17,958	535,529	535,1	537,3	0,0	100,7	101,2	0,000	0,169	0,179	213	0,284
17,832	535,544	535,1	537,3	0,0	101,4	101,9	0,000	0,169	0,179	214	0,282
17,941	535,550	535,1	537,3	0,0	100,5	101,5	0,000	0,169	0,179	215	0,284
18,006	535,550	535,1	537,3	0,0	100,3	101,0	0,000	0,169	0,179	216	0,284
17,891	535,572	535,1	537,3	0,0	101,2	101,8	0,000	0,169	0,179	217	0,283
17,714	535,599	535,1	537,3	0,0	101,9	103,0	0,000	0,169	0,179	218	0,280
18,051	535,588	535,1	537,3	0,0	99,9	100,9	0,000	0,169	0,179	219	0,285
17,662	535,603	535,2	537,3	0,0	102,2	103,2	0,000	0,169	0,179	220	0,279
17,778	535,602	535,1	537,3	0,0	101,6	102,4	0,000	0,169	0,179	221	0,281
17,664	535,606	535,1	537,4	0,0	102,4	103,1	0,000	0,169	0,179	222	0,279
17,890	535,595	535,2	537,4	0,0	101,0	101,8	0,000	0,169	0,179	223	0,283
17,697	535,604	535,3	537,4	0,0	102,6	103,2	0,000	0,169	0,179	224	0,278
17,770	535,623	535,3	537,4	0,0	101,4	102,3	0,000	0,169	0,179	225	0,281
17,832	535,625	535,3	537,4	0,0	101,2	102,1	0,000	0,169	0,179	226	0,282
17,825	535,644	535,3	537,4	0,0	101,2	102,2	0,000	0,169	0,179	227	0,282
17,762	535,634	535,3	537,4	0,0	101,5	102,2	0,000	0,169	0,179	228	0,281
17,844	535,630	535,3	537,4	0,0	101,3	102,1	0,000	0,169	0,179	229	0,282
17,896	535,630	535,4	537,4	0,0	100,9	101,6	0,000	0,169	0,179	230	0,283
17,783	535,639	535,4	537,4	0,0	101,5	102,3	0,000	0,169	0,179	231	0,281
17,772	535,661	535,4	537,4	0,0	101,5	102,3	0,000	0,169	0,179	232	0,281
17,822	535,585	535,4	537,4	0,0	101,3	102,1	0,000	0,169	0,179	233	0,282
17,871	535,449	535,3	537,3	0,0	100,9	101,8	0,000	0,169	0,179	234	0,283
17,750	535,332	535,1	537,1	0,0	101,4	102,1	0,000	0,169	0,179	235	0,281
17,759	535,276	534,9	537,0	0,0	101,3	102,4	0,000	0,169	0,179	236	0,281
17,823	535,253	534,7	536,9	0,0	101,3	102,4	0,000	0,169	0,179	237	0,282
17,765	535,242	534,7	536,9	0,0	101,6	102,4	0,000	0,169	0,179	238	0,281
17,763	535,255	534,7	536,9	0,0	101,6	102,2	0,000	0,169	0,179	239	0,281
17,885	535,234	534,7	536,9	0,0	101,1	101,9	0,000	0,169	0,179	240	0,283
17,705	535,257	534,7	536,9	0,0	101,7	102,5	0,000	0,169	0,179	241	0,280
17,819	535,275	534,8	537,0	0,0	101,2	101,8	0,000	0,169	0,179	242	0,282
17,769	535,286	534,9	537,0	0,0	101,6	102,5	0,000	0,169	0,179	243	0,281
17,711	535,308	535,0	537,1	0,0	101,8	102,7	0,000	0,169	0,179	244	0,280
17,846	535,306	535,1	537,1	0,0	101,2	101,9	0,000	0,169	0,179	245	0,282
17,758	535,291	535,2	537,1	0,0	101,4	102,5	0,000	0,169	0,179	246	0,281
17,879	535,293	535,2	537,2	0,0	100,7	101,7	0,000	0,169	0,179	247	0,283
17,935	535,336	535,2	537,2	0,0	100,5	101,6	0,000	0,169	0,179	248	0,284
17,757	535,336	535,2	537,2	0,0	101,5	102,3	0,000	0,169	0,179	249	0,281
17,873	535,338	535,2	537,3	0,0	100,7	101,6	0,000	0,169	0,179	250	0,283

17,622	535,381	535,2	537,3	0,0	102,3	103,0	0,000	0,169	0,179	251	0,279
17,707	535,419	535,2	537,3	0,0	101,8	102,5	0,000	0,169	0,179	252	0,280
17,821	535,424	535,2	537,3	0,0	101,1	102,0	0,000	0,169	0,179	253	0,282
17,657	535,456	535,2	537,3	0,0	102,1	102,9	0,000	0,169	0,179	254	0,279
17,765	535,407	535,2	537,3	0,0	101,5	102,5	0,000	0,169	0,179	255	0,281
17,762	535,530	535,3	537,4	0,0	101,5	102,5	0,000	0,169	0,179	256	0,281
17,816	535,520	535,3	537,4	0,0	101,2	101,9	0,000	0,169	0,179	257	0,282
17,822	535,547	535,3	537,4	0,0	101,2	101,9	0,000	0,169	0,179	258	0,282
17,759	535,560	535,3	537,4	0,0	101,6	102,1	0,000	0,169	0,179	259	0,281
17,690	535,570	535,3	537,4	0,0	101,9	102,7	0,000	0,169	0,179	260	0,280
17,818	535,579	535,3	537,4	0,0	101,0	102,1	0,000	0,169	0,179	261	0,282
17,701	535,601	535,4	537,5	0,0	101,8	102,5	0,000	0,169	0,179	262	0,280
17,758	535,605	535,4	537,5	0,0	101,4	102,4	0,000	0,169	0,179	263	0,281
17,702	535,599	535,4	537,5	0,0	101,8	102,6	0,000	0,169	0,179	264	0,280
17,676	535,603	535,4	537,5	0,0	100,8	101,5	0,000	0,169	0,179	265	0,283
17,825	535,601	535,5	537,6	0,0	101,2	102,1	0,000	0,169	0,179	266	0,282
17,709	535,605	535,6	537,6	0,0	101,9	102,7	0,000	0,169	0,179	267	0,280
17,705	535,602	535,6	537,6	0,0	101,9	102,6	0,000	0,169	0,179	268	0,280
17,821	535,630	535,6	537,6	0,0	101,2	102,0	0,000	0,169	0,179	269	0,282
17,707	535,644	535,6	537,6	0,0	101,7	102,5	0,000	0,169	0,179	270	0,280
17,874	535,636	535,6	537,6	0,0	100,5	101,4	0,000	0,168	0,179	271	0,283
17,816	535,661	535,6	537,6	0,0	101,1	101,7	0,000	0,168	0,178	272	0,282
17,817	535,671	535,6	537,6	0,0	101,1	102,0	0,000	0,169	0,179	273	0,282
17,929	535,689	535,6	537,6	0,0	100,5	101,1	0,000	0,169	0,179	274	0,284
17,701	535,693	535,6	537,6	0,0	101,8	102,5	0,000	0,169	0,179	275	0,280
17,818	535,710	535,6	537,7	0,0	101,1	101,9	0,000	0,169	0,179	276	0,282
17,646	535,744	535,5	537,6	0,0	102,1	102,7	0,000	0,169	0,179	277	0,279
17,762	535,737	535,6	537,7	0,0	101,3	102,2	0,000	0,169	0,179	278	0,281
17,931	535,756	535,6	537,7	0,0	100,4	101,2	0,000	0,169	0,179	279	0,284
17,561	535,773	535,5	537,7	0,0	102,4	102,9	0,000	0,168	0,178	280	0,278
17,992	535,808	535,5	537,7	0,0	100,3	100,9	0,000	0,169	0,178	281	0,284
17,761	535,801	535,6	537,7	0,0	101,3	102,4	0,000	0,169	0,179	282	0,281
17,640	535,802	535,6	537,7	0,0	102,0	102,9	0,000	0,168	0,179	283	0,279
17,532	535,819	535,6	537,7	0,0	102,8	103,6	0,000	0,168	0,179	284	0,277
17,981	535,815	535,6	537,7	0,0	100,2	100,9	0,000	0,169	0,179	285	0,284
17,824	535,851	535,6	537,8	0,0	101,3	101,9	0,000	0,169	0,179	286	0,282
17,471	535,857	535,6	537,8	0,0	103,1	103,9	0,000	0,169	0,179	287	0,276
17,877	535,890	535,6	537,8	0,0	100,7	101,7	0,000	0,168	0,179	288	0,283
17,892	535,858	535,7	537,8	0,0	100,6	101,4	0,000	0,168	0,179	289	0,283
17,883	535,860	535,8	537,8	0,0	100,8	101,5	0,000	0,168	0,179	290	0,283
17,710	535,843	535,8	537,8	0,0	101,8	102,7	0,000	0,169	0,179	291	0,280
17,774	535,865	535,8	537,8	0,0	101,3	102,1	0,000	0,169	0,179	292	0,281
17,759	535,866	535,7	537,8	0,0	101,3	102,1	0,000	0,168	0,179	293	0,281
17,705	535,876	535,7	537,8	0,0	101,8	102,5	0,000	0,169	0,179	294	0,280
17,585	535,884	535,7	537,8	0,0	102,3	103,1	0,000	0,169	0,179	295	0,278
17,929	535,896	535,7	537,8	0,0	100,5	101,2	0,000	0,169	0,179	296	0,284
17,813	535,915	535,6	537,8	0,0	100,9	101,7	0,000	0,168	0,179	297	0,282
17,820	535,919	535,6	537,8	0,0	101,0	102,0	0,000	0,168	0,179	298	0,282
17,820	535,899	535,7	537,8	0,0	101,2	101,9	0,000	0,169	0,179	299	0,282
17,822	535,889	535,7	537,8	0,0	101,1	101,9	0,000	0,169	0,179	300	0,282
17,844	535,898	535,6	537,8	0,0	101,1	101,8	0,000	0,169	0,179	301	0,282
17,589	535,920	535,7	537,9	0,0	102,4	103,3	0,000	0,169	0,179	302	0,278
17,879	535,928	535,7	537,9	0,0	100,7	101,7	0,000	0,169	0,179	303	0,283
18,099	535,947	535,7	537,9	0,0	99,4	100,5	0,000	0,169	0,179	304	0,286
17,818	535,949	535,8	537,9	0,0	101,1	102,0	0,000	0,169	0,179	305	0,282
17,702	535,943	535,8	537,9	0,0	101,6	102,6	0,000	0,169	0,179	306	0,280
17,701	535,924	535,8	537,9	0,0	101,8	102,5	0,000	0,168	0,179	307	0,280
17,824	535,946	535,8	537,9	0,0	101,1	101,8	0,000	0,169	0,179	308	0,282
17,826	535,934	535,9	538,0	0,0	101,1	102,0	0,000	0,169	0,179	309	0,282
17,928	535,893	535,9	538,0	0,0	100,4	101,2	0,000	0,169	0,179	310	0,284
17,724	535,787	535,9	537,9	0,0	101,4	102,1	0,000	0,169	0,179	311	0,280
17,799	535,589	535,7	537,7	0,0	101,0	101,6	0,000	0,169	0,179	312	0,282
17,951	535,384	535,3	537,4	0,0	100,0	100,7	0,000	0,169	0,179	313	0,284
17,652	535,160	535,0	537,1	0,0	101,4	102,5	0,000	0,169	0,179	314	0,280
17,709	534,928	534,7	536,9	0,0	101,2	102,0	0,000	0,169	0,179	315	0,281
17,871	534,669	534,5	536,7	0,0	100,4	101,3	0,000	0,169	0,179	316	0,284
17,639	534,417	534,3	536,5	0,0	101,5	102,5	0,000	0,169	0,179	317	0,280
17,583	534,162	534,2	536,4	0,0	101,9	102,6	0,000	0,169	0,179	318	0,279
17,863	533,965	534,0	536,3	0,0	100,2	101,1	0,000	0,169	0,179	319	0,284
17,810	533,836	533,7	536,1	0,0	100,7	101,3	0,000	0,169	0,179	320	0,283
17,731	533,678	533,4	535,9	0,0	101,0	101,8	0,000	0,169	0,179	321	0,282
17,673	533,542	533,2	535,8	0,0	101,4	101,9	0,000	0,169	0,179	322	0,281
17,621	533,400	532,9	535,7	0,0	101,7	102,5	0,000	0,169	0,179	323	0,280
17,781	533,294	532,6	535,5	0,0	100,7	101,3	0,000	0,169	0,179	324	0,283
17,376	533,157	532,4	535,4	0,0	103,0	103,8	0,000	0,169	0,179	325	0,276
17,663	532,959	532,3	535,3	0,0	101,3	101,8	0,000	0,169	0,179	326	0,281
17,735	532,767	532,4	535,3	0,0	101,0	101,5	0,000	0,169	0,179	327	0,282
17,658	532,649	532,5	535,2	0,0	101,3	102,2	0,000	0,169	0,179	328	0,281
17,494	532,544	532,4	535,2	0,0	102,3	103,1	0,000	0,169	0,180	329	0,278
17,881	532,451	532,3	535,1	0,0	100,3	100,9	0,000	0,170	0,179	330	0,284
17,890	532,385	532,2	535,0	0,0	100,4	100,5	0,000	0,170	0,179	331	0,284
17,730	532,320	532,0	534,9	0,0	101,1	101,8	0,000	0,170	0,179	332	0,282
17,760	532,262	531,8	534,7	0,0	101,0	101,5	0,000	0,170	0,180	333	0,282
17,432	532,201	531,6	534,6	0,0	103,1	103,7	0,000	0,170	0,180	334	0,277
17,546	532,111	531,7	534,5	0,0	102,2	102,9	0,000	0,170	0,180	335	0,279
17,590	532,023	531,7	534,5	0,0	101,6	102,4	0,000	0,170	0,180	336	0,280

17,685	531,905	531,7	534,5	0,0	101,3	102,1	0,000	0,169	0,180	337	0,281
17,619	531,810	531,6	534,4	0,0	101,6	102,4	0,000	0,169	0,180	338	0,280
17,654	531,689	531,7	534,4	0,0	101,7	102,2	0,000	0,170	0,180	339	0,281
17,658	531,605	531,6	534,3	0,0	101,5	102,3	0,000	0,170	0,180	340	0,281
17,659	531,519	531,6	534,3	0,0	101,5	102,1	0,000	0,170	0,180	341	0,281
17,771	531,401	531,6	534,3	0,0	100,9	101,4	0,000	0,170	0,180	342	0,283
17,485	531,325	531,5	534,2	0,0	102,6	103,3	0,000	0,170	0,180	343	0,278
17,661	531,264	531,4	534,2	0,0	101,7	102,3	0,000	0,170	0,180	344	0,281
17,707	531,177	531,3	534,0	0,0	101,2	102,0	0,000	0,170	0,180	345	0,282
17,699	531,119	531,3	534,0	0,0	101,3	102,0	0,000	0,170	0,180	346	0,282
17,549	531,070	531,4	534,0	0,0	102,4	102,9	0,000	0,170	0,180	347	0,279
17,725	531,050	531,4	534,1	0,0	101,2	101,8	0,000	0,170	0,180	348	0,282
17,665	531,061	531,4	534,0	0,0	101,7	102,5	0,000	0,170	0,180	349	0,281
17,794	531,096	531,4	534,0	0,0	101,1	101,8	0,000	0,170	0,180	350	0,283
17,610	531,151	531,5	534,0	0,0	102,1	102,7	0,000	0,170	0,180	351	0,280
17,748	531,242	531,5	534,0	0,0	101,5	101,9	0,000	0,170	0,179	352	0,282
17,754	531,306	531,6	534,1	0,0	101,3	101,8	0,000	0,170	0,179	353	0,282
17,646	531,420	531,7	534,1	0,0	102,1	102,5	0,000	0,170	0,179	354	0,280
17,599	531,514	531,9	534,2	0,0	102,4	102,9	0,000	0,170	0,179	355	0,279
17,707	531,576	532,0	534,3	0,0	101,8	102,4	0,000	0,170	0,180	356	0,281
17,823	531,682	532,1	534,3	0,0	101,2	101,7	0,000	0,170	0,180	357	0,283
17,700	531,753	532,2	534,5	0,0	101,5	102,5	0,000	0,169	0,180	358	0,281
17,596	531,844	532,3	534,5	0,0	102,4	102,9	0,000	0,169	0,179	359	0,279
17,771	531,929	532,4	534,6	0,0	101,4	102,1	0,000	0,169	0,179	360	0,282
17,836	532,018	532,5	534,7	0,0	100,9	101,8	0,000	0,169	0,180	361	0,283
17,690	532,097	532,7	534,7	0,0	100,7	101,4	0,000	0,169	0,179	362	0,284
17,829	532,173	532,7	534,8	0,0	100,9	101,8	0,000	0,169	0,180	363	0,283
17,958	532,308	532,8	534,8	0,0	100,5	101,2	0,000	0,169	0,180	364	0,284
17,887	532,370	532,8	534,9	0,0	100,7	101,5	0,000	0,169	0,180	365	0,284
17,709	532,362	532,8	534,8	0,0	101,5	102,8	0,000	0,169	0,180	366	0,281
17,477	532,329	532,6	534,7	0,0	102,9	103,7	0,000	0,169	0,180	367	0,277
17,764	532,350	532,5	534,7	0,0	101,2	102,0	0,000	0,169	0,180	368	0,282
17,711	532,354	532,5	534,6	0,0	101,8	102,5	0,000	0,170	0,180	369	0,281
17,714	532,378	532,4	534,7	0,0	101,5	102,5	0,000	0,169	0,180	370	0,281
17,906	532,443	532,5	534,7	0,0	100,6	101,3	0,000	0,169	0,180	371	0,284
17,720	532,491	532,6	534,8	0,0	101,6	102,5	0,000	0,169	0,180	372	0,281
17,835	532,569	532,7	534,9	0,0	101,0	101,5	0,000	0,169	0,179	373	0,283
17,836	532,633	532,8	534,9	0,0	101,0	102,0	0,000	0,169	0,179	374	0,283
17,726	532,686	532,9	535,0	0,0	101,5	102,3	0,000	0,169	0,180	375	0,281
17,782	532,752	533,0	535,1	0,0	101,4	102,1	0,000	0,169	0,179	376	0,282
17,783	532,807	533,1	535,2	0,0	101,2	102,2	0,000	0,169	0,180	377	0,282
17,742	532,852	533,1	535,2	0,0	101,6	102,3	0,000	0,169	0,179	378	0,281
17,727	532,893	533,1	535,3	0,0	101,7	102,4	0,000	0,169	0,179	379	0,281
17,728	532,952	533,2	535,3	0,0	101,5	102,0	0,000	0,169	0,179	380	0,281
17,741	532,997	533,4	535,4	0,0	101,6	102,2	0,000	0,169	0,179	381	0,281
17,901	533,026	533,4	535,4	0,0	100,7	101,5	0,000	0,169	0,179	382	0,284
17,790	533,073	533,5	535,5	0,0	101,2	102,1	0,000	0,169	0,179	383	0,282
17,731	533,306	533,5	535,5	0,0	101,5	102,2	0,000	0,169	0,179	384	0,281
17,795	533,933	533,7	535,9	0,0	101,3	101,9	0,000	0,169	0,179	385	0,282
17,962	534,572	534,3	536,5	0,0	100,1	100,9	0,000	0,169	0,179	386	0,284
17,908	534,945	534,6	536,9	0,0	100,5	101,1	0,000	0,169	0,179	387	0,284
17,804	535,033	534,8	537,0	0,0	101,0	102,0	0,000	0,169	0,179	388	0,282
17,978	535,022	534,8	537,1	0,0	100,1	100,8	0,000	0,169	0,179	389	0,284
17,895	535,045	534,8	537,0	0,0	100,9	101,4	0,000	0,169	0,179	390	0,283
17,930	535,028	534,8	537,3	0,0	100,6	101,2	0,000	0,169	0,179	391	0,284
18,047	534,977	534,8	537,3	0,0	100,0	100,5	0,000	0,169	0,179	392	0,285
17,986	534,931	534,8	537,2	0,0	100,2	101,0	0,000	0,169	0,179	393	0,284
18,099	534,861	534,8	537,2	0,0	99,6	100,4	0,000	0,169	0,179	394	0,286
18,204	534,797	534,8	537,1	0,0	98,8	99,6	0,000	0,169	0,179	395	0,288
18,039	534,773	534,8	537,1	0,0	99,8	100,7	0,000	0,169	0,179	396	0,285
17,754	534,741	534,7	537,0	0,0	101,6	102,1	0,000	0,169	0,179	397	0,281
18,004	534,710	534,6	537,0	0,0	100,1	100,8	0,000	0,169	0,179	398	0,285
17,975	534,713	534,6	536,9	0,0	100,2	101,0	0,000	0,169	0,179	399	0,284
17,867	534,668	534,6	536,9	0,0	100,9	101,7	0,000	0,169	0,179	400	0,283
17,854	534,670	534,6	536,9	0,0	100,9	101,7	0,000	0,169	0,179	401	0,282
17,924	534,646	534,7	536,9	0,0	100,3	101,3	0,000	0,169	0,179	402	0,284
17,730	534,640	534,8	536,9	0,0	101,6	102,5	0,000	0,169	0,179	403	0,280
17,973	534,639	534,7	536,9	0,0	100,2	100,8	0,000	0,169	0,179	404	0,284
17,866	534,639	534,7	536,8	0,0	100,7	101,3	0,000	0,169	0,178	405	0,283
17,963	534,638	534,7	536,8	0,0	100,3	101,2	0,000	0,169	0,179	406	0,284
17,808	534,644	534,6	536,8	0,0	101,2	101,9	0,000	0,169	0,179	407	0,282
17,923	534,622	534,6	536,8	0,0	100,4	101,2	0,000	0,169	0,179	408	0,284
17,926	534,640	534,6	536,8	0,0	100,5	101,2	0,000	0,169	0,179	409	0,284
17,976	534,626	534,6	536,8	0,0	100,2	100,9	0,000	0,169	0,179	410	0,284
17,811	534,631	534,6	536,8	0,0	101,3	102,2	0,000	0,169	0,179	411	0,282
17,807	534,629	534,6	536,9	0,0	101,3	102,0	0,000	0,169	0,179	412	0,282
17,919	534,646	534,6	536,9	0,0	100,4	101,3	0,000	0,169	0,179	413	0,283
17,693	534,634	534,6	536,9	0,0	101,9	102,7	0,000	0,169	0,179	414	0,280
17,888	534,632	534,6	536,9	0,0	100,8	101,6	0,000	0,169	0,179	415	0,283
17,461	460,000	534,6	536,9	0,0	103,1	103,9	0,000	0,169	0,179	416	0,276

APPENDIX 3: Calibration data

POLYTESTS
TESTING THROUGH YOUR REALITY

TEST DATA PACKAGE

CLIENT	Hearthstone	PROJECT NUMBER	PI-20294
PRODUCT	Wood heater	SAMPLE ID#	QI-20457
MODEL	Heritage 8024		
STANDARDS	EPA, Method 28R, ASTME2515-11,		

TEST EQUIPMENT

ITEM	EQUIPMENT TYPE	MANUFACTURER	EQUIPMENT #	CALIBRATION DUE DATE	COMPLIES WITH REQUIREMENTS
1	Digital Manometer	Dwyer	EM-006	2024 May	Y
2	Digital Manometer	Dwyer	EM-249	2024 May	Y
3	Data acquisition System	Keithley	EM-147	2024 May	Y
4	analytical scale 200gr.	Ohaus	EM-051	2023 nov	Y
5	Weight 2kg	N/A	EM-090	2027 MARS	Y
6	Pitot tube	Dwyer	EM-296	Verif. before use	Y
7	Scale 0-1000lbs Rough Deck	Rice lake	EM-114 / EM-137	2024 April	Y
8	Gas analyzer	Siemen's	EM-118	Verification before use	Y
9	Vacuum gauge	Dwyer	EM-126	2024 May	Y
10	Vacuum gauge	Dwyer	EM-127	2024 May	Y
11	Calibration weight 100mg	Troemer	EM-335	2027-March	Y
12	Calibration weight 200g	Troemer	EM-129	2027 March	Y
13	Temperature humidity meter	Fluke	EM-136	2024 May	Y
14	Digital manometer	Dwyer	EM 313	2024 May	Y
15	Measuring tape	Stanley	EM-224	2024May	Y
16	Chronometer	Extech	EM-175	2023 December	Y
17	Dry gas meter	Shinagawa	EM-178	2024 January	Y
18	Dry gas meter	Shinagawa	EM-179	2024 January	Y
19	Dry gas meter	Shinagawa	EM-318	2024 January	Y
20	Dry gas meter	Am. meter	EM-130	2024 January	Y
21	Calibration gas	Praxair	EM-336	2030	Y
22	Calibration gas	Praxair	EM-338	2030	Y
23	Thermometer	Fluke	EM-001	2024 May	Y
24	20 ch. card Thermocouple	Keithley	EM-015	2024 November	Y
25	20 ch. card Thermocouple	Keithley	EM-154	2024 November	Y
26	Barometer	Control company	EM 304	2024 January	Y
27	Hot wire	testo	EM 332	2024 January	Y
28	Weight 10kg	N/A	EM-205	2026 MARS	Y
29	Calibration block	Delmhorst	EM-334	2024 January	Y
30	Vacuum gauge	Dwyer	EM-340	2024 january	Y
31	Wood scale	Ohaus	EM-204	2024 april	Y

Instrumentation Saint•Laurent Inc.
Certified ISO 17025

CLAS NRC·CNRC
CLAS 2010-02

80 rue de la montagne
St-Joseph du lac
(Québec), J0N 1M0
Phone: (450) 473-6168
Fax: (450) 473-5207
info@instrumentationsaintlaurent.com

CALIBRATION CERTIFICATE

CERTIFICATE #	CE-EM-001 2023-05-11

CLIENT	
Company:	Services Polytests Inc
Address:	695 B rue Gaudette
	St-Jean-sur-Richelieu, Québec, J3B 7S7

CALIBRATION SPECIFICATION	
Service Procedure:	4IN9105
Required Accuracy:	+/- 2.0°C
Calibration Frequency:(days)	365

INSTRUMENT SPECIFICATION			
Instrument Type:	Indicator	Input Type:	Temp
Manufacturer:	Fluke	Output Type:	Digitale
Model #:	52-II	Measurement Type:	Temperature
Serial #:	90630037	Range:	Divers
Location:	N.A.	Version:	Machine: N.A.

CALIBRATORS SPECIFICATION			
Calibrator:	Fluke 744	Certification #:	2023003233
Serial #:	8180008	Certification Date:	2023-04-26
Certified by:	Alpha Controls	Next Certification:	2024-04-26
Comments:			

5F09105 Version 1

Copyright of this certificate belongs to Inst. St-Laurent Inc. and must be reproduced in full, unless a written permission of Inst. St-Laurent Inc.

Instrumentation Saint•Laurent Inc.
Certified ISO 17025

CLAS NRC-CNRC
CLAS 2010-02

SCC Accredited LAB
LAB Accredited CCN
AP589

80 rue de la montagne
St-Joseph du lac
(Québec), J0N 1M0
Phone: (450) 473-6160
Fax: (450) 473-5207
info@instrumentationsaintlaurent.com

CALIBRATION CERTIFICATE

CERTIFICATE #	CE-EM-001 2023-05-11

CALIBRATION RESULTS						
Entry Source	Given Value	Actual Value	Deviation Error	After Calib Value	Accuracy	Uncertainty
Conformity	Comment					
0.0 °C	0.0 °C	0.0 °C	0.0 °C	0.0 °C	+/- 2.0 °C	± 0.2 °C
Compliant	T1 typeJ					
125.0 °C	125.0 °C	125.0 °C	0.0 °C	125.0 °C	+/- 2.0 °C	± 0.2 °C
Compliant	T1 typeJ					
250.0 °C	250.0 °C	250.0 °C	0.0 °C	250.0 °C	+/- 2.0 °C	± 0.2 °C
Compliant	T1 typeJ					
375.0 °C	375.0 °C	375.0 °C	0.0 °C	375.0 °C	+/- 2.0 °C	± 0.2 °C
Compliant	T1 typeJ					
500.0 °C	500.0 °C	500.0 °C	0.0 °C	500.0 °C	+/- 2.0 °C	± 0.2 °C
Compliant	T1 typeJ					
0.0 °C	0.0 °C	0.0 °C	0.0 °C	0.0 °C	+/- 2 °C	± 0.2 °C
Compliant	T2 typeJ					
125.0 °C	125.0 °C	125.0 °C	0.0 °C	125.0 °C	+/- 2 °C	± 0.2 °C
Compliant	T2 typeJ					
250.0 °C	250.0 °C	250.0 °C	0.0 °C	250.0 °C	+/- 2.0 °C	± 0.2 °C
Compliant	T2 typeJ					
375.0 °C	375.0 °C	375.0 °C	0.0 °C	375.0 °C	+/- 2.0 °C	± 0.2 °C
Compliant	T2 typeJ					
500.0 °C	500.0 °C	500.0 °C	0.0 °C	500.0 °C	+/- 2.0 °C	± 0.2 °C
Compliant	T2 typeJ					
0.0 °C	0.0 °C	0.2 °C	+0.2 °C	0.2 °C	+/- 2.0 °C	± 0.3 °C
Compliant	T1 typeK					
125.0 °C	125.0 °C	125.2 °C	+0.2 °C	125.2 °C	+/- 2.0 °C	± 0.3 °C
Compliant	T1 typeK					
250.0 °C	250.0 °C	250.1 °C	+0.1 °C	250.1 °C	+/- 2.0 °C	± 0.3 °C
Compliant	T1 typeK					
375.0 °C	375.0 °C	375.1 °C	+0.1 °C	375.1 °C	+/- 2.0 °C	± 0.3 °C
Compliant	T1 typeK					
500.0 °C	500.0 °C	500.1 °C	+0.1 °C	500.1 °C	+/- 2.0 °C	± 0.3 °C
Compliant	T1 typeK					
0.0 °C	0.0 °C	0.2 °C	+0.2 °C	0.2 °C	+/- 2.0 °C	± 0.3 °C
Compliant	T2 typeK					
125.0 °C	125.0 °C	125.2 °C	+0.2 °C	125.2 °C	+/- 2.0 °C	± 0.3 °C
Compliant	T2 typeK					
250.0 °C	250.0 °C	250.2 °C	+0.2 °C	250.2 °C	+/- 2.0 °C	± 0.3 °C
Compliant	T2 typeK					
375.0 °C	375.0 °C	375.1 °C	+0.1 °C	375.1 °C	+/- 2.0 °C	± 0.3 °C
Compliant	T2 typeK					

Version 1

Copyright of this certificate belongs to Inst. St-Laurent Inc. and must be reproduced in full, unless a written permission of Inst. St-Laurent Inc.

Instrumentation Saint-Laurent inc.
Certified ISO 17025

CLAS 2015-02

80 rue de la montagne
St-Joseph du lac
(Québec), J0N 1M0
Phone: (450)-473-6169
Fax: (450) 473-5207
info@instrumentationsaintlaurent.com

CALIBRATION CERTIFICATE

CERTIFICATE #	CE-EM-001 2023-05-11

CALIBRATION RESULTS

Entry Source	Given Value	Actual Value	Deviation Error	After Calib Value	Accuracy	Uncertainty
Conformity	Comment					
500.0 °C	500.0 °C	500.0 °C	0.0 °C	500.0 °C	+/- 2.0 °C	± 0.3 °C
Compliant	T2 typeK					

Environmental Conditions:	Temperature: 21 °C	Humidity: 30 %RH
Comments:		

CALIBRATION DATE/ISSUANCE OF CERTIFICATE

Calibration Date:	2023-05-11
Next Calibration:	2024-05-11
Certificate Date:	2023-05-11

CALIBRATION CONFORMITY

	Before	After
Compliant:	X	X
Non Compliant:		

- Instrumentation St. Laurent Inc. Certify that the above instrument, meets or exceeds the specifications established by the manufacturer. The company's quality system complies with the requirements of ISO 17025:2017 and the standards used to perform the calibration is traceable to NRC and / or NIST.
- Reported uncertainties represent a 95 % of confidence level assuming a normal distribution k=2.
- The declaration of conformity does not include Instrumentation St-Laurent Inc. uncertainty measurement. Decision rule is based on binary statement for simple acceptance rule against ILAC G8 standard and test tolerance limits are based on customer specifications, unless otherwise specified.
- The results presented in this certificate relate only to objects subject to calibration.
- It is the customer's responsibility to ensure that calibrated equipment meets its intended use.
- The date format used in this certificate is: YYYY-MM-DD.

Assessment Service Calibration Laboratory (ASCL) of the National Research Council of Canada (NRC) has assessed and certified calibration laboratory's ability and traceability to the International System of Units (SI) or to standards acceptable according to ASCL. This calibration certificate is issued in accordance with the terms of ASCL certification and accreditation requirements of the Standards Council of Canada (SCC). SCC accreditation number: #669. ASCL and SCC does not guarantee the accuracy of individual calibrations by accredited laboratories.

Marc Gingras - Technicien

May 17th 2023

5F09105 Version 1

Copyright of this certificate belongs to Inst. St-Laurent Inc. and must be reproduced in full, unless a written permission of Inst. St-Laurent Inc.

Instrumentation Saint-Laurent Inc.
Certified ISO 17025

80 rue de la montagne
St-Joseph du lac
(Québec), J0N 1M0
Phone: (450) 473-6160
Fax: (450) 473-5207
info@instrumentationsaintlaurent.com

CALIBRATION CERTIFICATE

CERTIFICATE #	CE-EM-006 2023-05-11

CLIENT	
Company:	Services Polytests Inc
Address:	695 B rue Gaudette
	St-Jean-sur-Richelieu, Québec, J3B 7S7

CALIBRATION SPECIFICATION	
Service Procedure:	4IN9106
Required Accuracy:	+\-0.25"H2O
Calibration Frequency:(days)	365

INSTRUMENT SPECIFICATION			
Instrument Type:	Indicator	Input Type:	Pression
Manufacturer:	Dwyer	Output Type:	Digitale
Model #:	MS-321-LCD	Measurement Type:	Pressure
Serial #:	E47U020014	Range:	0-0,5"H2O
Location:	N.A.	Version:	Machine: N.A.

CALIBRATORS SPECIFICATION			
Calibrator:	Crystal XP2i 300	Certification #:	2022006892
Serial #:	258139	Certification Date:	2022-09-09
Certified by:	Alpha Controls	Next Certification:	2023-09-09
Comments:			
Calibrator:	Fluke 744	Certification #:	2023003233
Serial #:	9160008	Certification Date:	2023-04-26
Certified by:	Alpha Controls	Next Certification:	2024-04-26
Comments:			

5F09106 Version 1

Copyright of this certificate belongs to Inst. St-Laurent Inc. and must be reproduced in full, unless a written permission of Inst. St-Laurent Inc.

Instrumentation Saint-Laurent Inc.
Certified ISO 17025

CLAS NRC-CNRC
CLAS 2010-02

80 rue de la montagne
St-Joseph du lac
(Québec), J0N 1M0
Phone: (450) 473-6168
Fax: (450) 473-5207
info@instrumentationsaintlaurent.com

CALIBRATION CERTIFICATE

CERTIFICATE #	CE-EM-006 2023-05-11

CALIBRATION RESULTS

Entry Source	Given Value	Actual Value	Deviation Error	After Calib Value	Accuracy	Uncertainty
Conformity	Comment					
0.0000 "H2O	0.000 "H2O	-0.002 "H2O	-0.002 "H2O	-0.002 "H2O	+\-0.25 "H2O	± 0.5 "H2O
Compliant	Verification of the indicator					
0.2500 "H2O	0.250 "H2O	0.244 "H2O	-0.006 "H2O	0.244 "H2O	+\-0.25 "H2O	± 0.5 "H2O
Compliant	Verification of the indicator					
0.5000 "H2O	0.500 "H2O	0.495 "H2O	-0.005 "H2O	0.495 "H2O	+\-0.25 "H2O	± 0.5 "H2O
Compliant	Verification of the indicator					
0.7500 "H2O	0.750 "H2O	0.750 "H2O	0.000 "H2O	0.750 "H2O	+\-0.25 "H2O	± 0.5 "H2O
Compliant	Verification of the indicator					
1.0000 "H2O	1.000 "H2O	0.994 "H2O	-0.006 "H2O	0.994 "H2O	+\-0.25 "H2O	± 0.5 "H2O
Compliant	Verification of the indicator					
0.7500 "H2O	0.7500	0.750	0.00	0.750	+\-0.25	± 0.5
Compliant	Verification of the indicator					
0.5000 "H2O	0.5000	0.497	-0.003	0.497	+\-0.25	± 0.5
Compliant	Verification of the indicator					
0.2500 "H2O	0.2500	0.246	-0.014	0.246	+\-0.25	± 0.5
Compliant	Verification of the indicator					
0.0000 "H2O	0.0000	-0.002	-0.002	-0.002	+\-0.25	± 0.5
Compliant	Verification of the indicator					
0.0000 "H2O	0.0000 V.DC.	0.0021 V.DC.	+0.0021 V.DC.	0.0021 V.DC.	+\-0.25 V.DC.	0.5 V.DC.
Compliant	Verification of the analogic output					
0.2500 "H2O	2.5000 V.DC.	2.4300 V.DC.	-0.0700 V.DC.	2.4300 V.DC.	+\-0.25 V.DC.	0.5 V.DC.
Compliant	Verification of the analogic output					
0.5000 "H2O	5.0000 V.DC.	4.9469 V.DC.	-0.0531 V.DC.	4.9469 V.DC.	+\-0.25 V.DC.	0.5 V.DC.
Compliant	Verification of the analogic output					
0.7500 "H2O	7.5000 V.DC.	7.4356 V.DC.	-0.0644 V.DC.	7.4356 V.DC.	+\-0.25 V.DC.	0.5 V.DC.
Compliant	Verification of the analogic output					
1.0000 "H2O	10.0000 V.DC.	9.9064 V.DC.	-0.0936 V.DC.	9.9064 V.DC.	+\-0.25 V.DC.	0.5 V.DC.
Compliant	Verification of the analogic output					
0.7500 "H2O	7.5000 V.DC.	7.4359 V.DC.	-0.0641 V.DC.	7.4359 V.DC.	+\-0.25 V.DC.	0.5 V.DC.
Compliant	Verification of the analogic output					
0.5000 "H2O	5.0000 V.DC.	4.9466 V.DC.	-0.0534 V.DC.	4.9466 V.DC.	+\-0.25 V.DC.	0.5 V.DC.
Compliant	Verification of the analogic output					
0.2500 "H2O	2.5000 V.DC.	2.4304 V.DC.	-0.0696 V.DC.	2.4304 V.DC.	+\-0.25 V.DC.	0.5 V.DC.
Compliant	Verification of the analogic output					
0.0000 "H2O	0.0000 V.DC.	0.0021 V.DC.	+0.0021 V.DC.	0.0021 V.DC.	+\-0.25 V.DC.	0.5 V.DC.
Compliant	Verification of the analogic output					

Environmental Conditions: Temperature: 21 °C Humidity: 30 %RH

Comments:

Version 1

Copyright of this certificate belongs to Inst. St-Laurent Inc. and must be reproduced in full, unless a written permission of Inst. St-Laurent Inc.

Instrumentation Saint•Laurent Inc.
Certified ISO 17025

CLAS 3010-02

80 rue de la montagne
St-Joseph du lac
(Québec), J0N 1M0
Phone: (450) 473-6180
Fax: (450) 473-5007
info@instrumentationsaintlaurent.com

CALIBRATION CERTIFICATE

CERTIFICATE #	CE-EM-006 2023-05-11

CALIBRATION DATE/ISSUANCE OF CERTIFICATE	
Calibration Date:	2023-05-11
Next Calibration:	2024-05-11
Certificate Date:	2023-05-11

CALIBRATION CONFORMITY		
	Before	After
Compliant:	X	X
Non Compliant:		

- Instrumentation St. Laurent Inc. Certify that the above instrument, meets or exceeds the specifications established by the manufacturer. The company's quality system complies with the requirements of ISO 17025 :2017 and the standards used to perform the calibration is traceable to NRC and / or NIST.
- Reported uncertainties represent a 95 % of confidence level assuming a normal distribution k=2.
- The declaration of conformity does not include Instrumentation St-Laurent Inc. uncertainty measurement. Decision rule is based on binary statement for simple acceptance rule against ILAC G8 standard and test tolerance limits are based on customer specifications, unless otherwise specified.
- The results presented in this certificate relate only to objects subject to calibration.
- It is the customer's responsability to ensure that calibrated equipment meets its intended use.
- The date format used in this certificate is: YYYY-MM-DD.

Assessment Service Calibration Laboratory (ASCL) of the National Research Council of Canada (NRC) has assessed and certified calibration laboratory's ability and traceability to the International System of Units (SI) or to standards acceptable according to ASCL. This calibration certificate is issued in accordance with the terms of ASCL certification and accreditation requirements of the Standards Council of Canada (SCC). SCC accreditation number: # 669. ASCL and SCC does not guarantee the accuracy of individual calibrations by accredited laboratories.

Marc Gingras - Technicien

May 17th 2023

Copyright of this certificate belongs to Inst. St-Laurent Inc. and must be reproduced in full, unless a written permission of Inst. St-Laurent Inc.

Instrumentation Saint-Laurent Inc.
Certified ISO 17025

CLAS
NRC-CNRC
CLAS 2010-02

86 rue de la montagne
St-Joseph du lac
(Québec), J0N 1M0
Phone: (450) 473-6188
Fax: (450) 473-5297
info@instrumentationsaintlaurent.com

CALIBRATION CERTIFICATE

CERTIFICATE #	CE-EM-015 2023-05-10

CLIENT	
Company:	Services Polytests Inc
Address:	695 B rue Gaudette
	St-Jean-sur-Richelieu, Québec, J3B 7S7

CALIBRATION SPECIFICATION	
Service Procedure:	4IN9101
Required Accuracy:	+\- 2°C
Calibration Frequency:(days)	365

INSTRUMENT SPECIFICATION			
Instrument Type:	Recorder	Input Type:	Temp
Manufacturer:	Keithley	Output Type:	Digitale
Model #:	7700	Measurement Type:	Temperature
Serial #:	1213648	Range:	Divers
Location:	N/A	Version:	Machine: N.A.

CALIBRATORS SPECIFICATION			
Calibrator:	Fluke 744	Certification #:	2023003233
Serial #:	8180008	Certification Date:	2023-04-26
Certified by:	Alpha Controls	Next Certification:	2024-04-26
Comments:			

Copyright of this certificate belongs to Inst. St-Laurent Inc. and must be reproduced in full, unless a written permission of Inst. St-Laurent Inc.

Instrumentation Saint-Laurent inc.
Certified ISO 17025

90 rue de la montagne
St-Joseph du lac
(Québec), J0N 1N0
Phone: (450) 473-6108
Fax: (450) 473-0207
info@instrumentationsaintlaurent.com

CLAS NIC-CNRC CLAS 2010-02

CALIBRATION CERTIFICATE

CERTIFICATE #	CE-EM-015 2023-05-10

CALIBRATION RESULTS

Entry Source	Given Value	Actual Value	Deviation Error	After Calib Value	Accuracy	Uncertainty
Conformity	Comment					
-190.0 °C	-190.0 °C	-190.6 °C	-0.6 °C	-190.6 °C	+/- 2.0 °C	+/- 0.4 °C
Compliant	Input#1TypeK					
0.0 °C	0.0 °C	-0.3 °C	-0.3 °C	-0.3 °C	+/- 2.0 °C	+/- 0.3 °C
Compliant	Input#1TypeK					
750.0 °C	750.0 °C	749.7 °C	-0.3 °C	749.7 °C	+/- 2.0 °C	+/- 0.3 °C
Compliant	Input#1TypeK					
100.0 °C	100.0 °C	99.7 °C	-0.3 °C	99.7 °C	+/- 2.0 °C	+/- 0.3 °C
Compliant	Input#2 TypeK					
100.0 °C	100.0 °C	99.8 °C	-0.2 °C	99.8 °C	+/- 2.0 °C	+/- 0.3 °C
Compliant	Input#3 TypeK					
100.0 °C	100.0 °C	99.8 °C	-0.2 °C	99.8 °C	+/- 2.0 °C	+/- 0.3 °C
Compliant	Input#4 TypeK					
100.0 °C	100.0 °C	99.8 °C	-0.2 °C	99.8 °C	+/- 2.0 °C	+/- 0.3 °C
Compliant	Input#5TypeK					
100.0 °C	100.0 °C	99.9 °C	-0.1 °C	99.9 °C	+/- 2.0 °C	+/- 0.3 °C
Compliant	Input#6TypeK					
100.0 °C	100.0 °C	99.9 °C	-0.1 °C	99.9 °C	+/- 2.0 °C	+/- 0.3 °C
Compliant	Input#7TypeK					
5.000 V.DC.	5.000 V.DC.	4.999 V.DC.	-0.001 V.DC.	4.999 V.DC.	+/- 0.500 V.DC.	0.1 V.DC.
Compliant	Input#8. VDC					
100.0 °C	100.0 °C	99.9 °C	-0.1 °C	99.9 °C	+/- 2.0 °C	+/- 0.2 °C
Compliant	Input#9TypeJ					
100.0 °C	100.0 °C	99.9 °C	-0.1 °C	99.9 °C	+/- 2.0 °C	+/- 0.2 °C
Compliant	Input#10TypeJ					
100.0 °C	100.0 °C	99.8 °C	-0.2 °C	99.8 °C	+/- 2.0 °C	+/- 0.2 °C
Compliant	Input#11TypeJ					
100.0 °C	100.0 °C	99.8 °C	-0.2 °C	99.8 °C	+/- 2.0 °C	+/- 0.2 °C
Compliant	Input#12TypeJ					
100.0 °C	100.0 °C	99.9 °C	-0.01 °C	99.9 °C	+/- 2.0 °C	+/- 0.2 °C
Compliant	Input#13 TypeJ					
5.000 V.DC.	5.000 V.DC.	4.999 V.DC.	-0.001 V.DC.	4.999 V.DC.	+/- 0.500 V.DC.	0.1 V.DC.
Compliant	Input#14 VDC					
100.0 °C	100.0 °C	100.0 °C	0.0 °C	100.0 °C	+/- 2.0 °C	+/- 0.2 °C
Compliant	Input#15 TypeJ					
100.0 °C	100.0 °C	100.0 °C	0.0 °C	100.0 °C	+/- 2.0 °C	+/- 0.2 °C
Compliant	Input#16TypeJ					
100.0 °C	100.0 °C	100.0 °C	0.0 °C	100.0 °C	+/- 2.0 °C	+/- 0.2 °C
Compliant	Input#17TypeJ					
100.0 °C	100.0 °C	100.0 °C	0.0 °C	100.0 °C	+/- 2.0 °C	+/- 0.2 °C
Compliant	Input#18TypeJ					

Version 1

Copyright of this certificate belongs to Inst. St-Laurent Inc. and must be reproduced in full, unless a written permission of Inst. St-Laurent Inc.

Instrumentation Saint-Laurent inc.
Certified ISO 17025

CLAS 2310-02

80 rue de la montagne
St-Joseph du lac
(Québec), J0N 1M0
Phone: (450) 473-6103
Fax: (450) 473-5207
info@instrumentationsaintlaurent.com

CALIBRATION CERTIFICATE

CERTIFICATE #	CE-EM-015 2023-05-10

CALIBRATION RESULTS

Entry Source	Given Value	Actual Value	Deviation Error	After Calib Value	Accuracy	Uncertainty
Conformity	**Comment**					
5.000 V.DC.	5.000 V.DC.	4.999 V.DC.	-0.01 V.DC.	4.999 V.DC.	+\- 0.500 V.DC.	0.1 V.DC.
Compliant	Input#19 VDC					
100.0 °C	100.0 °C	100.1 °C	+0.1 °C	100.1 °C	+\- 2.0 °C	+/- 0.2 °C
Compliant	Input#20TypeJ					
12.000 mA	12.000 mA	12.000 mA	0.000 mA	12.000 mA	+\- 0.100 mA	1.00 mA
Compliant	Input#21 mA					
12.000 mA	12.000 mA	12.000 mA	0.000 mA	12.000 mA	+\- 0.100 mA	1.00 mA
Compliant	Input#22 mA					

Environmental Conditions:	Temperature: 21 °C	Humidity: 28 %RH
Comments:	Test avec EM-147	

CALIBRATION DATE/ISSUANCE OF CERTIFICATE	
Calibration Date:	2023-05-10
Next Calibration:	2024-05-10
Certificate Date:	2023-05-10

CALIBRATION CONFORMITY	Before	After
Compliant:	X	X
Non Compliant:		

- Instrumentation St. Laurent Inc. Certify that the above instrument, meets or exceeds the specifications established by the manufacturer. The company's quality system complies with the requirements of ISO 17025: 2017 and the standards used to perform the calibration is traceable to NRC and / or NIST.
- Reported uncertainties represent a 95 % of confidence level assuming a normal distribution k=2.
- The declaration of conformity does not include Instrumentation St-Laurent Inc. uncertainty measurement. Decision rule is based on binary statement for simple acceptance rule against ILAC G8 standard and test tolerance limits are based on customer specifications, unless otherwise specified.
- The results presented in this certificate relate only to objects subject to calibration.
- It is the customer's responsibility to ensure that calibrated equipment meets its intended use.
- The date format used in this certificate is: YYYY-MM-DD.

Assessment Service Calibration Laboratory (ASCL) of the National Research Council of Canada (NRC) has assessed and certified calibration laboratory's ability and traceability to the International System of Units (SI) or to standards acceptable according to ASCL. This calibration certificate is issued in accordance with the terms of ASCL certification and accreditation requirements of the Standards Council of Canada (SCC). SCC accreditation number: # 666. ASCL and SCC does not guarantee the accuracy of individual calibrations by accredited laboratories.

Marc Gingras - Technicien

May 17th 2023

Copyright of this certificate belongs to Inst. St-Laurent Inc. and must be reproduced in full, unless a written permission of Inst. St-Laurent Inc.

Calibration Certificate ID:
CA0232-030-053023-ACC-USL

METTLER TOLEDO

Mettler-Toledo Inc.
Service Division
1900 Polaris Parkway
Columbus, OH, 43240
1-800-METTLER

Accredited by the American Association for Laboratory Accreditation (A2LA)
CALIBRATION CERT #1788.01

ISO 17025 Accredited
ANSI/NCSL Z540-1 Accredited

Accuracy Calibration Certificate

Customer

Company:	Services Polylasta		
Address:	695-B Rue Gaudette		
City:	Saint-Jean-Sur-Richelieu	Contact:	Danick Power
Zip / Postal:	J3B 7S7		
State / Province:	Quebec		

Weighing Device

Manufacturer:	Ohaus	Instrument Type:	Weighing Instrument
Model:	AR2140	Asset Number:	EM-051
Serial No.:	M365832001009I	Terminal Model:	NA
Building:	N/A	Terminal Serial No.:	NA
Floor:	N/A	Terminal Asset No.:	NA
Room:	N/A		

Range	Max Capacity	Readability (d)
1	210 g	0.0001 g

Procedure

Calibration Guideline:	ASTM E898 - 20
METTLER TOLEDO Work Instruction:	30280953

This calibration certificate contains measurements for As Found and As Left calibrations.

The sensitivity/span of the weighing instrument was adjusted before As Left calibration with an external weight. As Left: 200g

	Temperature		Humidity	
As Found	Start: 25.0 °C	End: 25.0 °C	Start: 63.0 %	End: 63.0 %
As Left	Start: 25.0 °C	End: 25.5 °C	Start: 63.0 %	End: 63.0 %

Environmental conditions have been verified to ensure the accuracy of the calibration.

This certificate is issued in accordance with the conditions of accreditation granted by A2LA, which is based on ISO/IEC 17025. A2LA has assessed the measurement capability of the laboratory and its traceability to recognized national standards.

As Found Calibration Date:	30-05-2023	Authorized A2LA Signatory:	
As Left Calibration Date:	30-05-2023		
Issue Date:	30-05-2023		Vladimir Kruchkov
Requested Next Calibration Date:	31-05-2024		

© METTLER TOLEDO
This is an original document and may not be partially reproduced without the written permission of the issuing calibration laboratory.

Measurement Results

Repeatability

Test Load: 100 g

	As Found	As Left
1	100.0007 g	100.0000 g
2	100.0007 g	100.0000 g
3	100.0007 g	100.0000 g
4	100.0008 g	100.0000 g
5	100.0007 g	100.0000 g
6	100.0007 g	100.0000 g
7	100.0007 g	100.0000 g
8	100.0007 g	100.0001 g
9	100.0007 g	100.0000 g
10	100.0007 g	100.0000 g

Standard Deviation	0.00003 g	0.00003 g

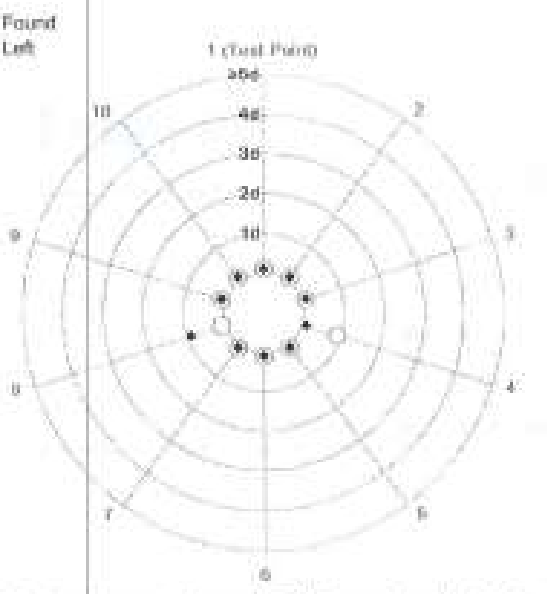

The "d" in the graph represents the readability of the range/interval in which the test was performed.

The results of this graph are based upon the absolute values of the differences from the mean value.

Eccentricity

Test Load: 100 g

Position	As Found	As Left
1	0.0000 g	0.0000 g
2	0.0000 g	0.0000 g
3	0.0000 g	0.0000 g
4	0.0000 g	0.0000 g
5	0.0000 g	0.0000 g

Maximum Deviation	0.0000 g	0.0000 g

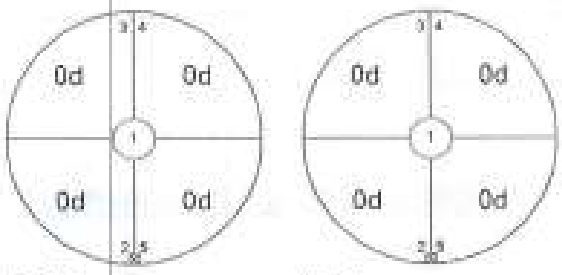

As Found

As Left

The "d" in the graph represents the readability of the range/interval in which the test was performed.

Error of Indication

As Found

	Reference Value	Indication	Error of Indication	Expanded Uncertainty	k
1	0.0000 g	0.0000 g	0.0000 g	0.09 mg	2
2	49.9999 g	50.0005 g	0.0006 g	0.25 mg	2
3	100.0000 g	100.0009 g	0.0009 g	0.44 mg	2
4	149.9999 g	150.0009 g	0.0010 g	0.66 mg	2
5	199.9999 g	200.0014 g	0.0015 g	0.83 mg	2

© METTLER TOLEDO
This is an original document and may not be partially reproduced without the written permission of the issuing calibration laboratory.

As Left

	Reference Value	Indication	Error of Indication	Expanded Uncertainty	k
1	0.0000 g	0.0000 g	0.0000 g	0.09 mg	2
2	49.9999 g	50.0000 g	0.0001 g	0.15 mg	2
3	100.0000 g	100.0000 g	0.0000 g	0.22 mg	2
4	149.9999 g	149.9999 g	0.0000 g	0.32 mg	2
5	199.9999 g	200.0000 g	0.0001 g	0.34 mg	2

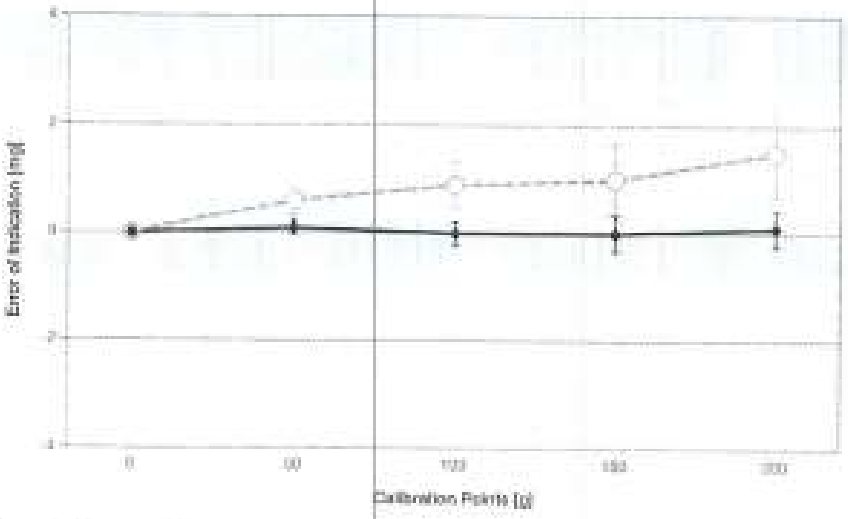

For improved legibility of the graphics only increasing measurement points are shown and measurement points close to zero are not displayed.

The uncertainty stated is the expanded uncertainty at calibration obtained by multiplying the standard combined uncertainty by the coverage factor k – which can be larger than 2 according to EURAMET cg-18. The value of the measurand lies within the assigned range of values with a probability of approximately 95%.

The user is responsible for maintaining environmental conditions and the settings of the weighing instrument when it was calibrated.

Test Equipment

All weights used for metrological testing are traceable to national or international standards. The weights were calibrated and certified by an accredited calibration laboratory.

Weight Set 1: OIML E2

Weight Set No.:	481	Date of Issue:	13-07-2022
Certificate Number:	220595315-1	Calibration Due Date:	31-07-2023

Remarks

Equipment condition: Fair

unit is ready for use

End of Accredited Section

The information below and any attachments to this calibration certificate are not part of the accredited calibration.

© METTLER TOLEDO
This is an original document and may not be partially reproduced without the written permission of the issuing calibration laboratory.

Measurement Uncertainty of the Weighing Instrument in Use

Stated is the expanded uncertainty with k=2 in use. The formula shall be used for the estimation of the uncertainty under consideration of the errors of indication. The value R represents the net load indication in the unit of measure of the device.

Temperature coefficient for the evaluation of the measurement uncertainty in use: $3.0 \cdot 10^{-6}$ / K

Temperature range on site for the evaluation of the measurement uncertainty in use: 4 K

Linearization of Uncertainty Equation

	Range		As Found	As Left
	d	Max		
1	0.0001 g	210 g	U_I = 0.10 mg + 0.0180 mg/g · R	U_I = 0.10 mg + 0.00811 mg/g · R

To optimize the stability of the linearization, besides of the zero load only increasing measurement points with a test load of 5% of the measurement range or larger are taken for the calculation of the linear equation.

Absolute and Relative Measurement Uncertainty in Use for Various Net Indications (Examples)

Net Indication	As Found		As Left	
0.021) g	0.10 mg	0.48%	0.10 mg	0.48%
0.210) g	0.10 mg	0.049%	0.10 mg	0.048%
2.100) g	0.14 mg	0.0056%	0.12 mg	0.0058%
21.0000 g	0.48 mg	0.0023%	0.27 mg	0.0013%
210.0030 g	3.9 mg	0.0018%	1.8 mg	0.00086%

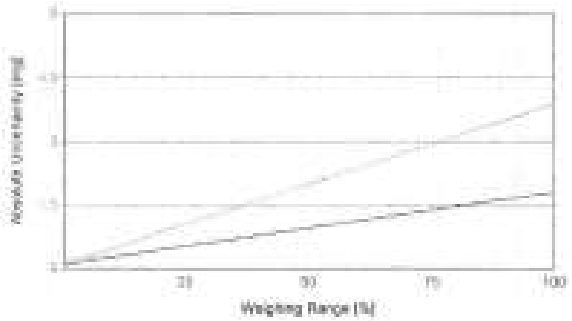

As Found

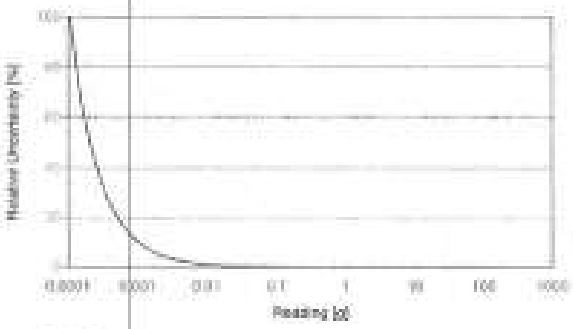

As Left

© METTLER TOLEDO
This is an original document and may not be partially reproduced without the written permission of the issuing calibration laboratory.

METTLER TOLEDO Service

Custom Tolerance Assessment

Assessment done without considering measurement uncertainty.
One or more of the measurements from the attached calibration certificate were assessed against customer-defined tolerances.

	As Found	As Left
Overall	✗	✓
Repeatability	✓	✓
Eccentricity	✓	✓
Error of Indication	✗	✓

Measurement Results

Repeatability

Test Load: 100 g

	As Found	As Left
1	100.0007 g	100.0000 g
2	100.0007 g	100.0000 g
3	100.0007 g	100.0000 g
4	100.0008 g	100.0000 g
5	100.0007 g	100.0000 g
6	100.0007 g	100.0000 g
7	100.0007 g	100.0000 g
8	100.0007 g	100.0001 g
9	100.0007 g	100.0000 g
10	100.0007 g	100.0000 g

Standard Deviation	0.00003 g	0.00003 g
Tolerance	0.00010 g ✓	0.00010 g ✓

© METTLER TOLEDO
This is an original document and may not be partially reproduced without the written permission of the issuing calibration laboratory.

Eccentricity

Test Load: 100 g

Position	As Found	As Left
1	0.0000 g	0.0000 g
2	0.0000 g	0.0000 g
3	0.0000 g	0.0000 g
4	0.0000 g	0.0000 g
5	0.0000 g	0.0000 g

Maximum Deviation	0.0000 g		0.0000 g	
Tolerance	0.0003 g	✓	0.0003 g	✓

Error of Indication

As Found

	Reference Value	Indication	Error of Indication	Tolerance	
1	0.0000 g	0.0000 g	0.0000 g	0.0001 g	✓
2	49.9999 g	50.0005 g	0.0006 g	0.0002 g	✗
3	100.0000 g	100.0009 g	0.0009 g	0.0004 g	✗
4	149.9999 g	150.0009 g	0.0010 g	0.0006 g	✗
5	199.9999 g	200.0014 g	0.0015 g	0.0004 g	✗

As Left

	Reference Value	Indication	Error of Indication	Tolerance	
1	0.0000 g	0.0000 g	0.0000 g	0.0001 g	✓
2	49.9999 g	50.0000 g	0.0001 g	0.0002 g	✓
3	100.0000 g	100.0000 g	0.0000 g	0.0004 g	✓
4	149.9999 g	149.9999 g	0.0000 g	0.0006 g	✓
5	199.9999 g	200.0000 g	0.0001 g	0.0004 g	✓

May 30th 2023

© METTLER TOLEDO
This is an original document and may not be partially reproduced without the written permission of the issuing calibration laboratory.

TRANSCAT

Trust in every measure

ACCREDITATION ISO 17025 SCC Scope Number 668

CALIBRATION CERTIFICATE

9900 Chemin de la Côte-de-Liesse, Montréal, QC H8T 1A1
www.dispersion.ca 1.866.390.5066

Client :	Polytests	**Certificate Number :**	**157-77C603-223**
Address :	695 B rue Gaudette Saint-Jean-sur-Richelieu, QC J3B7S7	**Calibration date :**	04-03-2022

Technician:
Coutu, Daniel

David Llorens, Quality Manager

SERVICE DESCRIPTION:

Masses description :	ASTM E617	**Date approved :**	04-03-2022
Precision class :	ASTM 6	**Next Calibration :**	04-03-2027
Density :	7.95g/cm³	**CCN accreditation # :**	668
Identification (if unique) :	EM-090	**CLAS Certification # :**	2010-01

Test conditions :	Temp °C:	21.05	kPa Pressure:	102.3	Humidity:	49.4

NOTES:

For weight calibration, we use the procedure "Comparaison individuelle" PDL-09-MG-001 and the procedure "Détermination des incertitudes" PDL-09-MG-002. This certificate cannot be copied without written approval from Dispersion Laboratory. The results presented in these pages relate only to objects subjected to calibration.n

REMARKS:

March 2022

TRANSCAT
Trust in every measure

ACCREDITATION ISO 17025
SCC Scope Number 666

CALIBRATION CERTIFICATE

9800 Chemin de la Côte-de-Liesse, Montréal, QC H8T 1A1
www.dispersion.ca 1.866.390.5065

Client :	Polytests	**Certificate Number :**	167-77C603-223
Address :	695 Brue Gaudette	**CCN Accreditation # :**	666
	Saint-Jean-sur-Richelieu, QC	**CLAS Certification # :**	2010-01
	J3B7S7	**Precision class :**	ASTM 6
		Calibration date :	04-03-2022
Mass :	2 kg	**Follow-up date :**	04-03-2027

CALIBRATION RESULTS, CONVENTIONAL MASS:

Nominal Mass	Serie #	Inventory #	Conventional mass	Conventional mass after adjustment	Tolerance ± (mg)	Uncertainties ± (mg)
2 kg		BM-060	2.0001384 kg		200 mg	2.0 mg

TRANSCAT

Trust in every measure

ACCREDITATION ISO 17025

SCC Scope Number 668

CALIBRATION CERTIFICATE

9800 Chemin de la Côte-de-Liesse, Montréal, QC H8T 1A1
www.dlsperation.ca 1.866.390.5065

Client :	Polytests	**Certificate Number :**	157-77C603-223
Address :	695 B rue Gaudette	**CCN Accreditation # :**	668
	Saint-Jean-sur-Richelieu, QC J3B7S7	**CLAS Certification # :**	2010-01
		Precision class :	ASTM 6
		Calibration date :	04-03-2022
Mass :	2 kg	**Follow-up date :**	04-03-2027

CALIBRATION RESULTS, CORRECTIONS:

Nominal Mass	Serial #	Inventory #	Conventional mass Corrections	Conventional mass Corrections after adjustment	Tolerance ± (mg)	Uncertainties ± (mg)
2 kg		EM-090	138.4 mg		200 mg	2.0 mg

CALIBRATION CERTIFICATE

9900 Chemin de la Côte-de-Liesse, Montréal, QC H8T 1A1
www.dispersion.ca 1.866.390.5066

BALANCES

The following balances are used for calibration purposes :

> 5 kg to 25 kg :	Mettler Toledo XP32003L, SNR 1123271214, max. 32100 g, d = 0.005 g
> 1 kg to 5 kg	Mettler Toledo PR5003, SNR 1115311634, max. 5100 g, d = 0.001 g
> 300 g to 2 kg :	Mettler Toledo XP2004S, SNR B131185222, max. 2100 g, d = 0.1 mg
> 100 g to 200 g :	Mettler Toledo AT201 SNR BA1115230146, max. 205 g, d = 0.01 mg
> 5 g to 100 g :	Mettler Toledo AX106 SNR 1127063924, max. 111 g, d = 1 µg
1 mg to 5 g :	Mettler UMX5, SNR 1121103055, max. 5.1 g, d = 0.1 µg

We are also using these balances in our automated procedure :

> 200 g to 1 kg :	Mettler Toledo AX1005 SNR 1127063210, max. 1109 g, d = 0.01 mg
> 5 g to 100 g :	Mettler Toledo AX106 SNR 1120143015, max. 111 g, d = 1 µg
1 mg to 5 g :	Mettler UMX5, SNR 1125140561, max. 5.1 g, d = 0.1 µg

Our balances are periodically verified, according to our PDL-11-MG-001 control procedure.

UNCERTAINTIES:

The following uncertainties exist :

1. *Uncertainty associated with the weighing process.*
2. *Uncertainty associated with air density.*
3. *Uncertainty associated with the measurement standard.*
4. *Uncertainty associated with the density of the mass being calibrated.*

The uncertainty of the weighing process includes long-term reproducibility.

Uncertainties specified in this report are expanded uncertainties representing a confidence level of approximately 95% obtained by multiplying the combined standard uncertainty by a coverage factor of k = 2. For more detailed information refer to the GUM (Guide to the Expression of Uncertainty in Measurement, 1995 Edition)

TRACEABILITY

The Calibration Laboratory Assessment Service (CLAS) of the National Research Council of Canada (NRC) has assessed and certified specific calibration capabilities of this laboratory and their traceability to recognized national measurement standards and to the International System of Units (SI). This certificate of calibration is issued in accordance with the conditions of certification granted by CLAS and the conditions of accreditation granted by the Standards Council of Canada (SCC). Neither the CLAS nor the SCC guarantees the accuracy of individual calibration by accredited laboratories.

TRANSCAT®

Trust in every measure

ACCREDITATION ISO 17025 SCC Scope Number 666

CALIBRATION CERTIFICATE

9800 Chemin de la Côte-de-Liesse, Montréal, QC H8T 1A1
www.dispersion.ca 1.866.390.5066

USED REFERENCES

Item	Serial #	Manufacturer	Calibration date	Due date
300g Labo	96-0888-50-2	Denver Instrument Company	01-10-2020	31-03-2022
1kg-1mg Labo	MT-01	Mettler Toledo	01-10-2020	31-03-2022
2kg Labo	96-0888-50-3	Denver Instrument Company	01-10-2020	31-03-2022
1kg Labo	96-088850-1	Denver Instrument Company	01-10-2020	31-03-2022
5kg Labo	129089	Mettler Toledo	01-10-2020	31-03-2022
10kg Labo	DI000G991	Dispersion	23-03-2021	31-03-2022
20kg Labo	69976	Mettler Toledo	06-10-2021	31-10-2022
1 mg-10kg	4000028011	Troemner	15-10-2021	31-10-2022
2kg Labo	129088	Mettler Toledo	01-10-2020	31-03-2022

ENVIRONMENTAL CONDITIONS

Item	Serial #	Manufacturer	Calibration date	Due date
THE004	107080	Control Company	04-03-2021	31-03-2022

ID Certificat de Calibration
520501-084-101023-ACC-USI

METTLER TOLEDO

Mettler-Toledo Inc.
Service Division
1900 Polaris Parkway
Columbus, OH 43240
1-800-METTLER

Accredited by the American Association for Laboratory Accreditation (A2LA)
CALIBRATION CERT #1902.01
ISO 17025 Registered
ANSI/NCSL Z540-1 Accredited

Certificat de Calibration de Précision

Accuracy Calibration Certificate

Client

Compagnie:	Services Polytest		
Adresse:	695-B Rue Gaudette		
Ville:	Saint-Jean-Sur-Richelieu	Contact:	Danick Power
Zip/Code Postal:	J3B 7S7		
État/Province:	Quebec		

Weighing Device

Manufacturer:	RICE LAKE	Type d'instrument:	Weighing Instrument
Modèle:	4X4HP-10K	# Outil:	EM-114 EM-137
No. Série:	C18395	Modèle Indicateur:	IQ1355
Building:	N/D	Terminal Serial No.:	104851
Floor:	N/D	Terminal Asset No.:	N/D
Room:	N/D		

Plage	Capacité Max	Unité (d)
1	400 kg	0.05 kg

Procedure

Instruction de Calibration:	ASTM E898 - 20
Instruction de travail METTLER TOLEDO:	30250953

This calibration certificate including procedures and uncertainty estimation also complies with EURAMET cg-18 v 4.0.

Ce certificat de calibration contient des mesures pour la calibration Tel que Trouvé. Aucune calibration Tel que Laissé n'a été effectuée puisque l'appareil n'a pas été modifié suite à la calibration Tel que Trouvé. Par conséquent, les résultats Tel que Laissé correspondent aux résultats Tel que Trouvé.

The calibration was agreed with the user below the maximum capacity of the balance.

	Température	
Tel que Trouvé	Start: 20.0 °C	End: 21.0 °C

Environmental conditions have been verified to ensure the accuracy of the calibration.

This certificate is issued in accordance with the conditions of accreditation granted by A2LA, which is based on ISO/IEC 17025. A2LA has assessed the measurement capability of the laboratory and its traceability to recognized national standards.

Date calibration Tel que Trouvé:	10-10-2023
Date calibration Tel que Laissé:	N/D
Date d'Émission:	10-10-2023
Requested Next Calibration Date:	31-10-2024

Authorized A2LA Signatory:

Stephane Poisson

2023-10-23

©METTLER TOLEDO
Le document a été formaté par voie électronique.

Résultats de Mesure

Répétabilité

Charge de Test: 70 kg

	Tel que Trouvé	Tel que Laissé
1	70.00 kg	N/D
2	70.00 kg	N/D
3	70.00 kg	N/D
4	70.00 kg	N/D
5	70.00 kg	N/D
6	70.00 kg	N/D

Écart Type	0.000 kg	N/D

○ Tel que Trouvé
◆ Tel que Laissé

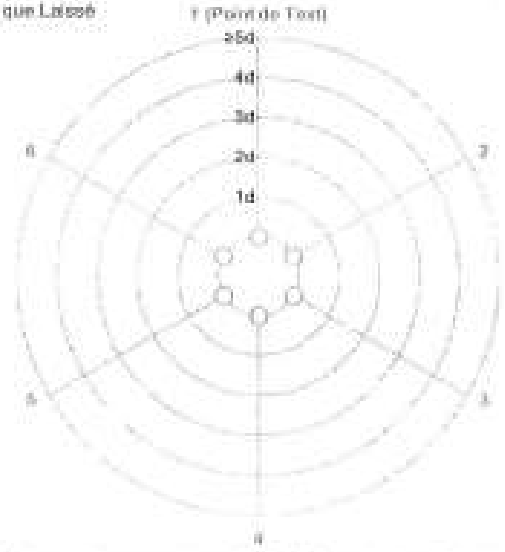

The "d" in the graph represents the readability of the range/interval in which the test was performed.

The results of this graph are based upon the absolute values of the differences from the mean value.

Excentricité

Charge de Test: 50 kg

Position	Tel que Trouvé	Tel que Laissé
1	50.00 kg	N/D
2	50.00 kg	N/D
3	50.00 kg	N/D
4	50.00 kg	N/D
5	50.00 kg	N/D

Déviation Maximale	0.00 kg	N/A

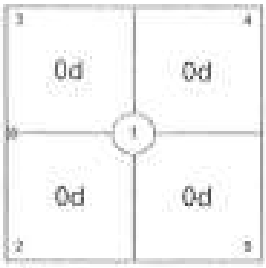

Tel que Trouvé

The "d" in the graph represents the readability of the range/interval in which the test was performed.

Erreur d'Indication

Tel que Trouvé

	Reference Value	Indication	Erreur d'Indication	Incertitude Élargie	k
1	0 kg	0.00 kg	0.00 kg	0.029 kg	2
2	30 kg	30.00 kg	0.00 kg	0.041 kg	2
3	70 kg	70.00 kg	0.00 kg	0.041 kg	2
4	100 kg	100.00 kg	0.00 kg	0.042 kg	2
5	150 kg	150.00 kg	0.00 kg	0.045 kg	2
6	0 kg	0.00 kg	0.00 kg	0.029 kg	2

© METTLER TOLEDO
Ce document a été fourni par voie électronique.

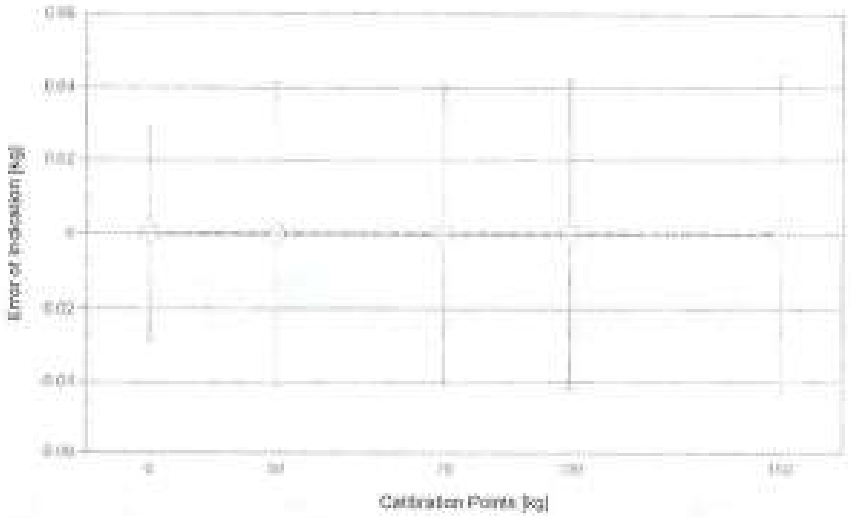

The uncertainty stated is the expanded uncertainty at calibration obtained by multiplying the standard combined uncertainty by the coverage factor k - which can be larger than 2 according to ASTM E898 and EURAMET cg-18. The value of the measurand lies within the assigned range of values with a probability of approximately 95%.

The user is responsible for maintaining environmental conditions and the settings of the weighing instrument when it was calibrated.
Les résultats présents dans ce certificat sont applicables uniquement aux équipements étalonnés.

Test Equipment

Tous les poids utilisés pour le contrôle métrologique sont rétraçables aux étalons Nationaux et Internationaux. Les poids ont été calibrés et certifiés par un laboratoire de calibration accrédité.

Jeu de Poids 1: OIML M1

Weight Set Number:	M	Date d'Emission:	15-05-2023
# Certificat:	1400958	Date de Calibration Due:	15-05-2024

Jeu de Poids 2: OIML M1

Weight Set Number:	BE10	Date d'Emission:	11-08-2023
# Certificat:	M23-0320	Date de Calibration Due:	11-08-2024

Remarques

N/O

End of Accredited Section

The information below and any attachments to this calibration certificate are not part of the accredited calibration.

Incertitude de Mesure du dispositif de pesage en opération

Stated is the expanded uncertainty with k=2 in use. The formula shall be used for the estimation of the uncertainty under consideration of the errors of indication. The value R represents the net load indication in the unit of measure of the device.

Coefficient de température pour l'évaluation de l'incertitude de mesure en opération: $10.0 \cdot 10^{-6}$ / K

Plage d'opération sur le site pour l'évaluation de l'incertitude de mesure en opération: 21 K

Linéarisation de l'Équation d'incertitude

	Plage		Tel que Trouvé	Tel que Laissé
	d	Max		
1	0.05 kg	150 kg	$U_1 = 41 g + 0.0858 g/kg \cdot R$	N/A

To optimize the stability of the linearization, besides of the zero load only increasing measurement points with a test load of 5% of the measurement range or larger are taken for the calculation of the linear equation.

Absolute and Relative Measurement Uncertainty in Use for Various Net Indications (Examples)

Indication Net	Tel que Trouvé		Tel que Laissé	
1.50 kg	0.041 kg	2.7%	N/A	N/A
15.00 kg	0.042 kg	0.28%	N/A	N/A
30.00 kg	0.044 kg	0.15%	N/A	N/A
75.00 kg	0.048 kg	0.064%	N/A	N/A
150.00 kg	0.055 kg	0.037%	N/A	N/A

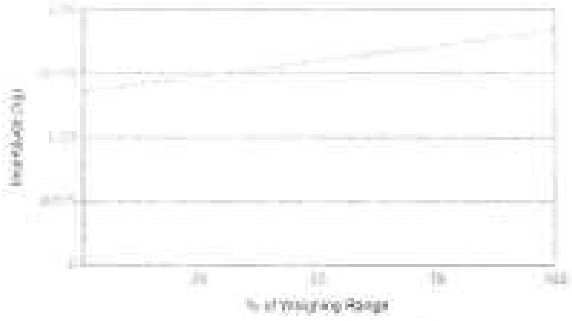

Tel que Trouvé

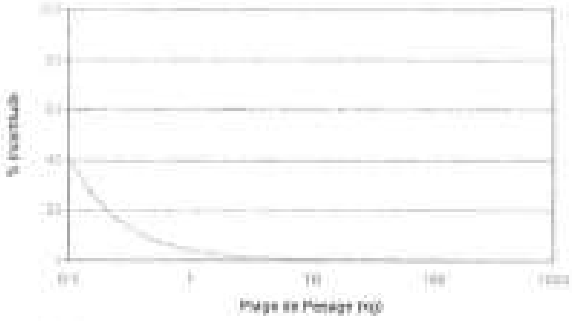

Tel que Laissé

Handbook 44 Tolerance Assessment (Entretien)

Assessment done without considering measurement uncertainty.
Les mesures du certificat de calibration joint ont été évaluées selon les tolérances définies par NIST HB44.

	Tel que Trouvé	Tel que Laissé
Global	✓	N/D

✓ = Passed
✗ = Failed

Weighing Device

Range	Max. Capacity	Readability (d)	Verification Scale Interval (e)	Class
1	400 kg	0.05 kg	0.05 kg	III



Tolerances according to NIST Handbook 44

Test Load		Tolérance
From	To	
0.00 kg	5.00 kg	0.0125 kg
5.05 kg	25.00 kg	0.05 kg
25.05 kg	100.00 kg	0.1 kg
100.05 kg	150.00 kg	0.15 kg

○ Tel que Trouvé
◆ Tel que Laissé
— Tolérance

Eccentricity and Repeatability

Test	Test Load	Tolérance	As Found		As Left	
			Max. Error / Range	Result	Max. Error / Range	Result
Excentricité (Maximum Error)	50 kg	0.10 kg	0.00 kg	✓	N/D	N/D
Excentricité (Plage)	50 kg	0.1 kg	0.00 kg	✓	N/D	N/D
Répétabilité (Maximum Error)	70 kg	0.1 kg	0.00 kg	✓	N/D	N/D
Répétabilité (Plage)	70 kg	0.10 kg	0.00 kg	✓	N/D	N/D

Max. Error: Maximum of the absolute values of the individual errors.
Range: Difference between largest and smallest measurement value.

Error of Indication

	Reference Value	Tolérance	As Found		As Left	
			Error of Indication	Result	Error of Indication	Result
1	0 kg	0.05 kg	0.00 kg	✓	N/D	N/D
2	30 kg	0.10 kg	0.00 kg	✓	N/D	N/D
3	70 kg	0.10 kg	0.00 kg	✓	N/D	N/D
4	100 kg	0.10 kg	0.00 kg	✓	N/D	N/D
5	150 kg	0.15 kg	0.00 kg	✓	N/D	N/D
6	0 kg	0.05 kg	0.00 kg	✓	N/D	N/D

© METTLER TOLEDO
Le document a été fourni par voie électronique.

Instrumentation Saint-Laurent Inc.
Certified ISO 17025

CLAS ARC-CNRC
CLAS 2010-02

80 rue de la montagne
St-Joseph du lac
(Québec), J0N 1M0
Phone: (450) 473-6169
Fax: (450) 473-5207
info@instrumentationsaintlaurent.com

CALIBRATION CERTIFICATE

CERTIFICATE #	CE-EM-126 2023-05-11

CLIENT	
Company:	Services Polytests Inc
Address:	695 B rue Gaudette
	St-Jean-sur-Richelieu, Québec, J3B 7S7

CALIBRATION SPECIFICATION	
Service Procedure:	4IN9106
Required Accuracy:	+\- 1"Hg
Calibration Frequency:(days)	365

INSTRUMENT SPECIFICATION			
Instrument Type:	Pressure Gauge	Input Type:	Pression
Manufacturer:	Dwyer	Output Type:	Digitale
Model #:	DPG200	Measurement Type:	Pressure
Serial #:	N.A.	Range:	0-28"Hg
Location:	N.A.	Version:	Machine: N.A.

CALIBRATORS SPECIFICATION			
Calibrator:	Crystal XP2i 300	Certification #:	2022006892
Serial #:	258139	Certification Date:	2022-09-09
Certified by:	Alpha Controls	Next Certification:	2023-09-09
Comments:			
Calibrator:	Fluke 744	Certification #:	2023003233
Serial #:	8180008	Certification Date:	2023-04-26
Certified by:	Alpha Controls	Next Certification:	2024-04-26
Comments:			

Copyright of this certificate belongs to Inst. St-Laurent Inc. and must be reproduced in full, unless a written permission of Inst. St-Laurent Inc.

Instrumentation Saint-Laurent inc.
Certified ISO 17025

CLAS
ARC-CARC
CLAS 2010-02

LAB
LAB
N°830

89 rue de la montagne
St-Joseph du lac
(Québec), J0N 1M0
Phone: (450) 473-6188
Fax: (450) 473-5207
info@instrumentationsaintlaurent.com

CALIBRATION CERTIFICATE

CERTIFICATE #	CE-EM-126 2023-05-11

CALIBRATION RESULTS

Entry Source	Given Value	Actual Value	Deviation Error	After Calib Value	Accuracy	Uncertainty
Conformity	Comment					
0.00 "Hg	0.00 "Hg	0.00 "Hg	0.00 "Hg	0.00 "Hg	+\- 1.0 "Hg	± 0.5 "Hg
Compliant	Verification of the indicator					
-7.50 "Hg	-7.50 "Hg	-7.61 "Hg	-0.11 "Hg	-7.61 "Hg	+\- 1.0 "Hg	± 0.5 "Hg
Compliant	Verification of the indicator					
-15.00 "Hg	-15.00 "Hg	-15.24 "Hg	-0.24 "Hg	-15.24 "Hg	+\- 1.0 "Hg	± 0.5 "Hg
Compliant	Verification of the indicator					
-22.50 "Hg	-22.50 "Hg	-22.87 "Hg	-0.13 "Hg	-22.87 "Hg	+\- 1.0 "Hg	± 0.5 "Hg
Compliant	Verification of the indicator					
-28.00 "Hg	-28.00 "Hg	-28.40 "Hg	-0.40 "Hg	-28.40 "Hg	+\- 1.0 "Hg	± 0.5 "Hg
Compliant	Verification of the indicator					
-22.50 "Hg	-22.50 "Hg	-22.87 "Hg	0.00 "Hg	-22.87 "Hg	+\- 1.0 "Hg	± 0.5 "Hg
Compliant	Verification of the indicator					
-15.00 "Hg	-15.00 "Hg	-15.24 "Hg	-0.24 "Hg	-15.24 "Hg	+\- 1.0 "Hg	± 0.5 "Hg
Compliant	Verification of the indicator					
-7.50 "Hg	-7.50 "Hg	-7.61 "Hg	-0.11 "Hg	-7.61 "Hg	+\- 1.0 "Hg	± 0.5 "Hg
Compliant	Verification of the indicator					
-7.50 "Hg	-7.50 "Hg	-7.61 "Hg	-0.11 "Hg	-7.61 "Hg	+\- 1.0 "Hg	± 0.5 "Hg
Compliant	Verification of the indicator					
0.00 "Hg	10.0000 V.DC.	10.0454 V.DC.	+0.0454 V.DC.	10.0778 V.DC.	+\- 0.5 V.DC.	0.5 V.DC.
Compliant	Verification of the analogic output					
-7.50 "Hg	8.0000 V.DC.	8.0336 V.DC.	+0.0336 V.DC.	8.0447 V.DC.	+\- 0.5 V.DC.	0.5 V.DC.
Compliant	Verification of the analogic output					
-15.00 "Hg	6.0000 V.DC.	6.0028 V.DC.	+0.0028 V.DC.	6.0069 V.DC.	+\- 0.5 V.DC.	0.5 V.DC.
Compliant	Verification of the analogic output					
-22.50 "Hg	4.0000 V.DC.	3.9675 V.DC.	-0.0325 V.DC.	3.9596 V.DC.	+\- 0.5 V.DC.	0.5 V.DC.
Compliant	Verification of the analogic output					
-28.00 "Hg	2.5333 V.DC.	2.5445 V.DC.	+00112 V.DC.	2.4444 V.DC.	+\- 0.5 V.DC.	0.5 V.DC.
Compliant	Verification of the analogic output					
-22.50 "Hg	4.0000 V.DC.	3.9678 V.DC.	-0.0322 V.DC.	3.9678 V.DC.	+\- 0.5 V.DC.	0.5 V.DC.
Compliant	Verification of the analogic output					
-22.50 "Hg	4.0000 V.DC.	3.9678 V.DC.	-0.0322 V.DC.	3.9678 V.DC.	+\- 0.5 V.DC.	0.5 V.DC.
Compliant	Verification of the analogic output					
-22.50 "Hg	4.0000 V.DC.	3.9678 V.DC.	-0.0322 V.DC.	3.9678 V.DC.	+\- 0.5 V.DC.	0.5 V.DC.
Compliant	Verification of the analogic output					
-22.50 "Hg	4.0000 V.DC.	3.9678 V.DC.	-0.0322 V.DC.	3.9678 V.DC.	+\- 0.5 V.DC.	0.5 V.DC.
Compliant	Verification of the analogic output					

Environmental Conditions: Temperature: 21 °C Humidity: 30 %RH

Comments:

Version 1

Copyright of this certificate belongs to Inst. St-Laurent Inc. and must be reproduced in full, unless a written permission of Inst. St-Laurent Inc.

Instrumentation Saint-Laurent inc.
Certified ISO 17025

CLAS 2010-02

80 rue de la montagne
St-Joseph du lac
(Québec), J0N 1M0
Phone: (450) 472-6180
Fax: (450) 472-5207
info@instrumentationsaintlaurent.com

CALIBRATION CERTIFICATE

CERTIFICATE #	CE-EM-126 2023-05-11

CALIBRATION DATE/ISSUANCE OF CERTIFICATE	
Calibration Date:	2023-05-11
Next Calibration:	2024-05-11
Certificate Date:	2023-05-11

CALIBRATION CONFORMITY		
	Before	After
Compliant:	X	X
Non Compliant:		

- Instrumentation St. Laurent Inc. Certify that the above instrument, meets or exceeds the specifications established by the manufacturer. The company's quality system complies with the requirements of ISO 17025: 2017 and the standards used to perform the calibration is traceable to NRC and / or NIST.
- Reported uncertainties represent a 95 % of confidence level assuming a normal distribution k=2.
- The declaration of conformity does not include Instrumentation St-Laurent Inc. uncertainty measurement. Decision rule is based on binary statement for simple acceptance rule against ILAC G8 standard and test tolerance limits are based on customer specifications, unless otherwise specified.
- The results presented in this certificate relate only to objects subject to calibration.
- It is the customer's responsibility to ensure that calibrated equipment meets its intended use.
- The date format used in this certificate is: YYYY-MM-DD.

Assessment Service Calibration Laboratory (ASCL) of the National Research Council of Canada (NRC) has assessed and certified calibration laboratory's ability and traceability to the International System of Units (SI) or to standards acceptable according to ASCL. This calibration certificate is issued in accordance with the terms of ASCL certification and accreditation requirements of the Standards Council of Canada (SCC). SCC accreditation number: # 669. ASCL and SCC does not guarantee the accuracy of individual calibrations by accredited laboratories.

Marc Gingras - Technician

May 17th 2023

5F03106 Version 1

Copyright of this certificate belongs to Inst. St-Laurent Inc. and must be reproduced in full, unless a written permission of Inst. St-Laurent Inc.

Instrumentation Saint-Laurent Inc.
Certified ISO 17025

CLAS NRC-CNRC
CLAS 2013-02

89 rue de la montagne
St-Joseph du lac
(Québec), J0N 1M0
Phone: (450) 473-6103
Fax: (450) 473-6207
info@instrumentationsaintlaurent.com

CALIBRATION CERTIFICATE

CERTIFICATE #	CE-EM-127 2023-05-11

CLIENT	
Company:	Services Polytests Inc
Address:	695 B rue Gaudette
	St-Jean-sur-Richelieu, Québec, J3B 7S7

CALIBRATION SPECIFICATION	
Service Procedure:	4IN9106
Required Accuracy:	+\- 1"Hg
Calibration Frequency:(days)	365

INSTRUMENT SPECIFICATION			
Instrument Type:	Pressure Gauge	Input Type:	Pression
Manufacturer:	Dwyer	Output Type:	Digitale
Model #:	DPG200	Measurement Type:	Pressure
Serial #:	N.A.	Range:	0-28"Hg
Location:	N.A.	Version:	Machine: N.A.

CALIBRATORS SPECIFICATION			
Calibrator:	Crystal XP2i 300	Certification #:	2022006892
Serial #:	258139	Certification Date:	2022-09-09
Certified by:	Alpha Controls	Next Certification:	2023-09-09
Comments:			
Calibrator:	Fluke 744	Certification #:	2023003233
Serial #:	6180008	Certification Date:	2023-04-26
Certified by:	Alpha Controls	Next Certification:	2024-04-26
Comments:			

Copyright of this certificate belongs to Inst. St-Laurent Inc. and must be reproduced in full, unless a written permission of Inst. St-Laurent Inc.

Instrumentation Saint-Laurent Inc.
Certified ISO 17025

CLAS NRC-CNRC CLAS 2010-02

89 rue de la montagne
St-Joseph-du-lac
(Québec), J0N 1M0
Phone: (450) 473-6188
Fax: (450) 473-5207
info@instrumentationsaintlaurent.com

CALIBRATION CERTIFICATE

CERTIFICATE #	CE-EM-127 2023-05-11

CALIBRATION RESULTS

Entry Source	Given Value	Actual Value	Deviation Error	After Calib Value	Accuracy	Uncertainty
Conformity	Comment					
0.00 "Hg	0.00 "Hg	0.00 "Hg	0.00 "Hg	0.00 "Hg	+/-1.0 "Hg	± 0.5 "Hg
Compliant	Verification of the indicator					
-7.50 "Hg	-7.50 "Hg	-7.50 "Hg	0.00 "Hg	-7.50 "Hg	+/- 1.0 "Hg	± 0.5 "Hg
Compliant	Verification of the indicator					
-15.00 "Hg	-15.00 "Hg	-15.00 "Hg	0.00 "Hg	-15.00 "Hg	+/- 1.0 "Hg	± 0.5 "Hg
Compliant	Verification of the indicator					
-22.50 "Hg	-22.50 "Hg	-22.53 "Hg	-0.03 "Hg	-22.53 "Hg	+/- 1.0 "Hg	± 0.5 "Hg
Compliant	Verification of the indicator					
-28.00 "Hg	-28.00 "Hg	-28.04 "Hg	-0.04 "Hg	-28.04 "Hg	+/- 1.0 "Hg	± 0.5 "Hg
Compliant	Verification of the indicator					
-22.50 "Hg	-22.50 "Hg	-22.53 "Hg	-0.03 "Hg	-22.53 "Hg	+/- 1.0 "Hg	± 0.5 "Hg
Compliant	Verification of the indicator					
-15.00 "Hg	-15.00 "Hg	-15.00 "Hg	0.00 "Hg	-15.00 "Hg	+/- 1.0 "Hg	± 0.5 "Hg
Compliant	Verification of the indicator					
-7.50 "Hg	-7.50 "Hg	-7.50 "Hg	0.00 "Hg	-7.50 "Hg	+/- 1.0 "Hg	± 0.5 "Hg
Compliant	Verification of the indicator					
0.00 "Hg	0.00 "Hg	0.00 "Hg	0.00 "Hg	0.00 "Hg	+/- 1.0 "Hg	± 0.5 "Hg
Compliant	Verification of the indicator					
0.00 "Hg	10.0000 V.DC.	10.066 V.DC.	+0.0066 V.DC.	10.0066 V.DC.	+/- 0.5 V.DC.	0.5 V.DC.
Compliant	Verification of the analogic output					
-7.50 "Hg	8.0000 V.DC.	8.0210 V.DC.	+0.0210 V.DC.	8.0210 V.DC.	+/- 0.5 V.DC.	0.5 V.DC.
Compliant	Verification of the analogic output					
-15.00 "Hg	6.0000 V.DC.	6.0141 V.DC.	+0.0141 V.DC.	6.0141 V.DC.	+/- 0.5 V.DC.	0.5 V.DC.
Compliant	Verification of the analogic output					
-22.50 "Hg	4.0000 V.DC.	4.0133 V.DC.	+0.0133 V.DC.	4.0133 V.DC.	+/- 0.5 V.DC.	0.5 V.DC.
Compliant	Verification of the analogic output					
-28.00 "Hg	2.5333 V.DC.	2.5256 V.DC.	-0.0173 V.DC.	2.5160 V.DC.	+/- 0.5 V.DC.	0.5 V.DC.
Compliant	Verification of the analogic output					
-22.50 "Hg	-22.50 V.DC.	4.0136 V.DC.	+0.136 V.DC.	4.0136 V.DC.	+/- 0.5 V.DC.	0.5 V.DC.
Compliant	Verification of the analogic output					
-15.00 "Hg	-15.00 V.DC.	6.0144 V.DC.	+0.0144 V.DC.	6.0144 V.DC.	+/- 0.5 V.DC.	0.5 V.DC.
Compliant	Verification of the analogic output					
-7.50 "Hg	-7.50 V.DC.	8.0208 V.DC.	+0.208 V.DC.	8.0208 V.DC.	+/- 0.5 V.DC.	0.5 V.DC.
Compliant	Verification of the analogic output					
0.00 "Hg	0.00 V.DC.	10.068 V.DC.	+0.68 V.DC.	10.068 V.DC.	+/- 0.5 V.DC.	0.5 V.DC.
Compliant	Verification of the analogic output					

Environmental Conditions: Temperature: 21 °C Humidity: 30 %RH

Comments:

Version 1

Copyright of this certificate belongs to Inst. St-Laurent Inc. and must be reproduced in full, unless a written permission of Inst. St-Laurent Inc.

Instrumentation Saint•Laurent Inc.
Certified ISO 17025

CLAS NRC·CNRC
CLAS 2010-02

SCC Accredited LAB
LAB
N 1000

80 rue de la montagne
St-Joseph du lac
(Québec), J0N 1M0
Phone: (450) 473-6160
Fax: (450) 473-5207
info@instrumentationsaintlaurent.com

CALIBRATION CERTIFICATE

CERTIFICATE #	CE-EM-127 2023-05-11

CALIBRATION DATE/ISSUANCE OF CERTIFICATE	
Calibration Date:	2023-05-11
Next Calibration:	2024-05-11
Certificate Date:	2023-05-11

CALIBRATION CONFORMITY	Before	After
Compliant:	X	X
Non Compliant:		

- Instrumentation St. Laurent Inc. Certify that the above instrument, meets or exceeds the specifications established by the manufacturer. The company's quality system complies with the requirements of ISO 17025 :2017 and the standards used to perform the calibration is traceable to NRC and / or NIST.
- Reported uncertainties represent a 95 % of confidence level assuming a normal distribution k=2.
- The declaration of conformity does not include Instrumentation St-Laurent Inc. uncertainty measurement. Decision rule is based on binary statement for simple acceptance rule against ILAC G8 standard and test tolerance limits are based on customer specifications, unless otherwise specified.
- The results presented in this certificate relate only to objects subject to calibration.
- It is the customer's responsibility to ensure that calibrated equipment meets its intended use.
- The date format used in this certificate is: YYYY-MM-DD.

Assessment Service Calibration Laboratory (ASCL) of the National Research Council of Canada (NRC) has assessed and certified calibration laboratory's ability and traceability to the International System of Units (SI) or to standards acceptable according to ASCL. This calibration certificate is issued in accordance with the terms of ASCL certification and accreditation requirements of the Standards Council of Canada (SCC); SCC accreditation number: # 669. ASCL and SCC does not guarantee the accuracy of individual calibrations by accredited laboratories.

Marc Gingras - Technician

May 17th 2023

5F09106 Version 1

Copyright of this certificate belongs to Inst. St-Laurent Inc. and must be reproduced in full, unless a written permission of Inst. St-Laurent Inc.

TRANSCAT
Trust in every measure

ACCREDITATION ISO 17025
SCC Scope Number 668

CALIBRATION CERTIFICATE

9900 Chemin de la Côte-de-Liesse, Montréal, QC H8T 1A1
www.dispersion.ca 1.866.390.5066

Client :	Polytests	**Certificate Number :**	**157-77C603-221**
Address :	695 B rue Gaudette Saint-Jean-sur-Richelieu, QC J3B7S7	**Calibration date :**	04-03-2022

Technician:
Coutu, Daniel

David Llorens, Quality Manager

SERVICE DESCRIPTION:

Masses description :	ASTM E617	**Date approved :**	04-03-2022
Precision class :	ASTM 1	**Next Calibration :**	04-03-2027
Density :	7.95g/cm³	**CCN accreditation # :**	668
Identification (if unique) :	1000026013	**CLAS Certification # :**	2010-01

Test conditions :	Temp °C:	21.05	kPa Pressure:	102.3	Humidity:	49.4

NOTES:

For weight calibration, we use the procedure "Comparaison individuelle" PDL-09-MG-001 and the procedure "Détermination des incertitudes" PDL-09-MG-002. This certificate cannot be copied without written approval from Dispersion Laboratory. The results presented in these pagas relate only to objects subjected to calibration.n

REMARKS:

March 2022

TRANSCAT
Trust in every measure

ACCREDITATION ISO 17025
SCC Scope Number 666

CALIBRATION CERTIFICATE

9960 Chemin de la Côte-de-Liesse, Montréal, QC H8T 1A1
www.diapason.ca 1.866.390.5066

Client :	Polytests	**Certificate Number :**	157-77C603-221
Address :	695 E rue Gaudette	**CCN Accreditation # :**	666
	Saint-Jean-sur-Richelieu, QC	**CLAS Certification # :**	2010-01
	J3B7S7	**Precision class :**	ASTM 1
		Calibration date :	04-03-2022
Mass :	200 g	**Follow-up date :**	04-03-2027

CALIBRATION RESULTS, CONVENTIONAL MASS:

Nominal Mass	Serial #	Inventory #	Conventional mass	Conventional mass after adjustment	Tolerance ± (mg)	Uncertainties ± (mg)
200 g*	1000025013	EM-129	199.99954 g	199.99998 g	0.50 mg	0.10 mg

*Applicable only for adjusted masses **Falls outside of the specified class

TRANSCAT

Trust in every measure

ACCREDITATION ISO 17025

SCC Scope Number 668

CALIBRATION CERTIFICATE

9900 Chemin de la Côte-de-Liesse, Montréal, QC H8T 1A1
www.dispersion.ca 1.866.990.5068

Client :	Polylesta	**Certificate Number :**	157-77C693-221
Address :	695 B rue Gaudette	**CCN Accreditation # :**	668
	Saint-Jean-sur-Richelieu, QC	**CLAS Certification # :**	2010-01
	J3B7S7	**Precision class :**	ASTM 1
		Calibration date :	04-03-2022
Mass :	200 g	**Follow-up date :**	04-03-2027

CALIBRATION RESULTS, CORRECTIONS:

Nominal Mass	Serial #	Inventory #	Conventional mass Corrections	Conventional mass Corrections after adjustment	Tolerance ± (mg)	Uncertainties ± (mg)
200 g*	1000026013	EM-129	-0.46 mg	-0.14 mg	0.50 mg	0.10 mg

*Applicable only for adjusted masses **Falls outside of the specified class

CALIBRATION CERTIFICATE

9800 Chemin de la Côte-de-Liesse, Montréal, QC H8T 1A1
www.dispersion.ca 1.888.395.5066

BALANCES

The following balances are used for calibration purposes ;

> 5 kg to 25 kg :	Mettler Toledo XP32003L, SNR 1123271214, max. 32100 g, d = 0.005 g
> 1 kg to 5 kg	Mettler Toledo PR5003, SNR 1115311634, max. 5100 g, d = 0.001 g
> 300 g to 2 kg :	Mettler Toledo XP2004S, SNR B131165222, max. 2100 g, d = 0.1 mg
> 100 g to 200 g :	Mettler Toledo AT201 SNR BA1115230146, max. 205 g, d = 0.01 mg
> 5 g to 100 g :	Mettler Toledo AX106 SNR 1127063924, max. 111 g, d = 1 µg
1 mg to 5 g :	Mettler UMX5, SNR 1121103055, max. 5.1 g, d = 0.1 µg

We are also using these balances in our automated procedure :

> 200 g to 1 kg :	Mettler Toledo AX1005 SNR 1127063210, max. 1109 g, d = 0.01 mg
> 5 g to 100 g :	Mettler Toledo AX106 SNR 1120143015, max. 111 g, d = 1 µg
1 mg to 5 g :	Mettler UMX5, SNR 1125140561, max. 5.1 g, d = 0.1 µg

Our balances are periodically verified, according to our PDL-11-MG-001 control procedure.

UNCERTAINTIES:

The following uncertainties exist :

1. *Uncertainty associated with the weighing process.*
2. *Uncertainty associated with air density.*
3. *Uncertainty associated with the measurement standard.*
4. *Uncertainty associated with the density of the mass being calibrated.*

The uncertainty of the weighing process includes long-term reproducibility.

Uncertainties specified in this report are expanded uncertainties representing a confidence level of approximately 95% obtained by multiplying the combined standard uncertainty by a coverage factor of k = 2. For more detailed information refer to the GUM (Guide to the Expression of Uncertainty in Measurement, 1995 Edition)

TRACEABILITY

The Calibration Laboratory Assessment Service (CLAS) of the National Research Council of Canada (NRC) has assessed and certified specific calibration capabilities of this laboratory and their traceability to recognized national measurement standards and to the International System of Units (SI). This certificate of calibration is issued in accordance with the conditions of certification granted by CLAS and the conditions of accreditation granted by the Standards Council of Canada (SCC). Neither the CLAS nor the SCC guarantees the accuracy of individual calibration by accredited laboratories.

TRANSCAT
Trust in every measure

ACCREDITATION ISO 17025
SCC Scope Number 668

CALIBRATION CERTIFICATE

9800 Chemin de la Côte-de-Liesse, Montréal, QC H8T 1A1
www.dispersion.ca 1.866.390.5068

USED REFERENCES

Item	Serial #	Manufacturer	Calibration date	Due date
300g Labo	96-0888-50-2	Denver Instrument Company	01-10-2020	31-03-2022
1kg-1mg Labo	MT-01	Mettler Toledo	01-10-2020	31-03-2022
2kg Labo	96-0888-50-3	Denver Instrument Company	01-10-2020	31-03-2022
1kg Labo	96-088850-1	Denver Instrument Company	01-10-2020	31-03-2022
5kg Labo	129099	Mettler Toledo	01-10-2020	31-03-2022
10kg Labo	DI000G991	Dispersion	23-03-2021	31-03-2022
20kg Labo	69976	Mettler Toledo	06-10-2021	31-10-2022
1 mg-10kg	4000029011	Troemner	15-10-2021	31-10-2022
2kg Labo	129098	Mettler Toledo	01-10-2020	31-03-2022

ENVIRONMENTAL CONDITIONS

Item	Serial #	Manufacturer	Calibration date	Due date
THE004	107080	Control Company	04-03-2021	31-03-2022

POLYCONTROLS

CLAS 2069-02

CALIBRATION CERTIFICATE # 19905

Calibration date : 2023-06-28
Certificate issued : 2023-06-28

Services Polytests
695 B Gaudette street
St-Jean-sur-Richelieu, Québec, Canada
J3B 7S7

Calibration of
Positive displacement flow meter American Meter Company DTM-200A S/N : 99A274209

QUALITY PROGRAM CONFORMANCE

All calibrations are performed in accordance with Polycontrols Laboratory Quality Assurance Manual and conform to ISO/IEC 17025: 2017, ISO 9001 – 2015 and/or other quality requirements defined in customers purchase descriptions. The results are strictly valid for the device under test or calibration. If applicable, the decision rule is described in the certificate.

TRACEABILITY

The traceability for flow standard to the National Institute of Standards and Technology, NIST, is maintained by Fluke Corporation of Phoenix, Arizona and conform to ISO/IEC 17025, ANSI/NCSL Z540-1-1994, ISO-10012-1 and MIL-STD 45662A.

The Calibration Laboratory Assessment Service (CLAS) of the National Research Council of Canada (NRC) has assessed and certified specific calibration capabilities of this laboratory and traceability to the International System of Units (SI) or to standards acceptable to the CLAS program. This certificate of calibration is issued in accordance with the conditions of certification granted by CLAS and the conditions of accreditation granted by the Standards Council of Canada (SCC). Neither CLAS nor SCC guarantee the accuracy of individual calibrations by accredited laboratories.

CALIBRATION OF MEASURING AND TEST EQUIPMENT

For calibration measurement capability, please refer to the Canadian Calibration Network web page at the National Research Council of Canada. This laboratory is accredited by the Standards Council of Canada as part of the Calibration Laboratory Assessment Service (CLAS) program and is listed at nrc.canada.ca.

This document forms part of the Certificate of Accreditation issued by the Standards Council of Canada (SCC). The original version is available in the Directory of Accredited Laboratories on the SCC website at www.scc.ca.

CONDITION SUMMARY OF THE DEVICE UNDER TEST

Initial conditions	In good condition
Work done	Calibration of the instrument Initial readings = Final readings, no adjustment
Results	Final readings in tolerance
Remarks	Calibration frequency every 6 months

B Poirier

Bernard Poirier
Metrologist

Laboratory Manager

©2023 Polycontrols • This calibration document shall not be reproduced except in full, without written approval of Polycontrols inc.
3650, Matte blvd. Unit A-11, Brossard (Quebec), Canada, J4Y 2Z2
Tél: (450) 444-3600 Fax: (450) 444-1088 www.polycontrols.com

POLYCONTROLS

CLAS 2019-02

Calibration certificate # 19905

Serial Number:	99A274209	Test stand:	3
Calibration Date:	2023-06-28	Procedure:	POS-CAL-005
Instrument ID:	EM-130	Decision rule:	Method #3

Standard equipment used for final calibration

Description	Model	Serial #	Traceability	Due date
Fluke molbloc_100 slpm	2G2-S	380	1500341894	2023-10-19
Fluke molbloc_30 slpm	3E4-VCR-V-Q	2359	1500349861	2024-03-02
Fluke molbox1	Molbox1	881	1500341962	2023-10-18
RTD Mist	M22	2208101	2023003750	2024-05-17
Module 44.5 PSI avec fluro 103071	Module 30	160659	2023003753	2024-05-18

Final specifications of the device under test		Calibration conditions	
Gas	Air	Gas	Air
Operation temperature	20 °C	Ambient temperature	22 °C
Inlet pressure		Ambient pressure	1004.17 mbar
Outlet pressure		Orientation	Vertical
Reference temperature		Seals	Viton
Reference pressure		Valve	Viton
Range	0-200 ACFH		
Input/Output Signals	-		
Supply			
Accuracy ±2 %O.R.			

Final readings

Test Flow ACFH	Device under test ft³	Measured values Pressure PSIA	Temperature °C	Reference ft³	Calculated Reference ft³	Calculated Error ft³	Acceptable Error ft³	Uncertainty k = 2 ft³	TUR
40.4606	6.750	14.580	21.79	6.666	6.735	0.015	0.135	0.023	>4
119.5459	19.980	14.650	21.87	19.792	19.905	0.075	0.398	0.049	>4
197.6038	32.950	14.784	21.92	33.009	32.904	0.046	0.658	0.081	>4

POLYCONTROLS

CLAS 2009-02

Calibration certificate # 19905

Serial Number:	99A274209	Test stand:	3
Calibration Date:	2023-06-28	Procedure:	POS-CAL-005
Instrument ID:	EM-130	Decision rule:	Method #3

Final results

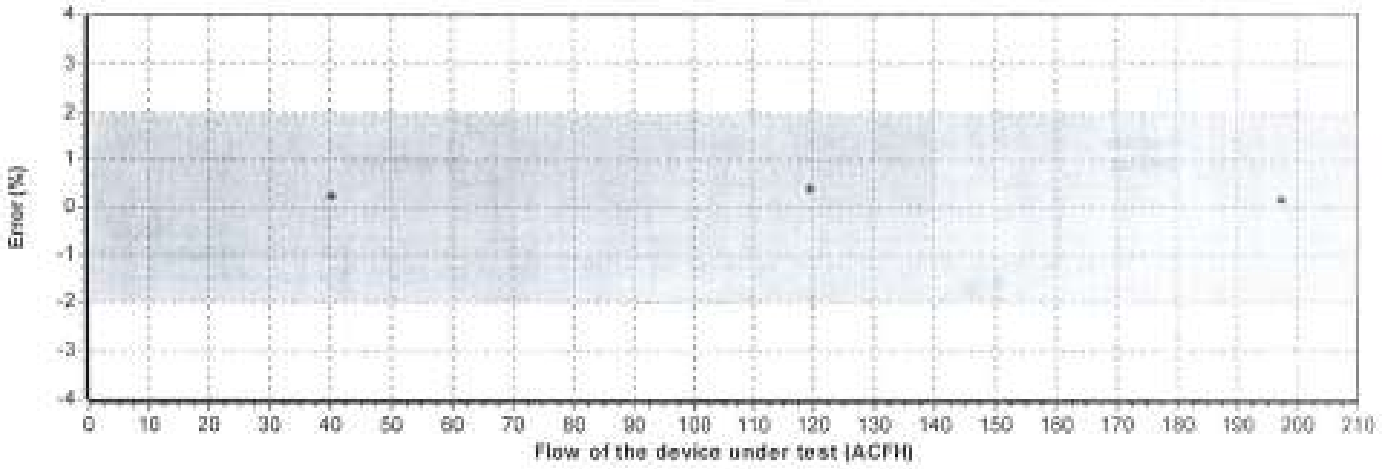

See the appendix for the guideline of decision rule

cal fact. 0.9977

August 1st 2023

Appendix for the decision rule

Method #2 Non-binary Statement with Guard Band, uncertainty directly taken into account

This decision rule uses a guard band to define the acceptance and rejection interval. The acceptance limit is defined by the following mathematical formula AL = TL – w and the rejection limit RL = TL + w, where w = rU. The multiple r that is multiplied by the expanded measurement uncertainty U can be defined following ILAC G8: 2019 table 1 section 5.2. The expanded measurement uncertainty U has a 95% coverage probability (k = 2). Non-binary statement with guard band exists when the result is limited to four choices: pass, conditional pass, conditional fail, and fail.

Statements of conformity are reported as:

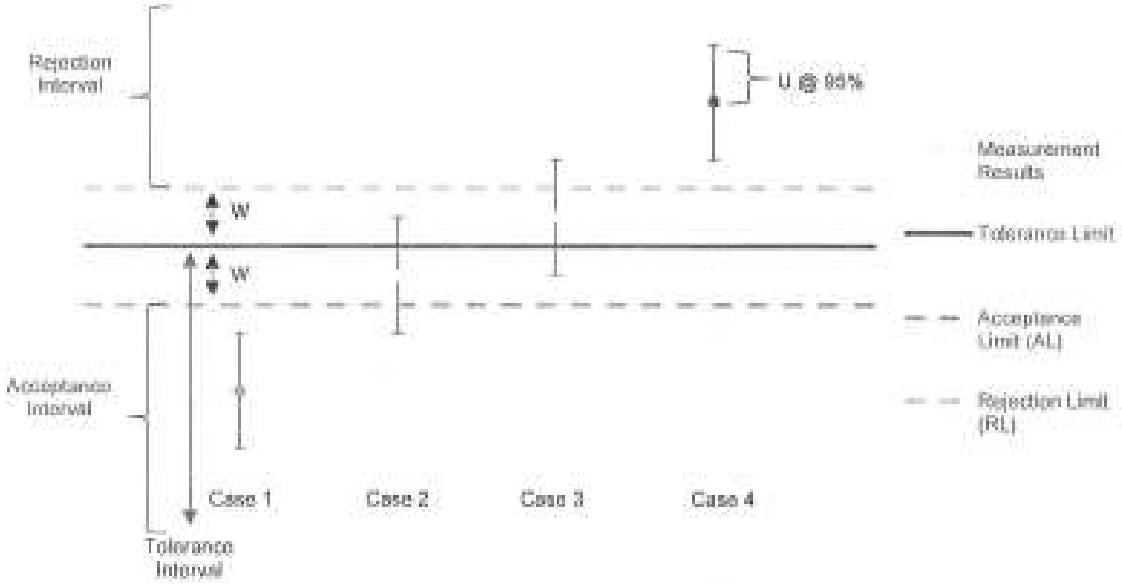

Graphical representation of a Non-Binary Statement with a Guard Band

Case 1 – Below acceptance limit AL

Status: In tolerance

- The result is inside the acceptance interval. However, assuming a normal distribution, the risk that the result is outside the tolerance limit could be up to 2.5%. Uncertainty is directly taken into account. *Green.*

Case 2 – Below tolerance limit TL, greater than acceptance limit AL

Status: In tolerance-Conditional

- The result is outside the acceptance interval but below tolerance limit. However, the observed value is inside the guard band w = TL – AL and the status is conditional on the customer's risk assessment. Uncertainty is directly taken into account. *Yellow.*

Case 3 – Greater than tolerance limit, below rejection limit RL

Status: Out of tolerance-Conditional

- Le result is greater than tolerance limit but outside the rejection interval. However, the observed value is inside the guard band w = TL – RL and the status is conditional on the customer's risk assessment. Uncertainty is directly taken into account. *Yellow.*

Case 4 – Greater than rejection limit RL

Status: Out of tolerance

- The result is inside the rejection interval. Uncertainty is directly taken into account. *Red.*

3650-A1, Matte Blvd., Brossard, (Québec) J4Y 2Z2 Canada – CAN: (450) 444-3500 USA: 1-844-660-7659

Instrumentation Saint-Laurent inc.

80 rue de la propagne
St-Joseph du lac
(Québec), J0N 1M0
Phone: (450) 473-5180
Fax: (450) 473-5207
info@instrumentationsaintlaurent.com

CALIBRATION CERTIFICATE

CERTIFICATE #	CE-EM-136 2023-05-19

CLIENT	
Company:	Services Polytests Inc
Address:	695 B rue Gaudette
	St-Jean-sur-Richelieu, Québec, J3B 7S7

CALIBRATION SPECIFICATION	
Service Procedure:	ISL-004
Required Accuracy:	+\-2°C +\-3%RH
Calibration Frequency:(days)	365

INSTRUMENT SPECIFICATION			
Instrument Type:	Hygrometer	Input Type:	Temp/%RH
Manufacturer:	Fluke	Output Type:	Digitale
Model #:	971	Measurement Type:	Temp/Humidity
Serial #:	10610850	Range:	5-95%RH -20a60°C
Location:	N.A.	Version:	Machine: N.A.

CALIBRATORS SPECIFICATION			
Calibrator:	Vaisala HM141-HMP46	Certification #:	2022007971-Rev-1
Serial #:	V0820123-U4840010	Certification Date:	2022-10-27
Certified by:	Alpha Controls	Next Certification:	2023-10-27
Comments:			
Calibrator:	Probe etalon Hart	Certification #:	2023000242
Serial #:	A26317/00361	Certification Date:	2023-01-20
Certified by:	alpha Controls	Next Certification:	2024-01-20
Comments:			

2023-05-27

Copyright of this certificate belongs to Inst. St-Laurent Inc. and must be reproduced in full, unless a written permission of Inst. St-Laurent Inc.

Instrumentation Saint-Laurent inc.

80 rue de la montagne
St-Joseph du lac
(Québec), J0N 1M0
Phone: (450) 473-6168
Fax: (450) 473-5207
info@instrumentationsaintlaurent.com

CALIBRATION CERTIFICATE

CERTIFICATE #	CE-EM-136 2023-05-19

CALIBRATION RESULTS

Entry Source	Given Value	Actual Value	Deviation Error	After Calib Value	Accuracy	
	Comment					
25.0 °C	25.0 °C	25.1 °C	+0.1 °C	25.1 °C	+/- 2.0 °C	
40.0 °C	40.0 °C	40.4 °C	+0.4 °C	40.4 °C	+/- 2.0 °C	
30.0 %RH	32.8 %RH	31.2 %RH	-1.6 %RH	31.2 %RH	+/- 3.0 %RH	
55.0 %RH	55.8 %RH	54.0 %RH	-1.8 %RH	54.0 %RH	+/- 3.0 %RH	
75.0 %RH	75.5 %RH	75.2 %RH	-0.3 %RH	75.2 %RH	+/- 3.0 %RH	

Environmental Conditions:	Temperature: 22 °C	Humidity: 29 %RH
Comments:		

CALIBRATION DATE/ISSUANCE OF CERTIFICATE	
Calibration Date:	2023-05-19
Next Calibration:	2024-05-18
Certificate Date:	2023-05-19

CALIBRATION CONFORMITY	Before	After
Compliant:	X	X
Non Compliant:		

* Instrumentation St. Laurent Inc. Certify that the above instrument, meets or exceeds the specifications established by the manufacturer. The company's quality system complies with the requirements of ISO 17025:2017 and the standards used to perform the calibration is traceable to NRC and / or NIST.
* Reported uncertainties represent a 95 % of confidence level assuming a normal distribution k=2.
* The declaration of conformity does not include Instrumentation St-Laurent Inc. uncertainty measurement. Decision rule is based on binary statement for simple acceptance rule against ILAC G8 standard and test tolerance limits are based on customer specifications, unless otherwise specified.
* The results presented in this certificate relate only to objects subject to calibration.
* It is the customer's responsibility to ensure that calibrated equipment meets its intended use.
* The date format used in this certificate is: YYYY-MM-DD.

Martin Langlais - Technicien

Version: 2023.05.19

Copyright of this certificate belongs to Inst. St-Laurent Inc. and must be reproduced in full, unless a written permission of Inst. St-Laurent Inc.

Instrumentation Saint-Laurent Inc.
Certified ISO 17025

CLAS
NRC CNRC
CLAS 2010-02

80 rue de la montagne
St-Joseph de Ile
(Québec), J0N 1M0
Phone: (450) 473-6160
Fax: (450) 473-0207
info@instrumentationsaintlaurent.com

CALIBRATION CERTIFICATE

CERTIFICATE #	CE-EM-147 2023-05-10

CLIENT	
Company:	Services Polytests Inc
Address:	695 B rue Gaudette
	St-Jean-sur-Richelieu, Québec, J3B 7S7

CALIBRATION SPECIFICATION	
Service Procedure:	4IN9101
Required Accuracy:	+/- 2.0C
Calibration Frequency:(days)	365

INSTRUMENT SPECIFICATION			
Instrument Type:	Recorder	Input Type:	Divers
Manufacturer:	Keithley	Output Type:	Digital
Model #:	2700	Measurement Type:	Temperature
Serial #:	1349443	Range:	Divers
Location:	N.A.	Version:	Machine: N.A.

CALIBRATORS SPECIFICATION			
Calibrator:	Fluke 744	Certification #:	2023003233
Serial #:	8180008	Certification Date:	2023-04-26
Certified by:	Alpha Controls	Next Certification:	2024-04-26
Comments:			

5F09101 Version 1

Copyright of this certificate belongs to Inst. St-Laurent Inc. and must be reproduced in full, unless a written permission of Inst. St-Laurent Inc.

Instrumentation Saint-Laurent inc.
Certified ISO 17025

CLAS NRC-CNRC
CLAS 2010-02

SCC Accredited LAB

80 rue de la montagne
St-Joseph du lac
(Québec), J0N 1M0
Phone: (450) 473-6180
Fax: (450) 473-5007
info@instrumentationsaintlaurent.com

CALIBRATION CERTIFICATE

CERTIFICATE #	CE-EM-147 2023-05-10

CALIBRATION RESULTS

Entry Source	Given Value	Actual Value	Deviation Error	After Calib Value	Accuracy	Uncertainty
Conformity	Comment					
EntrySource	GivenValue	ActualValue	Deviation	Post Calib	Tolerance	Incertitude
Conformity	Voir Commentaire					

Environmental Conditions:	Temperature: 21 °C	Humidity: 28 %RH
Comments:	Data Acquisition system Conforme	
	Les 2 slot de l'enregistreur ont été vérifié.	

CALIBRATION DATE/ISSUANCE OF CERTIFICATE	
Calibration Date:	2023-05-10
Next Calibration:	2024-05-10
Certificate Date:	2023-05-10

CALIBRATION CONFORMITY	Before	After
Compliant:	X	X
Non Compliant:		

- Instrumentation St. Laurent Inc. Certify that the above instrument, meets or exceeds the specifications established by the manufacturer. The company's quality system complies with the requirements of ISO 17025 :2017 and the standards used to perform the calibration is traceable to NRC and / or NIST.
- Reported uncertainties represent a 95 % of confidence level assuming a normal distribution k=2.
- The declaration of conformity does not include Instrumentation St-Laurent Inc. uncertainty measurement. Decision rule is based on binary statement for simple acceptance rule against ILAC G8 standard and test tolerance limits are based on customer specifications, unless otherwise specified.
- The results presented in this certificate relate only to objects subject to calibration.
- It is the customer's responsibility to ensure that calibrated equipment meets its intended use.
- The date format used in this certificate is: YYYY-MM-DD.

Assessment Service Calibration Laboratory (ASCL) of the National Research Council of Canada (NRC) has assessed and certified calibration laboratory's ability and traceability to the International System of Units (SI) or to standards acceptable according to ASCL. This calibration certificate is issued in accordance with the terms of ASCL certification and accreditation requirements of the Standards Council of Canada (SCC). SCC accreditation number: # 688. ASCL and SCC does not guarantee the accuracy of individual calibrations by accredited laboratories.

Marc Gingras - Technicien

May 17th 2023

Copyright of this certificate belongs to Inst. St-Laurent Inc. and must be reproduced in full, unless a written permission of Inst. St-Laurent Inc.

Instrumentation Saint•Laurent Inc.
Certified ISO 17025

80 rue de la montagne
St-Joseph du lac
(Québec), J0N 1M0
Phone: (450) 473-6160
Fax: (450) 473-5207
info@instrumentationsaintlaurent.com

CALIBRATION CERTIFICATE

CERTIFICATE #	CE-EM-154 2023-05-10

CLIENT	
Company:	Services Polytests Inc
Address:	695 B rue Gaudette
	St-Jean-sur-Richelieu, Québec, J3B 7S7

CALIBRATION SPECIFICATION	
Service Procedure:	4IN9101
Required Accuracy:	+\- 2°C
Calibration Frequency:(days)	365

INSTRUMENT SPECIFICATION			
Instrument Type:	Recordor	Input Type:	Temp
Manufacturer:	Keithley	Output Type:	Digitale
Model #:	7700	Measurement Type:	Temperature
Serial #:	1306774	Range:	Divers
Location:	N/A	Version:	Machine: N.A.

CALIBRATORS SPECIFICATION			
Calibrator:	Fluke 744	Certification #:	AC00919
Serial #:	1693018	Certification Date:	2023-05-01
Certified by:	srp control systems ltd	Next Certification:	2024-04-29
Comments:			

Copyright of this certificate belongs to Inst. St-Laurent Inc. and must be reproduced in full, unless a written permission of Inst. St-Laurent Inc.

Instrumentation Saint-Laurent inc.
Certified ISO 17025

CLAS 2010-52

80 rue de la montagne
St-Joseph-du-lac
(Québec), J0N 1M0
Phone: (450) 472-0160
Fax: (450) 473-5207
info@instrumentationsaintlaurent.com

CALIBRATION CERTIFICATE

CERTIFICATE #	CE-EM-154 2023-05-10

CALIBRATION RESULTS

Entry Source	Given Value	Actual Value	Deviation Error	After Calib Value	Accuracy	Uncertainty
Conformity	Comment					
-17.000 mV	-17.000 mV	-16.971 mV	+0.029 mV	-16.971 mV	+/- 0.500 mV	0.1 mV
Compliant	Input#1					
0.000 mV	0.000 mV	0.030 mV	+0.030 mV	-16.971 mV	+/- 0.500 mV	0.1 mV
Compliant	Input#1					
20.000 mV	20.000 mV	20.031 mV	+0.31 mV	20.031 mV	+/- 0.500 mV	0.1 mV
Compliant	Input#1					
30.000 mV	30.000 mV	30.036 mV	+0.036 mV	30.036 mV	+/- 0.500 mV	0.1 mV
Compliant	Input#2					
30.000 mV	30.000 mV	30.036 mV	+0.036 mV	30.036 mV	+/- 0.500 mV	0.1 mV
Compliant	Input#3 Non-Conforme					
5.000 V.DC.	5.000 V.DC.	4.999 V.DC.	-0.001 V.DC.	4.999 V.DC.	+/- 0.050 V.DC.	0.1 V.DC.
Compliant	Input#4					
30.000 mV	30.000 mV	29.516 mV	-0.484 mV	29.516 mV	+/- 0.500 mV	0.1 mV
Compliant	Input#5					
30.000 mV	30.000 mV	29.528 mV	-0.472 mV	29.528 mV	+/- 0.500 mV	0.1 mV
Compliant	Input#6					
100.00 Ohms	100.00 Ohms	101.014 Ohms	+1.14 Ohms	101.14 Ohms	+/- 0.10 Ohms	+/- 0.051 Ohms
Non-Compliant	Input#7					
100.00 Ohms	100.00 Ohms	100.97 Ohms	+0.97 Ohms	100.97 Ohms	+/- 0.10 Ohms	+/- 0.051 Ohms
Non-Compliant	Input#8					
100.00 Ohms	100.00 Ohms	100.96 Ohms	+0.96 Ohms	100.96 Ohms	+/- 0.10 Ohms	+/- 0.051 Ohms
Non-Compliant	Input#9					
100.00 Ohms	100.00 Ohms	100.88 Ohms	+0.88 Ohms	100.88 Ohms	+/- 0.10 Ohms	+/- 0.051 Ohms
Non-Compliant	Input#10					
100.0 °C	100.0 °C	99.7 °C	-0.3 °C	99.7 °C	+/- 2.0 °C	+/- 0.3 °C
Compliant	Input#11TypeT					
100.0 °C	100.0 °C	99.7 °C	-0.3 °C	99.7 °C	+/- 2.0 °C	+/- 0.3 °C
Compliant	Input#12TypeT					
100.0 °C	100.0 °C	99.8 °C	-0.2 °C	99.8 °C	+/- 2.0 °C	+/- 0.2 °C
Compliant	Input#13 TypeJ					
100.0 °C	100.0 °C	99.8 °C	-0.2 °C	99.8 °C	+/- 2.0 °C	+/- 0.2 °C
Compliant	Input#14TypeJ					
100.0 °C	100.0 °C	99.8 °C	-0.2 °C	99.8 °C	+/- 2.0 °C	+/- 0.2 °C
Compliant	Input#15 TypeJ					
100.0 °C	100.0 °C	99.7 °C	-0.3 °C	99.7 °C	+/- 2.0 °C	+/- 0.2 °C
Compliant	Input#16TypeJ					
100.00 Ohms	100.00 Ohms	101.05 Ohms	+1.05 Ohms	101.05 Ohms	+/- 0.10 Ohms	+/- 0.051 Ohms
Non-Compliant	Input#17					
100.00 Ohms	100.00 Ohms	101.05 Ohms	+1.05 Ohms	101.05 Ohms	+/- 0.10 Ohms	+/- 0.051 Ohms
Non-Compliant	Input#18					

Copyright of this certificate belongs to Inst. St-Laurent inc. and must be reproduced in full, unless a written permission of Inst. St-Laurent Inc.

Version 1

Instrumentation Saint-Laurent inc.
Certified ISO 17025

CLAS
NRC-CNRC
CLAS 3010-02

SCC Accredited
Lab
Laboratoire d'étalonnage
#1689

80 rue de la montagne
St-Joseph du lac
(Québec), J0N 1M0
Phone: (450) 473-6180
Fax: (450) 473-5303
info@instrumentationsaintlaurent.com

CALIBRATION CERTIFICATE

CERTIFICATE #	CE-EM-154 2023-05-10

CALIBRATION RESULTS

Entry Source	Given Value	Actual Value	Deviation Error	After Calib Value	Accuracy	Uncertainty
Conformity	Comment					
100.00 Ohms	100.00 Ohms	101.05 Ohms	+0.05 Ohms	101.05 Ohms	+/- 0.10 Ohms	+/- 0.051 Ohms
Non-Compliant	Input#19					
100.00 Ohms	100.00 Ohms	100.98 Ohms	+0.98 Ohms	100.98 Ohms	+/- 0.10 Ohms	+/- 0.051 Ohms
Non-Compliant	Input#20					
12.000 mA	12.000 mA	12.000 mA	0.000 mA	12.000 mA	+/- 0.100 mA	1.00 mA
Compliant	Input#21					
12.000 mA	12.000 mA	------- mA	------- mA	------- mA	+/- 0.100 mA	1.00 mA
Non-Compliant	Input#22 Fonctionne pas					

Environmental Conditions: Temperature: 21 °C Humidity: 28 %RH

Comments: Test avec EM-147

CALIBRATION DATE/ISSUANCE OF CERTIFICATE	
Calibration Date:	2023-05-10
Next Calibration:	2024-05-10
Certificate Date:	2023-05-10

CALIBRATION CONFORMITY	Before	After
Compliant:	X	X
Non Compliant:		

- Instrumentation St. Laurent Inc. Certify that the above instrument, meets or exceeds the specifications established by the manufacturer. The company's quality system complies with the requirements of ISO 17025 :2017 and the standards used to perform the calibration is traceable to NRC and / or NIST.
- Reported uncertainties represent a 95 % of confidence level assuming a normal distribution k=2.
- The declaration of conformity does not include Instrumentation St-Laurent Inc. uncertainty measurement. Decision rule is based on binary statement for simple acceptance rule against ILAC G8 standard and test tolerance limits are based on customer specifications, unless otherwise specified.
- The results presented in this certificate relate only to objects subject to calibration.
- It is the customer's responsability to ensure that calibrated equipment meets its intended use.
- The date format used in this certificate is: YYYY-MM-DD.

Assessment Service Calibration Laboratory (ASCL) of the National Research Council of Canada (NRC) has assessed and certified calibration laboratory's ability and traceability to the International System of Units (SI) or to standards acceptable according to ASCL. This calibration certificate is issued in accordance with the terms of ASCL certification and accreditation requirements of the Standards Council of Canada (SCC). SCC accreditation number: # 669. ASCL and SCC does not guarantee the accuracy of individual calibrations by accredited laboratories.

Marc Gingras - Technicien

May 17th 2023

Copyright of this certificate belongs to Inst. St-Laurent Inc. and must be reproduced in full, unless a written permission of Inst. St-Laurent Inc.

Trescal

[CALIBRATION SOLUTIONS TO IMPROVE YOUR PERFORMANCE]
[LA MÉTROLOGIE AU SERVICE DE VOTRE PERFORMANCE]

[illegible]

Certificat d'Étalonnage / Certificate of Calibration

CLIENT :
SERVICES POLYTESTS INC.
695-B GAUDETTE
ST-JEAN-SUR-RICHELIEU, QC J3B7S7

Description: STOPWATCH
Fabricant/ Manufacturer: EXTECH
Modèle/ Model : 365510
No série / Serial no : 131636
Inventaire / Asset # : EM-175

CERTIFICAT No / Certificate No: 380877

PROCÉDURE / Procedure : TRESCAL - EXTECH_365510

Date étalonnage/ Calibration Performed : 2022-12-22

Echéance/ Due Date : 2023-12-22

Type de résultat / *Results type* : As-Found = As-Left

Résultats d'essais / *Test results* : Conforme / In Tolerance

Conditions de mesure / Measurement conditions

TEMPÉRATURE / Temp. : 22.7°C

HUMIDITÉ / Humidity : 29% RH

Usage restreint/ *Restricted use* : ☐

Réparation effectuée / *Repair performed* : ☐

Ajustement effectué / *Adjustment performed* : ☐

ÉTALONS UTILISÉS/ Standards Used:

Identification	Manuf.	Model	Description	Ser. #	Étalonné/ Cal.	Échéance/ Due
PR0283	H-P	53131 A	FREQUENCY COUNTER	3736A24271	2022-10-24	2023-10-24
PR0377	AGILENT	33250A	ARBITRARY FUNCTION WAVEFORM GEN.	MY40003210	2022-10-19	2023-10-19

Les spécifications mentionnées comme limites de tolérances d'essai sont celles établies par le manufacturier, sauf indication contraire.
Test tolerance limits are based on manufacturers specifications unless stated otherwise.

NOTES :

2023-01-23

Technicien :
Technician

M. BARBAK

Le système qualité de la société est conforme aux exigences de la norme ISO 17025 et les étalons utilisés pour le processus d'étalonnage sont retraçables au SI par l'entremise du CNRC et/ou du NIST.
Our quality system complies with the requirements of ISO 17025 and the standards used for the calibration are traceable to SI through NRC and/or NIST.

[illegible]

Trescal

) CALIBRATION SOLUTIONS TO IMPROVE YOUR PERFORMANCE)
) LA MÉTROLOGIE AU SERVICE DE VOTRE PERFORMANCE)

Certificat d'Étalonnage
Certificate of Calibration

380877

CLIENT / Customer : SERVICES POLYTESTS INC.

DESCRIPTION / Description : STOPWATCH

MANUFACTURIER / Manufacturer : EXTECH

MODÈLE / Model : 365510

DESCRIPTION Description	LIMITES Limits	LECTURES Readings	LIMITES Limits
	Min	Comptes / Counts Chronomètre/timer 179944	Max

Temps écoulé, chronomètre sous test / Elapsed time on test stopwatch

Minutes	Seconds	1/100 sec
29	59	44

Total au compteur / Reference timer: 179938.6 comptes/counts

(Δt) Deviation (1/100sec): 5.40

Deviation Par jour/ Per day (%):	0.0030 %	* Secondes	Deviation 24hrs	* Secondes
Deviation Par jour/ Per day (sec):	**2.59 sec**	-3.00	**2.59**	3.00

* Tolérances basées sur une déviation maximale de 3 sec/jour
* Tolerances based on a 3 sec/day maximum deviation

Incertitude/ Uncertainty: ±37 ms

Lorsque fournies dans le rapport, les incertitudes de mesure sont des incertitudes élargies représentant un niveau de confiance d'approximativement 95% , obtenu en multipliant l'incertitude-type composée par un facteur de couverture de k=2.
When supplied in the report, the measurement uncertainties are expanded uncertainties representing a confidence level of approximately 95% , obtain by multiplying the combined standard uncertainty by a coverage factor of k=2.

POLYCONTROLS

CLAS 2000-01

CALIBRATION CERTIFICATE # 19901

Calibration date : 2023-06-28
Certificate issued : 2023-06-28

Services Polytests
695 B Gaudette street
St-Jean-sur-Richelieu, Québec, Canada
J3B 7S7

Calibration of
Positive displacement flow meter Shinigawa DCDa-2c S/N : 23544

QUALITY PROGRAM CONFORMANCE

All calibrations are performed in accordance with Polycontrols Laboratory Quality Assurance Manual and conform to ISO/IEC 17025: 2017, ISO 9001 – 2015 and/or other quality requirements defined in customers purchase descriptions. The results are strictly valid for the device under test or calibration. If applicable, the decision rule is described in the certificate.

TRACEABILITY

The traceability for flow standard to the National Institute of Standards and Technology, NIST, is maintained by Fluke Corporation of Phoenix, Arizona and conform to ISO/IEC 17025, ANSI/NCSL Z540-1-1994, ISO-10012-1 and MIL-STD 45662A.

The Calibration Laboratory Assessment Service (CLAS) of the National Research Council of Canada (NRC) has assessed and certified specific calibration capabilities of this laboratory and traceability to the International System of Units (SI) or to standards acceptable to the CLAS program. This certificate of calibration is issued in accordance with the conditions of certification granted by CLAS and the conditions of accreditation granted by the Standards Council of Canada (SCC). Neither CLAS nor SCC guarantee the accuracy of individual calibrations by accredited laboratories.

CALIBRATION OF MEASURING AND TEST EQUIPMENT

For calibration measurement capability, please refer to the Canadian Calibration Network web page at the National Research Council of Canada. This laboratory is accredited by the Standards Council of Canada as part of the Calibration Laboratory Assessment Service (CLAS) program and is listed at nrc.canada.ca.

This document forms part of the Certificate of Accreditation issued by the Standards Council of Canada (SCC). The original version is available in the Directory of Accredited Laboratories on the SCC website at www.scc.ca.

CONDITION SUMMARY OF THE DEVICE UNDER TEST

Initial conditions	In good condition
Work done	Calibration of the instrument Initial readings = Final readings, no adjustment
Results	Final readings in tolerance with K factor = 0.98
Remarks	Calibration frequency every 6 months Tolerance modified per end user request

B Poirier

Bernard Poirier
Metrologist

Laboratory Manager

©2023 Polycontrols • This calibration document shall not be reproduced except in full, without written approval of Polycontrols inc.
3650, Monte blvd. (Unit A-1), Brossard (Québec), Canada, J4Y 2Z2
Tel: (450) 444-3600 Fax: (450) 444-1088 www.polycontrols.com

POLYCONTROLS

CLAS 2009-02

Calibration certificate # 19901

Serial Number:	23544	Test stand:	3
Calibration Date:	2023-06-28	Procedure:	POS-CAL-005
Instrument ID:	EM-178	Decision rule:	Method #3

Standard equipment used for final calibration

Description	Model	Serial #	Traceability	Due date
Fluke molbloc_120 slpm	2E2-S	237	1500349857	2024-03-02
Fluke molbloc_30 slpm	3E4-VCR-V-Q	2359	1500349861	2024-03-02
Fluke molbox1	Molbox1	881	1500341962	2023-10-18
RTD Mist	M22	2208101	20230003750	2024-05-17
Module 44.5 PSI over Baro 163671	Module 30	160659	20230003753	2024-05-18

Final specifications of the device under test		Calibration conditions	
Gas	Air	Gas	Air
Operation temperature		Ambient temperature	24 °C
Inlet pressure		Ambient pressure	1003.23 mbar
Outlet pressure		Orientation	Horizontal
Reference temperature		Seals	Viton
Reference pressure		Valve	
Range	10-2000 ALH		
Input/Output Signals	-		
Supply			
Accuracy ±2 %F.S.			

Final readings

Test Flow ALH	Device under test L	Measured values Pressure PSIA	Temperature °C	Reference L	Calculated Reference L	Calculated Error L	Acceptable Error L	Uncertainty k = 2 L	TUR
367.6754	61.6028	14.565	23.59	60.1518	61.2064	0.3964	1.2241	0.2037	>4
1217.1579	203.1246	14.571	23.60	199.5789	202.9992	0.1254	4.0600	0.6757	>4
2014.1565	333.8488	14.581	23.89	329.5098	335.3419	-1.3931	6.7048	0.8272	>4

POLYCONTROLS

CLAS 2009-02

Calibration certificate # 19901

Serial Number:	23544	Test stand:	3
Calibration Date:	2023-06-28	Procedure:	POS-CAL-005
Instrument ID:	EM-178	Decision rule:	Method #3

Final results

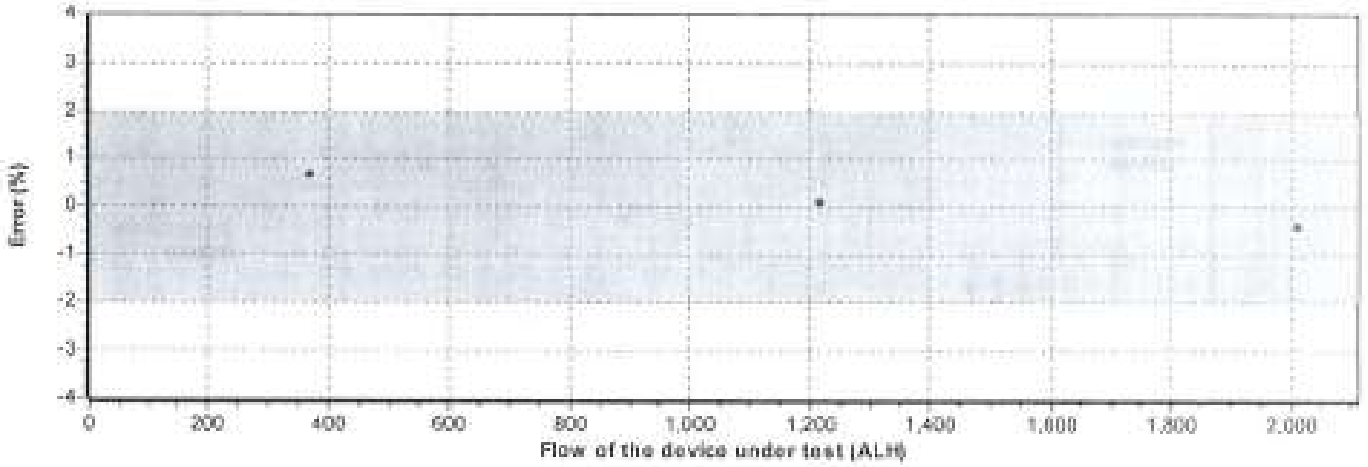

See the appendix for the guideline of decision rule

cal. fact 0.993565

August 1st 2023

Appendix for the decision rule

Method #2 Non-binary Statement with Guard Band, uncertainty directly taken into account

The decision rule uses a guard band to define the acceptance and rejection interval. The acceptance limit is defined by the following mathematical formula AL = TL – w and the rejection limit RL = TL + w, where w = kU. The multiple *k* that is multiplied by the expanded measurement uncertainty U can be defined following ILAC G8: 2019 table 1 section 5.2. The expanded measurement uncertainty U has a 95% coverage probability (k = 2). Non-binary statement with guard band exists when the result is limited to four choices: pass, conditional pass, conditional fail, and fail.

Statements of conformity are reported as:

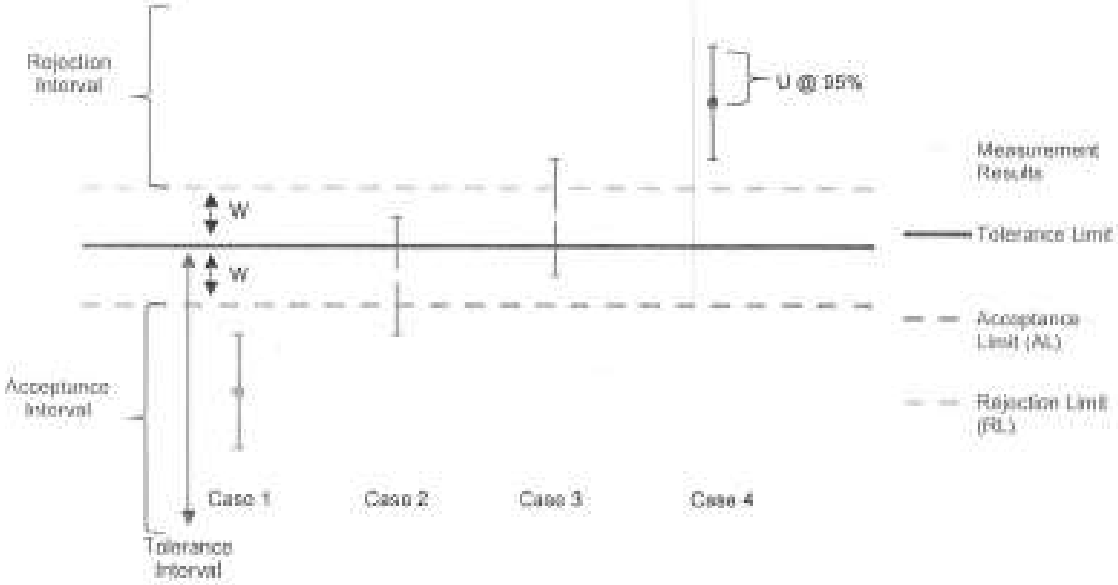

Graphical representation of a Non-Binary Statement with a Guard Band

Case 1 – Below acceptance limit AL

Status: In tolerance

- The result is inside the acceptance interval. However, assuming a normal distribution, the risk that the result is outside the tolerance limit could be up to 2.5%. Uncertainty is directly taken into account. *Green.*

Case 2 – Below tolerance limit TL, greater than acceptance limit AL

Status: In tolerance-Conditional

- The result is outside the acceptance interval but below tolerance limit. However, the observed value is inside the guard band w = TL – AL and the status is conditional on the customer's risk assessment. Uncertainty is directly taken into account. *Yellow.*

Case 3 – Greater than tolerance limit, below rejection limit RL

Status: Out of tolerance-Conditional

- Le result is greater than tolerance limit but outside the rejection interval. However, the observed value is inside the guard band w = TL – RL and the status is conditional on the customer's risk assessment. Uncertainty is directly taken into account. *Yellow.*

Case 4 – Greater than rejection limit RL

Status: Out of tolerance

- The result is inside the rejection interval. Uncertainty is directly taken into account. *Red.*

3650-A1, Matte blvd., Brossard, (Quebec) J4Y 2Z2 Canada – CAN: (450) 444-3800 USA: 1-844-660-7659

POLYCONTROLS

CLAS 2009-02

CALIBRATION CERTIFICATE # 19902

Calibration date : 2023-06-28
Certificate issued : 2023-06-28

Services Polytests
695 B Gaudette street
St-Jean-sur-Richelieu, Québec, Canada
J3B 7S7

Calibration of
Positive displacement flow meter Shinigawa DCDa-2c S/N : 23543

QUALITY PROGRAM CONFORMANCE

All calibrations are performed in accordance with Polycontrols Laboratory Quality Assurance Manual and conform to ISO/IEC 17025: 2017, ISO 9001 – 2015 and/or other quality requirements defined in customers purchase descriptions. The results are strictly valid for the device under test or calibration. If applicable, the decision rule is described in the certificate.

TRACEABILITY

The traceability for flow standard to the National Institute of Standards and Technology, NIST, is maintained by Fluke Corporation of Phoenix, Arizona and conform to ISO/IEC 17025, ANSI/NCSL Z 540-1-1994, ISO-10012-1 and MIL-STD 45662A.

The Calibration Laboratory Assessment Service (CLAS) of the National Research Council of Canada (NRC) has assessed and certified specific calibration capabilities of this laboratory and traceability to the International System of Units (SI) or to standards acceptable to the CLAS program. This certificate of calibration is issued in accordance with the conditions of certification granted by CLAS and the conditions of accreditation granted by the Standards Council of Canada (SCC). Neither CLAS nor SCC guarantee the accuracy of individual calibrations by accredited laboratories.

CALIBRATION OF MEASURING AND TEST EQUIPMENT

For calibration measurement capability, please refer to the Canadian Calibration Network web page at the National Research Council of Canada. This laboratory is accredited by the Standards Council of Canada as part of the Calibration Laboratory Assessment Service (CLAS) program and is listed at nrc.canada.ca.

This document forms part of the Certificate of Accreditation issued by the Standards Council of Canada (SCC). The original version is available in the Directory of Accredited Laboratories on the SCC website at www.scc.ca.

CONDITION SUMMARY OF THE DEVICE UNDER TEST

Initial conditions	In good condition
Work done	Calibration of the instrument Initial readings = Final readings, no adjustment
Results	Final readings in tolerance with K factor = 0.98
Remarks	Calibration frequency every 6 months Tolerance modified per end user request

B Poirier

Bernard Poirier
Metrologist

Laboratory Manager

©2023 Polycontrols • This calibration document shall not be reproduced except in full, without written approval of Polycontrols inc.
3650, Métiz blvd. (Unit A-1), Brossard (Québec), Canada, J4Y 2Z2
Tel: (450) 444-3600 Fax: (450) 444-1088 www.polycontrols.com

POLYCONTROLS

CLAS 2005-02

Calibration certificate # 19902

Serial Number:	23543	Test stand:	3
Calibration Date:	2023-06-28	Procedure:	POS-CAL-005
Instrument ID:	EM-179	Decision rule:	Method #3

Standard equipment used for final calibration

Description	Model	Serial #	Traceability	Due date
Fluke molbloc_120 slpm	2E2-S	237	1500349857	2024-03-02
Fluke molbloc_30 slpm	3E4-VCR-V-Q	2359	1500349861	2024-03-02
Fluke molbox1	Molbox1	881	1500341962	2023-10-18
RTD Mist	M22	2208101	2023003750	2024-05-17
Module 44.5 PSI avec Baro 163371	Module 30	160659	2023003753	2024-05-18

Final specifications of the device under test		Calibration conditions	
Gas	Air	Gas	Air
Operation temperature		Ambient temperature	23.5 °C
Inlet pressure		Ambient pressure	1003.78 mbar
Outlet pressure		Orientation	Horizontal
Reference temperature		Seals	Viton
Reference pressure		Valve	
Range	10-2000 ALH		
Input/Output Signals	-		
Supply			
Accuracy ±2 %O.R.			

Final readings

Test Flow ALH	Device under test L	Measured values Pressure PSIA	Temperature °C	Reference L	Calculated Reference L	Calculated Error L	Acceptable Error L	Uncertainty k = 2 L	TUR
365.4658	60.9560	14.568	23.09	59.9099	60.8444	0.1116	1.2169	0.2024	>4
1224.3194	203.4970	14.577	22.80	201.0285	203.8289	-0.3319	4.0766	0.6777	>4
1998.4338	329.6818	14.591	22.57	328.0693	332.0705	-2.3887	6.6414	0.8167	>4

POLYCONTROLS

CLAS 2009.01

Calibration certificate # 19902

Serial Number:	23543	Test stand:	3
Calibration Date:	2023-06-28	Procedure:	POS-CAL-005
Instrument ID:	EM-179	Decision rule:	Method #3

Final results

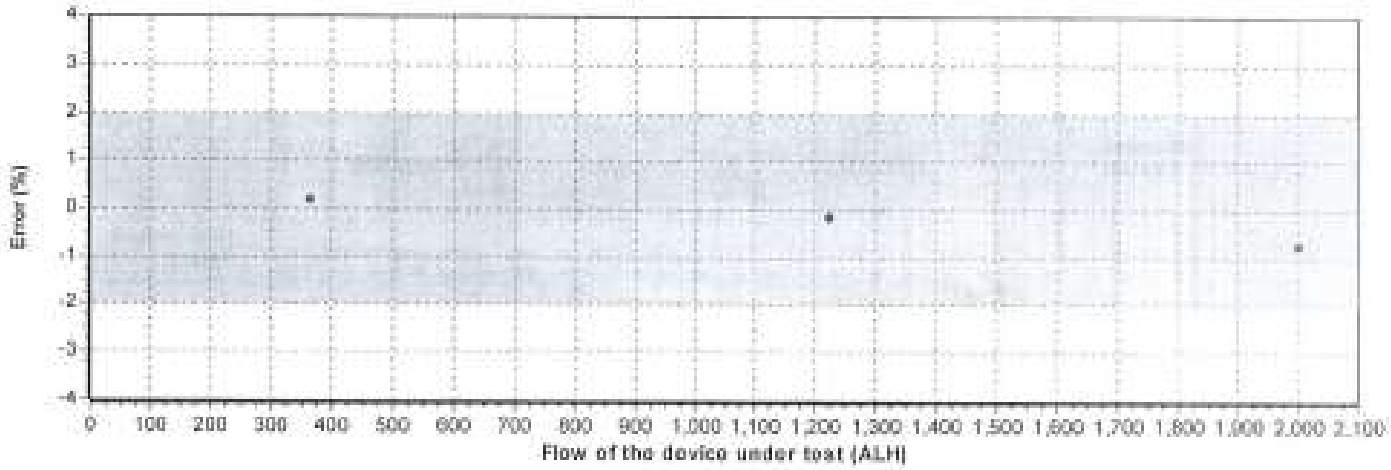

See the appendix for the guideline of decision rule

Calibrator 0.998169

August 1st 2023

Appendix for the decision rule

Method #3 Non-binary Statement with Guard Band, uncertainty directly taken into account

This decision rule uses a guard band to define the acceptance and rejection interval. The acceptance limit is defined by the following mathematical formula AL = TL – w and the rejection limit RL = TL + w, where w = U. The multiple r that is multiplied by the expanded measurement uncertainty U can be defined following ILAC G8: 2019 table 1 section 5.2. The expanded measurement uncertainty U has a 95% coverage probability (k = 2). Non-binary statement with guard band exists when the result is limited to four choices: pass, conditional pass, conditional fail, and fail.

Statements of conformity are reported as:

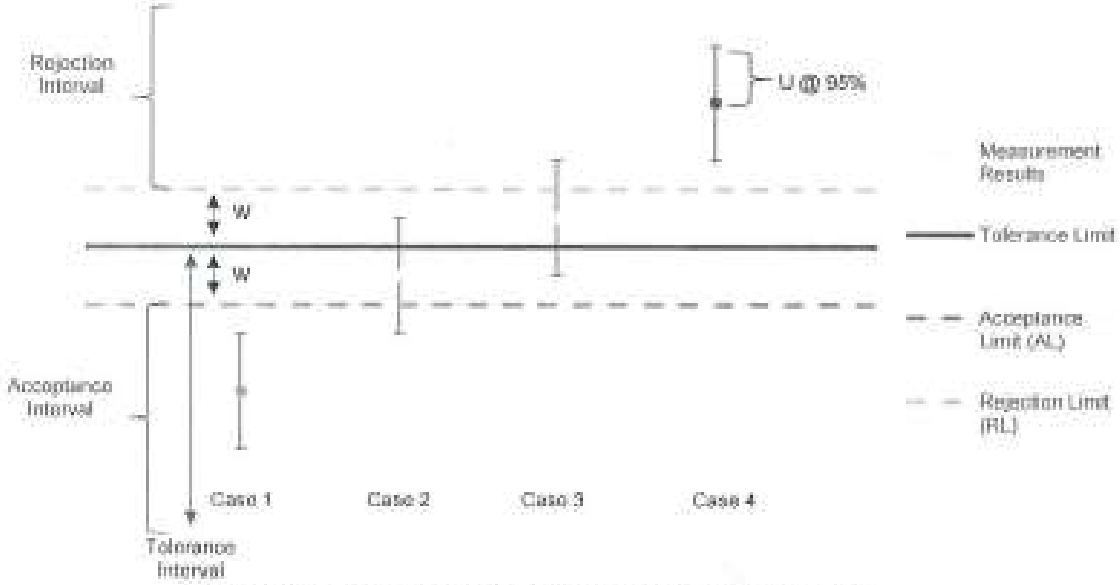

Graphical representation of a Non-Binary Statement with a Guard Band

Case 1 – Below acceptance limit AL

Status: In tolerance

- The result is inside the acceptance interval. However, assuming a normal distribution, the risk that the result is outside the tolerance limit could be up to 2.5%. Uncertainty is directly taken into account. *Green.*

Case 2 – Below tolerance limit TL, greater than acceptance limit AL

Status: In tolerance-Conditional

- The result is outside the acceptance interval but below tolerance limit. However, the observed value is inside the guard band w = TL – AL and the status is conditional on the customer's risk assessment. Uncertainty is directly taken into account. *Yellow.*

Case 3 – Greater than tolerance limit, below rejection limit RL

Status: Out of tolerance-Conditional

- Le result is greater than tolerance limit but outside the rejection interval. However, the observed value is inside the guard band w = TL – RL and the status is conditional on the customer's risk assessment. Uncertainty is directly taken into account. *Yellow.*

Case 4 – Greater than rejection limit RL

Status: Out of tolerance

- The result is inside the rejection interval. Uncertainty is directly taken into account. *Red.*

3650-A1, Matte Blvd., Brossard, (Quebec) J4Y 2Z2 Canada – CAN: (450) 444-3600 USA: 1-844-660-7659

ID Certificat de Calibration
520501-087-101023-ACC-USI

METTLER TOLEDO

Mettler-Toledo Inc.
Service Division
1900 Polaris Parkway
Columbus, OH 43240
1-800-METTLER

Accredited by the American Association for Laboratory Accreditation (A2LA)
CALIBRATION CERT #1902.01
ISO 17025 Registered
ANSI/NCSL Z540-1 Accredited

Certificat de Calibration de Précision

Accuracy Calibration Certificate

Client

Compagnie:	Services Polytools		
Adresse:	695-B Rue Gaudette		
Ville:	Saint-Jean-Sur-Richelieu	Contact:	Danick Power
Zip/Code Postal:	J3B 7S7		
État/Province:	Québec		

Weighing Device

Manufacturier:	Ohaus	Type d'Instrument:	Weighing Instrument
Modèle:	balance	# Outil:	EM-204
No. Série:	8336030306	Modèle Indicateur:	N/D
Building:	N/D	Terminal Serial No.:	N/D
Floor:	N/D	Terminal Asset No.:	N/D
Room:	N/D		

Plage	Capacité Max	Lisibilité (d)
1	30000 g	1 g

Procedure

Instruction de Calibration:	ASTM E898 - 20
Instruction de travail METTLER TOLEDO:	30080953

This calibration certificate including procedures and uncertainty estimation also complies with EURAMET cg-18 v 4.0.

Ce certificat de calibration contient des mesures pour la calibration Tel que Trouvé. Aucune calibration Tel que Laissé n'a été effectuée puisque l'appareil n'a pas été modifié suite à la calibration Tel que Trouvé. Par conséquent, les résultats Tel que Laissé correspondent aux résultats Tel que Trouvé.

	Température	
Tel que Trouvé	Start: 20.0 °C	End: 21.0 °C

Environmental conditions have been verified to ensure the accuracy of the calibration.

This certificate is issued in accordance with the conditions of accreditation granted by A2LA, which is based on ISO/IEC 17025. A2LA has assessed the measurement capability of the laboratory and its traceability to recognized national standards.

Date calibration Tel que Trouvé:	10-10-2023
Date calibration Tel que Laissé:	N/D
Date d'Émission:	10-10-2023
Requested Next Calibration Date:	31-10-2024

Authorized A2LA Signatory:

Stephane Poisson

2023-10-23

© METTLER TOLEDO
Le document a été fourni par voie électronique.

Résultats de Mesure

Répétabilité

Charge de Test: 15000 g

	Tel que Trouvé	Tel que Laissé
1	15000 g	N/D
2	15000 g	N/D
3	15000 g	N/D
4	15000 g	N/D
5	15000 g	N/D
6	15000 g	N/D

Écart Type	0.0 g	N/D

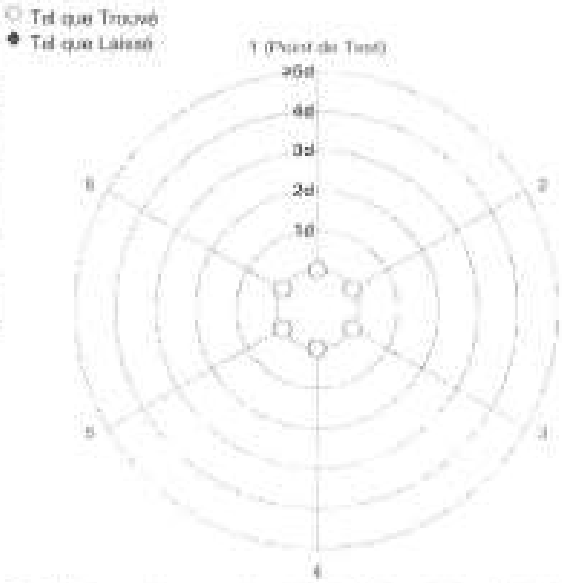

The "d" in the graph represents the readability of the range/interval in which the test was performed.

The results of this graph are based upon the absolute values of the differences from the mean value.

Excentricité

Charge de Test: 10000 g

Position	Tel que Trouvé	Tel que Laissé
1	10000 g	N/D
2	10000 g	N/D
3	10000 g	N/D
4	10000 g	N/D
5	10000 g	N/D

Déviation Maximale	0 g	N/A



Tel que Trouvé

The "d" in the graph represents the readability of the range/interval in which the test was performed.

Erreur d'indication

Tel que Trouvé

	Reference Value	Indication	Erreur d'indication	Incertitude Élargie	k
1	0 g	0 g	0 g	0.6 g	2
2	7500 g	7500 g	0 g	1.0 g	2
3	15000 g	15000 g	0 g	1.5 g	2
4	22000 g	21999 g	-1 g	2.0 g	2
5	30000 g	29998 g	-2 g	2.7 g	2
6	0 g	0 g	0 g	0.6 g	2

© METTLER TOLEDO
Le document a été fourni par voie électronique.

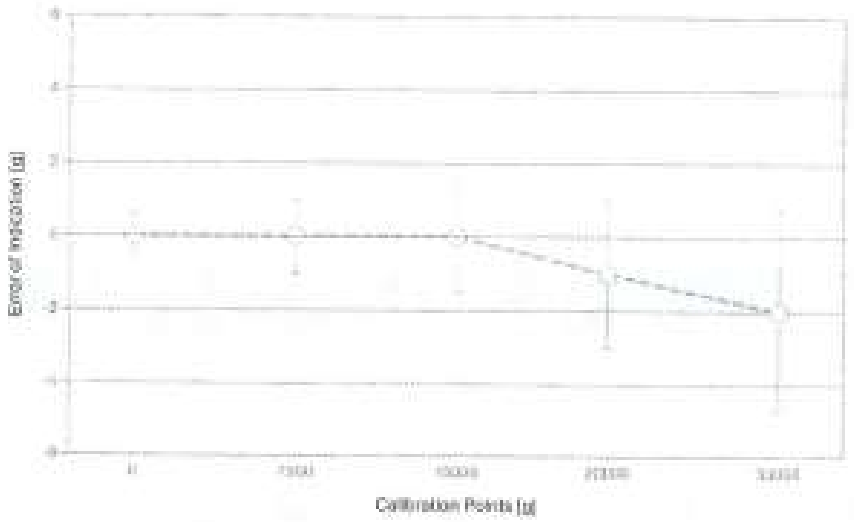

For improved legibility of the graphics only increasing measurement points are shown and measurement points close to zero are not displayed.

The uncertainty stated is the expanded uncertainty at calibration obtained by multiplying the standard combined uncertainty by the coverage factor k - which can be larger than 2 according to ASTM E898 and EURAMET cg-18. The value of the measurand lies within the assigned range of values with a probability of approximately 95%.

The user is responsible for maintaining environmental conditions and the settings of the weighing instrument when it was calibrated.
Les résultats présents dans ce certificat sont applicables uniquement aux équipements étalonnés.

Test Equipment

Tous les poids utilisés pour le contrôle métrologique sont retraçables aux étalons Nationaux et Internationaux. Les poids ont été calibrés et certifiés par un laboratoire de calibration accrédité.

Jeu de Poids 1: OIML M1

Weight Set Number:	M	Date d'Émission:	15-05-2023
# Certificat:	1400658	Date de Calibration Due:	15-05-2024

Jeu de Poids 2: OIML M1

Weight Set Number:	BE10	Date d'Émission:	11-08-2023
# Certificat:	M23-0320	Date de Calibration Due:	11-08-2024

Remarques

N/D

End of Accredited Section

The information below and any attachments to this calibration certificate are not part of the accredited calibration.

Incertitude de Mesure du dispositif de pesage en opération

Stated is the expanded uncertainty with k=2 in use. The formula shall be used for the estimation of the uncertainty under consideration of the errors of indication. The value R represents the net load indication in the unit of measure of the device.

Coefficient de température pour l'évaluation de l'incertitude de mesure en opération: 10.0 · 10^{-6} / K

Plage d'opération sur le site pour l'évaluation de l'incertitude de mesure en opération: 21 K

Linéarisation de l'Équation d'Incertitude

Plage			Tel que Trouvé	Tel que Laissé
	d	Max		
1	1 g	30000 g	U_I = 816 mg + 0.165 mg/g · R	N/A

To optimize the stability of the linearization, besides of the zero load only increasing measurement points with a test load of 5% of the measurement range or larger are taken for the calculation of the linear equation.

Absolute and Relative Measurement Uncertainty in Use for Various Net Indications (Examples)

Indication Net	Tel que Trouvé		Tel que Laissé	
30 g	0.82 g	2.7%	N/A	N/A
300 g	0.87 g	0.29%	N/A	N/A
3000 g	1.3 g	0.044%	N/A	N/A
15000 g	3.3 g	0.022%	N/A	N/A
30000 g	5.8 g	0.019%	N/A	N/A

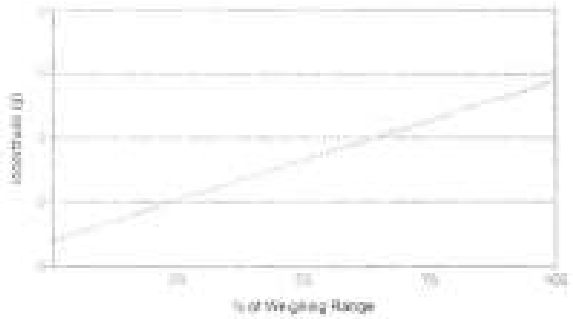

Tel que Trouvé

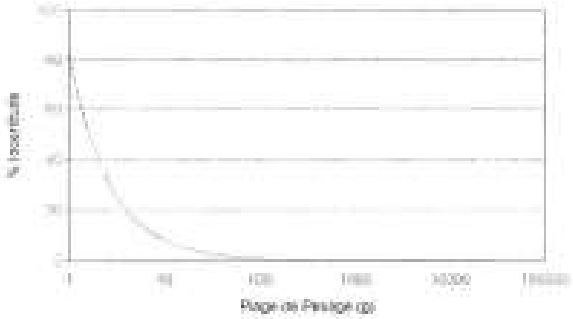

Tel que Laissé

METTLER TOLEDO Service

Handbook 44 Tolerance Assessment (Entretien)

Assessment done without considering measurement uncertainty.
Les mesures du certificat de calibration joint ont été évaluées selon les tolérances définies par NIST HB44.

	Tel que Trouvé	Tel que Laissé
Global	✓	N/D

✓ = Passed
✗ = Failed

Weighing Device

Range	Max. Capacity	Readability (d)	Verification Scale Interval (e)	Class
1	30000 g	1 g	1 g	III

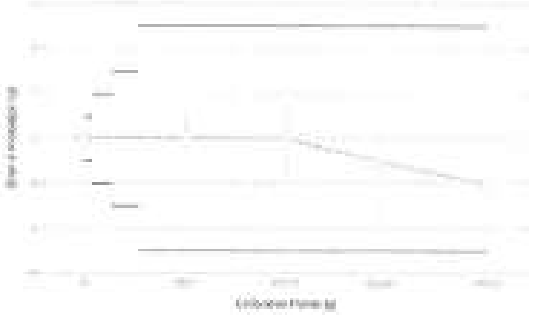

Tolerances according to NIST Handbook 44

Test Load		Tolérance
From	To	
0 g	0 g	0.25 g
1 g	500 g	1 g
501 g	2000 g	2 g
2001 g	4000 g	3 g
4001 g	30000 g	5 g

○ Tel que Trouvé
◆ Tel que Laissé
— Tolérance

Eccentricity and Repeatability

Test	Test Load	Tolérance	As Found		As Left	
			Max. Error / Range	Result	Max. Error / Range	Result
Excentricité (Maximum Error)	10000 g	5 g	0 g	✓	N/D	N/D
Excentricité (Plage)	10000 g	5 g	0 g	✓	N/D	N/D
Répétabilité (Maximum Error)	15000 g	5 g	0 g	✓	N/D	N/D
Répétabilité (Plage)	15000 g	5 g	0 g	✓	N/D	N/D

Max. Error: Maximum of the absolute values of the individual errors.
Range: Difference between largest and smallest measurement value.

Error of Indication

	Reference Value	Tolérance	As Found		As Left	
			Error of Indication	Result	Error of Indication	Result
1	0 g	1 g	0 g	✓	N/D	N/D
2	7500 g	5 g	0 g	✓	N/D	N/D
3	15000 g	5 g	0 g	✓	N/D	N/D
4	22000 g	5 g	-1 g	✓	N/D	N/D
5	30000 g	5 g	-2 g	✓	N/D	N/D
6	0 g	1 g	0 g	✓	N/D	N/D

© METTLER TOLEDO
Ce document a été fourni par voie électronique.

TRANSCAT
Trust in every measure

ACCREDITATION ISO 17025
SCC Scope Number 668

CALIBRATION CERTIFICATE

9800 Chemin de la Côte-de-Liesse, Montréal, QC H8T 1A1
www.dispersion.ca 1.866.380.5066

Client :	Polytests	**Certificate Number :**	**157-77C603-222**
Address :	695 B rue Gaudette Saint-Jean-sur-Richelieu, QC J3B7S7	**Calibration date :**	04-03-2022

Technician:
Coutu, Daniel

David Llorens, Quality Manager

SERVICE DESCRIPTION:

Masses description :	NIST F	**Date approved :**	14-03-2022
Precision class :	NIST F	**Next Calibration :**	04-03-2026
Density :	7.7g/cm³	**CCN accreditation # :**	668
Identification (if unique) :	DI000D532	**CLAS Certification # :**	2010-01

Test conditions :	Temp °C:	21.05	kPa Pressure:	102.3	Humidity:	49.4

NOTES:

For weight calibration, we use the procedure "Comparaison individuelle" PDL-09-MG-001 and the procedure "Détermination des incertitudes" PDL-09-MG-002. This certificate cannot be copied without written approval from Dispersion Laboratory. The results presented in these pages relate only to objects subjected to calibration.n

REMARKS:

March 2022

TRANSCAT
Trust in every measure

ACCREDITATION ISO 17025
SCC Scope Number 668

CALIBRATION CERTIFICATE

9800 Chemin de la Côte-de-Liesse, Montréal, QC H8T 1A1
www.dispersion.ca 1.866.300.5066

Client :	Polytetra	**Certificate Number :**	157-77C663-222
Address :	695 E rue Gaudette	**CCN Accreditation # :**	668
	Saint-Jean-sur-Richelieu, QC	**CLAS Certification # :**	2010-01
	J3B7J7	**Precision class :**	NIST F
		Calibration date :	04-03-2022
Mass :	10 kg	**Follow-up date :**	04-03-2026

CALIBRATION RESULTS, CONVENTIONAL MASS:

Nominal Mass	Serie #	Inventory #	Conventional mass	Conventional mass after adjustment	Tolerance ± (mg)	Uncertainties ± (mg)
10 kg	D400/D532	EM205	9.999505 kg		1 000 mg	10 mg

TRANSCAT

Trust in every measure

ACCREDITATION ISO 17025

SCC Scope Number 668

CALIBRATION CERTIFICATE

9900 Chemin de la Côte-de-Liesse, Montréal, QC H8T 1A1
www.dispersion.ca 1.866.390.5005

Client :	Polytests	**Certificate Number :**	**157-77C603-222**
Address :	695 B rue Gaudette	**CCN Accreditation # :**	668
	Saint-Jean-sur-Richelieu, QC	**CLAS Certification # :**	2010-01
	J3B7S7	**Precision class :**	NIST F
		Calibration date :	04-03-2022
Mass :	10 kg	**Follow-up date :**	04-03-2026

CALIBRATION RESULTS, CORRECTIONS:

Nominal Mass	Serial #	Inventory #	Conventional mass Corrections	Conventional mass Corrections after adjustment	Tolerance ± (mg)	Uncertainties ± (mg)
10 kg	DI09D532		-62 mg		1 000 mg	10 mg

CALIBRATION CERTIFICATE

9800 Chemin de la Côte-de-Liesse, Montréal, QC H8T 1A1
www.dispersion.ca 1.866.390.5065

BALANCES

The following balances are used for calibration purposes :

> 5 kg to 25 kg :	Mettler Toledo XP32003L, SNR 1123271214, max. 32100 g, d = 0.005 g
> 1 kg to 5 kg	Mettler Toledo PR5003, SNR 1115311634, max. 5100 g, d = 0.001 g
> 300 g to 2 kg :	Mettler Toledo XP2004S, SNR B131185222, max. 2100 g, d = 0.1 mg
> 100 g to 200 g :	Mettler Toledo AT201 SNR BA1115230146, max. 205 g, d = 0.01 mg
> 5 g to 100 g :	Mettler Toledo AX106 SNR 1127063924, max. 111 g, d = 1 µg
1 mg to 5 g :	Mettler UMX5, SNR 1121103055, max. 5.1 g, d = 0.1 µg

We are also using these balances in our automated procedure :

> 200 g to 1 kg :	Mettler Toledo AX1005 SNR 1127063210, max. 1109 g, d = 0.01 mg
> 5 g to 100 g :	Mettler Toledo AX106 SNR 1120143015, max. 111 g, d = 1 µg
1 mg to 5 g :	Mettler UMX5, SNR 1125140581, max. 5.1 g, d = 0.1 µg

Our balances are periodically verified, according to our PDL-11-MG-001 control procedure.

UNCERTAINTIES:

The following uncertainties exist :

1. *Uncertainty associated with the weighting process.*
2. *Uncertainty associated with air density.*
3. *Uncertainty associated with the measurement standard.*
4. *Uncertainty associated with the density of the mass being calibrated.*

The uncertainty of the weighing process includes long-term reproducibility.

Uncertainties specified in this report are expanded uncertainties representing a confidence level of approximately 95% obtained by multiplying the combined standard uncertainty by a coverage factor of k = 2. For more detailed information refer to the GUM (Guide to the Expression of Uncertainty in Measurement, 1995 Edition)

TRACEABILITY

The Calibration Laboratory Assessment Service (CLAS) of the National Research Council of Canada (NRC) has assessed and certified specific calibration capabilities of this laboratory and their traceability to recognized national measurement standards and to the International System of Units (SI). This certificate of calibration is issued in accordance with the conditions of certification granted by CLAS and the conditions of accreditation granted by the Standards Council of Canada (SCC). Neither the CLAS nor the SCC guarantees the accuracy of individual calibration by accredited laboratories.

TRANSCAT

Trust in every measure

ACCREDITATION ISO 17025

SCC Scope Number 668

CALIBRATION CERTIFICATE

9900 Chemin de la Côte-de-Liesse, Montréal, QC H8T 1A1
www.dispersion.ca 1.866.390.5065

USED REFERENCES

Item	Serial #	Manufacturer	Calibration date	Due date
300g Labo	96-0888-50-2	Denver Instrument Company	01-10-2020	31-03-2022
1kg-1mg Labo	MT-01	Mettler Toledo	01-10-2020	31-03-2022
2kg Labo	96-0888-50-3	Denver Instrument Company	01-10-2020	31-03-2022
1kg Labo	96-0888-50-1	Denver Instrument Company	01-10-2020	31-03-2022
5kg Labo	129099	Mettler Toledo	01-10-2020	31-03-2022
10kg Labo	DI000G991	Dispersion	23-03-2021	31-03-2022
20kg Labo	69976	Mettler Toledo	06-10-2021	31-10-2022
1 mg-10kg	4000028011	Troemner	15-10-2021	31-10-2022
2kg Labo	129098	Mettler Toledo	01-10-2020	31-03-2022

ENVIRONMENTAL CONDITIONS

Item	Serial #	Manufacturer	Calibration date	Due date
THE004	107080	Control Company	04-03-2021	31-03-2022

Instrumentation Saint-Laurent Inc.
Certified ISO 17025

CLAS 2010-02

89 rue de la montagne
St-Joseph du lac
(Québec), J0N 1N0
Phone: (450) 473-6169
Fax: (450) 473-6207
info@instrumentationsaintlaurent.com

CALIBRATION CERTIFICATE

CERTIFICATE #	CE-EM-224 2023-05-11

CLIENT	
Company:	Services Polytests Inc
Address:	695 B rue Gaudette
	St-Jean-sur-Richelieu, Québec, J3B 7S7

CALIBRATION SPECIFICATION	
Service Procedure:	ISL-022
Required Accuracy:	+/- 1/32"
Calibration Frequency:(days)	365

INSTRUMENT SPECIFICATION			
Instrument Type:	Ruban à mesurer	Input Type:	Mesure
Manufacturer:	Stanley	Output Type:	N/A
Model #:	Leverlock 12'	Measurement Type:	Inch
Serial #:	N/A	Range:	0 à 12'
Location:	Portable	Version:	Machine: N/A

CALIBRATORS SPECIFICATION			
Calibrator:	tape a mesurer	Certification #:	TB-13358500
Serial #:	23038922	Certification Date:	2023-01-19
Certified by:	Starrett	Next Certification:	2024-01-19
Comments:			

Copyright of this certificate belongs to Inst. St-Laurent Inc. and must be reproduced in full, unless a written permission of Inst. St-Laurent Inc.

Instrumentation Saint-Laurent Inc.
Certified ISO 17025

CLAS NRC·CNRC CLAS 2018-02

SCC Accredited Lab

80 rue de la montagne
St-Joseph du lac
(Québec) J0N 1M0
Phone: (450) 473-6188
Fax: (450) 473-5207
info@instrumentationsaintlaurent.com

CALIBRATION CERTIFICATE

CERTIFICATE #	CE-EM-224 2023-05-11

CALIBRATION RESULTS

Entry Source	Given Value	Actual Value	Deviation Error	After Calib Value	Accuracy	Uncertainty
Conformity	Comment					
1.00 "	1.00 "	1.00 "	0.00 "	1.00 "	+/- 1/32 "	_ "
Compliant						
36.00 "	36.00 "	36.00 "	0.00 "	36.00 "	+/- 1/32 "	_ "
Compliant						
72.00 "	72.00 "	72.00 "	0.00 "	72.00 "	+/- 1/32 "	_ "
Compliant						
108.00 "	108.00 "	108.00 "	0.00 "	108.00 "	+/- 1/32 "	_ "
Compliant						
132.00 "	132.00 "	132.00 "	0.00 "	132.00 "	+/- 1/32 "	_ "
Compliant						

Environmental Conditions: Temperature: 21 °C Humidity: 30 %RH

Comments:

CALIBRATION DATE/ISSUANCE OF CERTIFICATE	
Calibration Date:	2023-05-11
Next Calibration:	2024-05-11
Certificate Date:	2023-05-11

CALIBRATION CONFORMITY	Before	After
Compliant:	X	X
Non Compliant:		

- Instrumentation St. Laurent Inc. Certify that the above instrument, meets or exceeds the specifications established by the manufacturer. The company's quality system complies with the requirements of ISO 17025 :2017 and the standards used to perform the calibration is traceable to NRC and / or NIST.
- Reported uncertainties represent a 95 % of confidence level assuming a normal distribution k=2.
- The declaration of conformity does not include Instrumentation St-Laurent Inc. uncertainty measurement. Decision rule is based on binary statement for simple acceptance rule against ILAC G8 standard and test tolerance limits are based on customer specifications, unless otherwise specified.
- The results presented in this certificate relate only to objects subject to calibration.
- It is the customer's responsability to ensure that calibrated equipment meets its intended use.
- The date format used in this certificate is: YYYY-MM-DD.

Assessment Service Calibration Laboratory (ASCL) of the National Research Council of Canada (NRC) has assessed and certified calibration laboratory's ability and traceability to the International System of Units (SI) or to standards acceptable according to ASCL. This calibration certificate is issued in accordance with the terms of ASCL certification and accreditation requirements of the Standards Council of Canada (SCC). SCC accreditation number: # 668. ASCL and SCC does not guarantee the accuracy of individual calibrations by accredited laboratories.

Marc Gingras - Technician

May 17th 2023

Version 1

Copyright of this certificate belongs to Inst. St-Laurent Inc. and must be reproduced in full, unless a written permission of Inst. St-Laurent Inc.

Instrumentation Saint-Laurent Inc.
Certified ISO 17025

80 rue de la montagne
St-Joseph du lac
(Québec), J0N 1M0
Phone: (450) 473-5160
Fax: (450) 473-5207
info@instrumentationsaintlaurent.com

CALIBRATION CERTIFICATE

CERTIFICATE #	CE-EM-249 2023-05-11

CLIENT	
Company:	Services Polytests Inc
Address:	695 B rue Gaudette
	St-Jean-sur-Richelieu, Québec, J3B 7S7

CALIBRATION SPECIFICATION	
Service Procedure:	4IN9106
Required Accuracy:	+/- 0.25 "H2O
Calibration Frequency:(days)	365

INSTRUMENT SPECIFICATION			
Instrument Type:	Indicator	Input Type:	Pression
Manufacturer:	Dwyer	Output Type:	Voltage
Model #:	MS-321-LCD	Measurement Type:	Pressure
Serial #:	N/A	Range:	0 à 0.10 "H2O
Location:	Banc de test	Version:	Machine: N/A

CALIBRATORS SPECIFICATION			
Calibrator:	Crystal XP2i 300	Certification #:	2022006892
Serial #:	258139	Certification Date:	2022-09-09
Certified by:	Alpha Controls	Next Certification:	2023-09-09
Comments:			
Calibrator:	Fluke 744	Certification #:	2023003233
Serial #:	8180008	Certification Date:	2023-04-26
Certified by:	Alpha Controls	Next Certification:	2024-04-26
Comments:			

Copyright of the certificate belongs to Inst. St-Laurent Inc. and must be reproduced in full, unless a written permission of Inst. St-Laurent Inc.

Instrumentation Saint-Laurent Inc.
Certified ISO 17025

CLAS 2010-02

80 rue de la montagne
St-Joseph du lac
(Québec), J0N 1M0
Phone: (450) 473-6169
Fax: (450) 473-6207
info@instrumentationsaintlaurent.com

CALIBRATION CERTIFICATE

CERTIFICATE #:	CE-EM-249 2023-05-11

CALIBRATION RESULTS

Entry Source	Given Value	Actual Value	Deviation Error	After Calib Value	Accuracy	Uncertainty
Conformity	Comment					
0.0000 "H2O	0.0000 "H2O	0.0000 "H2O	0.0000 "H2O	0.0000 "H2O	+\- 0.25 "H2O	± 0.10 "H2O
Compliant	Verification of the indicator					
0.0250 "H2O	0.0250 "H2O	0.0239 "H2O	-0.0011 "H2O	0.0239 "H2O	+\- 0.25 "H2O	± 0.10 "H2O
Compliant	Verification of the indicator					
0.0500 "H2O	0.0500 "H2O	0.0485 "H2O	-0.0015 "H2O	0.0485 "H2O	+\- 0.25 "H2O	± 0.10 "H2O
Compliant	Verification of the indicator					
0.0750 "H2O	0.0750 "H2O	0.0732 "H2O	-0.0068 "H2O	0.0732 "H2O	+\- 0.25 "H2O	± 0.10 "H2O
Compliant	Verification of the indicator					
0.1000 "H2O	0.1000 "H2O	0.09575 "H2O	-0.0025 "H2O	0.09575 "H2O	+\- 0.25 "H2O	± 0.10 "H2O
Compliant	Verification of the indicator					
0.0750 "H2O	0.0750 "H2O	0.0735 "H2O	-0.0065 "H2O	0.0735 "H2O	+\- 0.25 "H2O	± 0.10 "H2O
Compliant	Verification of the indicator					
0.0500 "H2O	0.0500 "H2O	0.0482 "H2O	-0.0018 "H2O	0.0482 "H2O	+\- 0.25 "H2O	± 0.10 "H2O
Compliant	Verification of the indicator					
0.0250 "H2O	0.0250 "H2O	0.0236 "H2O	-0.0014 "H2O	0.0236 "H2O	+\- 0.25 "H2O	± 0.10 "H2O
Compliant	Verification of the indicator					
0.0000 "H2O	0.0000 "H2O	0.0000 "H2O	0.0000 "H2O	0.0000 "H2O	+\- 0.25 "H2O	± 0.10 "H2O
Compliant	Verification of the indicator					
0.0000 "H2O	0.0000 V.DC.	0.0021 V.DC.	+0.0021 V.DC.	0.0021 V.DC.	+\- 0.5 V.DC.	0.5 V.DC.
Compliant	Verification of the analogic output					
0.0250 "H2O	2.5000 V.DC.	2.4048 V.DC.	-0.1852 V.DC.	2.4048 V.DC.	+\- 0.5 V.DC.	0.5 V.DC.
Compliant	Verification of the analogic output					
0.0500 "H2O	5.0000 V.DC.	4.8450 V.DC.	-0.1550 V.DC.	4.8450 V.DC.	+\- 0.5 V.DC.	0.5 V.DC.
Compliant	Verification of the analogic output					
0.0750 "H2O	7.5000 V.DC.	7.3538 V.DC.	-0.1462 V.DC.	7.3538 V.DC.	+\- 0.5 V.DC.	0.5 V.DC.
Compliant	Verification of the analogic output					
0.1000 "H2O	10.0000 V.DC.	9.7318 V.DC.	-0.2682 V.DC.	9.7318 V.DC.	+\- 0.5 V.DC.	0.5 V.DC.
Compliant	Verification of the analogic output					
0.0750 "H2O	0.00 V.DC.	7.3535 V.DC.	-0.1465 V.DC.	7.3535 V.DC.	+\- 0.5 V.DC.	0.5 V.DC.
Compliant	Verification of the analogic output					
0.0500 "H2O	0.00 V.DC.	4.8453 V.DC.	-0.1547 V.DC.	4.8453 V.DC.	+\- 0.5 V.DC.	0.5 V.DC.
Compliant	Verification of the analogic output					
0.0250 "H2O	0.00 V.DC.	2.4051 V.DC.	-0.1849 V.DC.	2.4051 V.DC.	+\- 0.5 V.DC.	0.5 V.DC.
Compliant	Verification of the analogic output					
0.0000 "H2O	0.00 V.DC.	0.0021 V.DC.	+0.0021 V.DC.	0.00 V.DC.	+\- 0.5 V.DC.	0.5 V.DC.
Compliant	Verification of the analogic output					

Environmental Conditions: Temperature: 21 °C Humidity: 30 %RH

Comments:

Version 1

Copyright of this certificate belongs to Inst. St-Laurent Inc. and must be reproduced in full, unless a written permission of Inst. St-Laurent Inc.

Instrumentation Saint•Laurent Inc.
Certified ISO 17025

CLAS NRC·CNRC
CLAS 2013-02

SCC Accredited LAB
LAB
N°608

80 rue de la montagne
St-Joseph du lac
(Québec), J0N 1M0
Phone: (450) 473-6169
Fax: (450) 473-5207
info@instrumentationsaintlaurent.com

CALIBRATION CERTIFICATE

CERTIFICATE #	CE-EM-249 2023-05-11

CALIBRATION DATE/ISSUANCE OF CERTIFICATE	
Calibration Date:	2023-05-11
Next Calibration:	2024-05-11
Certificate Date:	2023-05-11

CALIBRATION CONFORMITY	Before	After
Compliant:	X	X
Non Compliant:		

* Instrumentation St. Laurent Inc. Certify that the above instrument, meets or exceeds the specifications established by the manufacturer. The company's quality system complies with the requirements of ISO 17025 :2017 and the standards used to perform the calibration is traceable to NRC and / or NIST.
* Reported uncertainties represent a 95 % of confidence level assuming a normal distribution k=2.
* The declaration of conformity does not include Instrumentation St-Laurent Inc. uncertainty measurement. Decision rule is based on binary statement for simple acceptance rule against ILAC G8 standard and test tolerance limits are based on customer specifications, unless otherwise specified.
* The results presented in this certificate relate only to objects subject to calibration.
* It is the customer's responsibility to ensure that calibrated equipment meets its intended use.
* The date format used in this certificate is: YYYY-MM-DD.

Assessment Service Calibration Laboratory (ASCL) of the National Research Council of Canada (NRC) has assessed and certified calibration laboratory's ability and traceability to the International System of Units (SI) or to standards acceptable according to ASCL. This calibration certificate is issued in accordance with the terms of ASCL certification and accreditation requirements of the Standards Council of Canada (SCC). SCC accreditation number: # 669. ASCL and SCC does not guarantee the accuracy of individual calibrations by accredited laboratories.

Marc Gingras - Technician

May 17th 2023

5F09106 Version 1

Copyright of this certificate belongs to Inst. St-Laurent Inc. and must be reproduced in full, unless a written permission of Inst. St-Laurent Inc.

Instrumentation Saint-Laurent Inc.
Certified ISO 17025

CLAS
ARC-GARC
CLAS 2010-02

80 rue de la montagne
St-Joseph du lac
(Québec), J0N 1M0
Phone: (450) 473-6160
Fax: (450) 473-5207
info@instrumentationsaintlaurent.com

CALIBRATION CERTIFICATE

CERTIFICATE #	CE-EM-313 2023-05-11

CLIENT	
Company:	Services Polytests Inc
Address:	695 B rue Gaudette
	St-Jean-sur-Richelieu, Québec, J3B 7S7

CALIBRATION SPECIFICATION	
Service Procedure:	4IN9106
Required Accuracy:	+/- 0.25"H2O
Calibration Frequency:(days)	365

INSTRUMENT SPECIFICATION			
Instrument Type:	Indicator	Input Type:	Pression
Manufacturer:	Dwyer	Output Type:	Voltage
Model #:	MS-321-LCD	Measurement Type:	Pressure
Serial #:	N.A.	Range:	0 a 0.1 inchh20
Location:	N.A.	Version:	Machine: N.A.

CALIBRATORS SPECIFICATION			
Calibrator:	Crystal XP2i 300	Certification #:	20220068992
Serial #:	258139	Certification Date:	2022-09-09
Certified by:	Alpha Controls	Next Certification:	2023-09-09
Comments:			
Calibrator:	Fluke 744	Certification #:	2023003233
Serial #:	8160008	Certification Date:	2023-04-26
Certified by:	Alpha Controls	Next Certification:	2024-04-26
Comments:			

Copyright of this certificate belongs to Inst. St-Laurent Inc. and must be reproduced in full, unless a written permission of Inst. St-Laurent Inc.

Instrumentation Saint-Laurent Inc.
Certified ISO 17025

80 rue de la montagne
St-Joseph du lac
(Québec), J0N 1M0
Phone: (450) 473-6180
Fax: (450) 473-5307
info@instrumentationsaintlaurent.com

CALIBRATION CERTIFICATE

CERTIFICATE #	CE-EM-313 2023-05-11

CALIBRATION RESULTS

Entry Source	Given Value	Actual Value	Deviation Error	After Calib Value	Accuracy	Uncertainty
Conformity	Comment					
0.0000 "H2O	0.0000 "H2O	-0.0005 "H2O	-0.0005 "H2O	-0.0005 "H2O	+\- 0.25 "H2O	± 0.10 "H2O
Compliant	Verification of the indicator					
0.0250 "H2O	0.0250 "H2O	0.0225 "H2O	-0.0025 "H2O	0.0225 "H2O	+\- 0.25 "H2O	± 0.10 "H2O
Compliant	Verification of the indicator					
0.0500 "H2O	0.0500 "H2O	0.0475 "H2O	-0.0125 "H2O	0.0475 "H2O	+\- 0.25 "H2O	± 0.10 "H2O
Compliant	Verification of the indicator					
0.0750 "H2O	0.0750 "H2O	0.0712 "H2O	-0.0038 "H2O	0.0712 "H2O	+\- 0.25 "H2O	± 0.10 "H2O
Compliant	Verification of the indicator					
0.1000 "H2O	0.1000 "H2O	0.0980 "H2O	-0.0020 "H2O	0.0980 "H2O	+\- 0.25 "H2O	± 0.10 "H2O
Compliant	Verification of the indicator					
0.0750 "H2O	0.0750 "H2O	0.0715 "H2O	-0.0035 "H2O	0.0715 "H2O	+\- 0.25 "H2O	± 0.10 "H2O
Compliant	Verification of the indicator					
0.0500 "H2O	0.0500 "H2O	0.0473 "H2O	-0.0127 "H2O	0.0473 "H2O	+\- 0.25 "H2O	± 0.10 "H2O
Compliant	Verification of the indicator					
0.0250 "H2O	0.0250 "H2O	0.0228 "H2O	-0.0022 "H2O	0.0228 "H2O	+\- 0.25 "H2O	± 0.10 "H2O
Compliant	Verification of the indicator					
0.0000 "H2O	0.0000 "H2O	-0.0004 "H2O	-0.0004 "H2O	-0.0004 "H2O	+\- 0.25 "H2O	± 0.10 "H2O
Compliant	Verification of the indicator					
0.0000 "H2O	0.0000 V.DC.	0.0054 V.DC.	+0.0054 V.DC.	0.0054 V.DC.	+\- 0.5 V.DC.	0.5 V.DC.
Compliant	Verification of the analogic output					
0.0250 "H2O	2.5000 V.DC.	2.4534 V.DC.	-0.0466 V.DC.	2.4534 V.DC.	+\- 0.5 V.DC.	0.5 V.DC.
Compliant	Verification of the analogic output					
0.0500 "H2O	5.0000 V.DC.	4.8196 V.DC.	-0.1804 V.DC.	4.8196 V.DC.	+\- 0.5 V.DC.	0.5 V.DC.
Compliant	Verification of the analogic output					
0.0750 "H2O	7.5000 V.DC.	7.0051 V.DC.	+0.0051 V.DC.	7.0051 V.DC.	+\- 0.5 V.DC.	0.5 V.DC.
Compliant	Verification of the analogic output					
0.1000 "H2O	10.0000 V.DC.	10.1084 V.DC.	+0.1084 V.DC.	10.1084 V.DC.	+\- 0.5 V.DC.	0.5 V.DC.
Compliant	Verification of the analogic output					
0.0750 "H2O	0.00 V.DC.	7.0050 V.DC.	+0.0050 V.DC.	7.0050 V.DC.	+\- 0.5 V.DC.	0.5 V.DC.
Compliant	Verification of the analogic output					
0.0500 "H2O	0.00 V.DC.	4.8193 V.DC.	-0.1807 V.DC.	4.8193 V.DC.	+\- 0.5 V.DC.	0.5 V.DC.
Compliant	Verification of the analogic output					
0.0250 "H2O	0.00 V.DC.	2.4536 V.DC.	-0.0464 V.DC.	2.4536 V.DC.	+\- 0.5 V.DC.	0.5 V.DC.
Compliant	Verification of the analogic output					
0.0000 "H2O	0.00 V.DC.	0.0056 V.DC.	+0.0056 V.DC.	0.0056 V.DC.	+\- 0.5 V.DC.	0.5 V.DC.
Compliant	Verification of the analogic output					

Environmental Conditions:	Temperature: 21 °C	Humidity: 30 %RH
Comments:		

Version 1

Copyright of this certificate belongs to Inst. St-Laurent Inc. and must be reproduced in full, unless a written permission of Inst. St-Laurent Inc.

Instrumentation Saint•Laurent inc.
Certified ISO 17025

CLAS NRC·CNRC
CLAS 2010-02

SCC Accredited LAB
LAB Accredited CCN
N° 6608

80 rue de la montagne
St-Joseph du lac
(Québec), J0N 1M0
Phone: (450) 473-6100
Fax: (450) 473-5207
info@instrumentationsaintlaurent.com

CALIBRATION CERTIFICATE

CERTIFICATE #	CE-EM-313 2023-05-11

CALIBRATION DATE/ISSUANCE OF CERTIFICATE	
Calibration Date:	2023-05-11
Next Calibration:	2024-05-11
Certificate Date:	2023-05-11

CALIBRATION CONFORMITY	Before	After
Compliant:	X	X
Non Compliant:		

- Instrumentation St. Laurent Inc. Certify that the above instrument, meets or exceeds the specifications established by the manufacturer. The company's quality system complies with the requirements of ISO 17025 :2017 and the standards used to perform the calibration is traceable to NRC and / or NIST.
- Reported uncertainties represent a 95 % of confidence level assuming a normal distribution k=2.
- The declaration of conformity does not include Instrumentation St-Laurent Inc. uncertainty measurement. Decision rule is based on binary statement for simple acceptance rule against ILAC G8 standard and test tolerance limits are based on customer specifications, unless otherwise specified.
- The results presented in this certificate relate only to objects subject to calibration.
- It is the customer's responsibility to ensure that calibrated equipment meets its intended use.
- The date format used in this certificate is: YYYY-MM-DD.

Assessment Service Calibration Laboratory (ASCL) of the National Research Council of Canada (NRC) has assessed and certified calibration laboratory's ability and traceability to the International System of Units (SI) or to standards acceptable according to ASCL. This calibration certificate is issued in accordance with the terms of ASCL certification and accreditation requirements of the Standards Council of Canada (SCC). SCC accreditation number: # 669. ASCL and SCC does not guarantee the accuracy of individual calibrations by accredited laboratories.

Marc Gingras - Technician

May 17th 2023

5F09106 Version 1

Copyright of this certificate belongs to Inst. St-Laurent Inc. and must be reproduced in full, unless a written permission of Inst. St-Laurent Inc.

POLYCONTROLS

CLAS 2009-02

CALIBRATION CERTIFICATE # 19904

Calibration date : 2023-06-28
Certificate issued : 2023-06-28

Services Polytests
695 B Gaudette street
St-Jean-sur-Richelieu, Québec, Canada
J3B 7S7

Calibration of
Positive displacement flow meter Shimigawa DCSDn-2C S/N : S8020

QUALITY PROGRAM CONFORMANCE

All calibrations are performed in accordance with Polycontrols Laboratory Quality Assurance Manual and conform to ISO/IEC 17025: 2017, ISO 9001 – 2015 and/or other quality requirements defined in customers purchase descriptions. The results are strictly valid for the device under test or calibration. If applicable, the decision rule is described in the certificate.

TRACEABILITY

The traceability for flow standard to the National Institute of Standards and Technology, NIST, is maintained by Fluke Corporation of Phoenix, Arizona and conform to ISO/IEC 17025, ANSI/NCSL Z540-1-1994, ISO-10012-1 and MIL-STD 45662A.

The Calibration Laboratory Assessment Service (CLAS) of the National Research Council of Canada (NRC) has assessed and certified specific calibration capabilities of this laboratory and traceability to the International System of Units (SI) or to standards acceptable to the CLAS program. This certificate of calibration is issued in accordance with the conditions of certification granted by CLAS and the conditions of accreditation granted by the Standards Council of Canada (SCC). Neither CLAS nor SCC guarantee the accuracy of individual calibrations by accredited laboratories.

CALIBRATION OF MEASURING AND TEST EQUIPMENT

For calibration measurement capability, please refer to the Canadian Calibration Network web page at the National Research Council of Canada. This laboratory is accredited by the Standards Council of Canada as part of the Calibration Laboratory Assessment Service (CLAS) program and is listed at nrc.canada.ca.

This document forms part of the Certificate of Accreditation issued by the Standards Council of Canada (SCC). The original version is available in the Directory of Accredited Laboratories on the SCC website at www.scc.ca.

CONDITION SUMMARY OF THE DEVICE UNDER TEST

Initial conditions	In good condition
Work done	Calibration of the instrument
	Initial readings = Final readings, no adjustment
Results	Final readings in tolerance
Remarks	Calibration frequency every 6 months
	Tolerance modified per end user request

B Poirier

Bernard Poirier
Metrologist

Laboratory Manager

©2023 Polycontrols • This calibration document shall not be reproduced except in full, without written approval of Polycontrols inc.
3650, Matte blvd. (Unit A-1), Brossard (Quebec), Canada, J4Y 2Z2
Tel: (450) 444-3680 Fax: (450) 444-1088 www.polycontrols.com

POLYCONTROLS

CLAS 2009-02

Calibration certificate # 19904			
Serial Number:	S8020	Test stand:	3
Calibration Date:	2023-06-28	Procedure:	POS-CAL-005
Instrument ID:	EM 318	Decision rule:	Method #3

Standard equipment used for final calibration

Description	Model	Serial #	Traceability	Due date
Fluke molbloc_120 slpm	2E2-S	237	1500349857	2024-03-02
Fluke molbloc_30 slpm	3E4-VCR-V-Q	2359	1500349861	2024-03-02
Fluke molbox1	Molbox1	881	1500341962	2023-10-18
RTD Mini	M22	2208101	2023003750	2024-05-17
Module 44.5 PSI avec Baro 163671	Module 30	160639	2023003753	2024-05-18

Final specifications of the device under test		Calibration conditions	
Gas	Air	Gas	Air
Operation temperature		Ambient temperature	22 °C
Inlet pressure		Ambient pressure	1004.19 mbar
Outlet pressure		Orientation	
Reference temperature		Seals	
Reference pressure		Valve	
Range	10-2000 ALH		
Input/Output Signals	-		
Supply			
Accuracy ±2 %O.R.			

Final readings

Test Flow ALH	Device under test L	Measured values Pressure PSIA	Temperature °C	Reference L	Calculated Reference L	Calculated Error L	Acceptable Error L	Uncertainty k = 2 L	TUR
362.2817	60.6400	14.572	21.93	59.6363	60.3118	0.3282	1.2062	0.2003	>4
1244.1189	208.4400	14.578	21.87	205.2985	207.4988	0.9412	4.1500	0.6891	>4
1946.0987	323.8400	14.588	21.97	320.6420	323.9609	-0.1209	6.4792	0.7956	>4

POLYCONTROLS

CLAS 2019-42

Calibration certificate # 19904

Serial Number:	S8020	Test stand:	3
Calibration Date:	2023-06-28	Procedure:	POS-CAL-005
Instrument ID:	EM 318	Decision rule:	Method #3

Final results

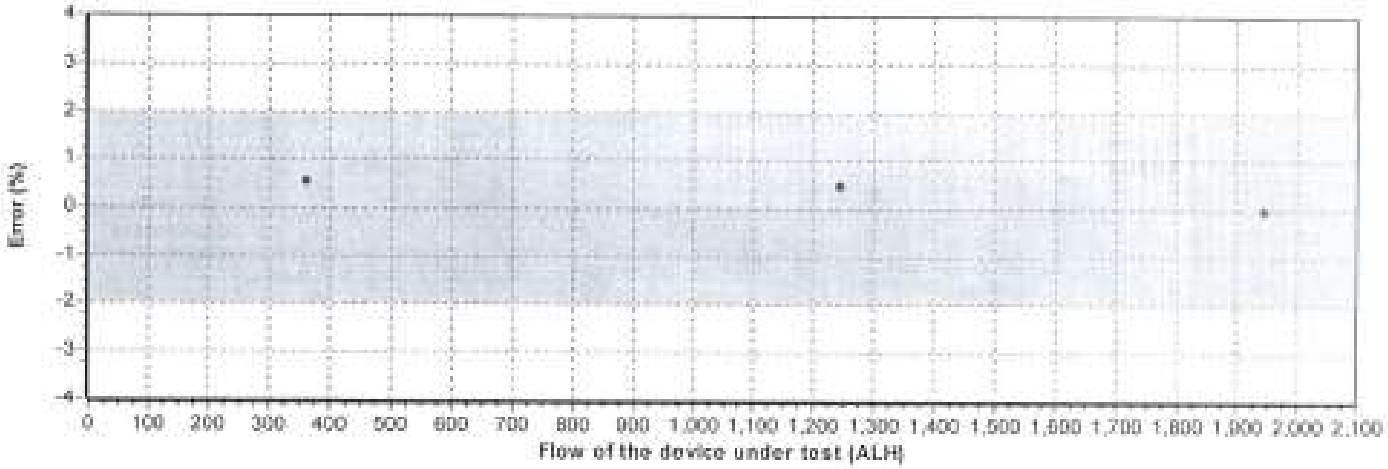

See the appendix for the guideline of decision rule

cal/fact. 0,994587

August, 31st 2023

Appendix for the decision rule

Method #3 Non-binary Statement with Guard Band, uncertainty directly taken into account

This decision rule uses a guard band to define the acceptance and rejection interval. The acceptance limit is defined by the following mathematical formula: AL = TL − w and the rejection limit RL = TL + w, where w = U. The multiple r that is multiplied by the expanded measurement uncertainty U can be defined following ILAC G8: 2019 table 1 section 5.2. The expanded measurement uncertainty U has a 95% coverage probability (k = 2). Non-binary statement with guard band exists when the result is limited to four choices: pass, conditional pass, conditional fail, and fail.

Statements of conformity are reported as:

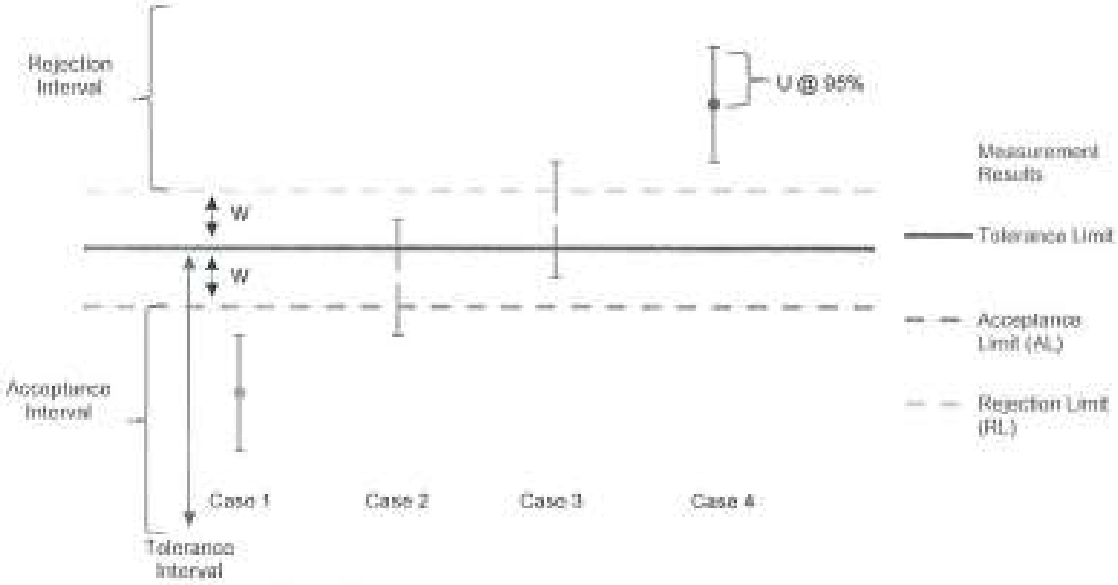

Graphical representation of a Non-Binary Statement with a Guard Band

Case 1 – Below acceptance limit AL

Status: In tolerance

- The result is inside the acceptance interval. However, assuming a normal distribution, the risk that the result is outside the tolerance limit could be up to 2.5%. Uncertainty is directly taken into account. *Green.*

Case 2 – Below tolerance limit TL, greater than acceptance limit AL

Status: In tolerance-Conditional

- The result is outside the acceptance interval but below tolerance limit. However, the observed value is inside the guard band w = TL – AL and the status is conditional on the customer's risk assessment. Uncertainty is directly taken into account. *Yellow.*

Case 3 – Greater than tolerance limit, below rejection limit RL

Status: Out of tolerance-Conditional

- Le result is greater than tolerance limit but outside the rejection interval. However, the observed value is inside the guard band w = TL – RL and the status is conditional on the customer's risk assessment. Uncertainty is directly taken into account. *Yellow.*

Case 4 – Greater than rejection limit RL

Status: Out of tolerance

- The result is inside the rejection interval. Uncertainty is directly taken into account. *Red.*

3650-A1, Matte Blvd., Brossard, (Quebec) J4Y 2Z2 Canada – CAN: (450) 444-3800 USA: 1-844-660-7659

GRAFTEL
An AMETEK Company

CERTIFICATE OF NIST TRACEABLE CALIBRATION

Calibration Certificate No: 104476

Customer Information

Customer: Services Polytests

Address: Services Polytests 695-B Gaudette St-Jean-sur-richelieu J3B 7S7

Customer PO #: 100580

ACCREDITED
CERT #582701

Calibration Procedure Information

Procedure ID: GTP AIRVEL | Revision #: 7 | Revision Date: 10/17/2016

Calibration Standards Information

Graftel ID	Model #	Description	CAL Due
10187	PTB210	Vaisala Ambient Pressure	5/1/2023
10100		Graftel Temperature	10/1/2025
10171	FC0332-2W	Furness DeltaP Meter, 0 to 0.4"H2O	5/1/2023
10086	FC0332	Furness Controls DeltaP Meter, 0 to 4"H2O	5/1/2023
1A01JMGKP36		Graftel Barometric Pressure, Tank Farm	6/14/2023
T1930469	VAISALA / H MW95D	Vaisala Temp/RH Logger, Velocity Lab	6/14/2023

Calibrated Device Information

Manufacturer: Testo | Description: Anemometer | Method Used: Pitot Tube

Model #: 405I | Rated Accuracy: See Attachments | Accuracy Specified By: Testo

Instrument ID: EM 332 | Range: 0 - 5900 fpm | Condition: Functional

Serial #: 46100640 | Calibration Date: 02/09/2023 | Calibration Due: 02/09/2024

Comments: Limited calibration range: 0-2000 fpm

The calibrations within this certificate/report are traceable through NIST or another National Metrology Institute to the International System of Units (SI). The reported calibration uncertainty has a confidence level of 95% (k=2). A calibration uncertainty ratio of 4:1 was maintained unless required uncertainty is supported by analysis. Graftel Quality Assurance System complies with applicable requirements of ISO/IEC-17025-2017, ANSI/NCSL Z540-1-1994 and ISO 9001. All results contained within this certificate relate only to item(s) calibrated. This certificate shall not be reproduced except in full and with the written consent of Graftel. Acceptance Criteria per Simple Acceptance Rule: Measurement Uncertainty is not applied to the measured value when in/out of tolerance statement is made.

Performed By: Date: 02/09/2023

Philip Davis
Calibration Technician

Approved By: Date: 02/14/2023

Joselito Zosa
Lab Manager

95 Chancellor Drive | Roselle, Illinois 60172 | +1 (847) 364-2600 | Graftel.com

ATTACHMENT TO CALIBRATION CERTIFICATE 104476
AS FOUND / AS LEFT DATA

Reading From Standard,	Lower Limit of Meter Reading,	Measured Reading From Meter,	Upper Limit of Meter Reading,	Error,	Measurement Uncertainty (k=2)	CMC (k=2)	STATUS
Standard Air Velocity, Pstd= 14.7psia, Tstd= 77°F							
fpm	fpm	fpm	fpm	fpm	fpm	fpm	STATUS
117	91	120	143	3	4	3	Pass
454	372	433	536	-21	8	8	Pass
984	876	921	1092	-63	15	15	Pass
2039	1878	1891	2200	-148	28	28	Pass
Temperature							
°F	°F	°F	°F	°F	°F	°F	STATUS
70.58	69.68	70.7	71.46	0.12	0.077	0.05	Pass

ERROR CHART

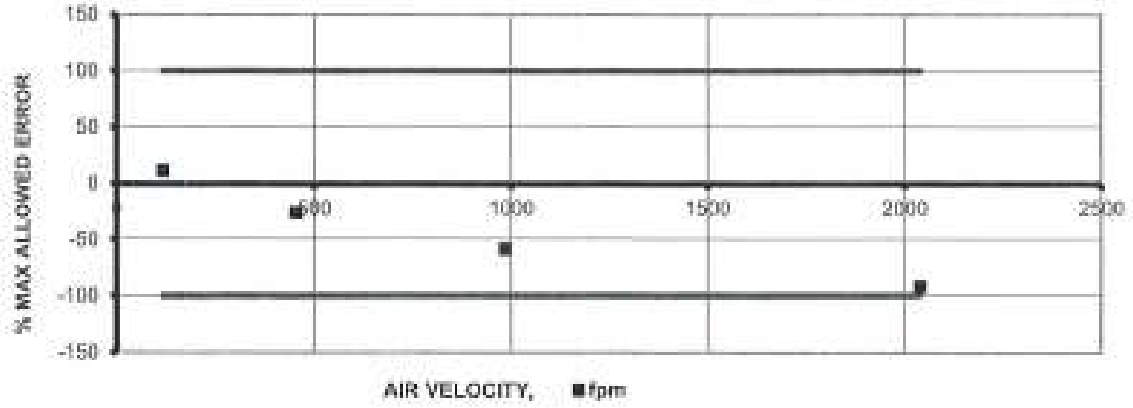

Instrument Specifications		
Test Fluid:	Air	
Lower Velocity Range:	0	fpm
Upper Velocity Range:	5900	fpm
Velocity Resolution:	1	
Velocity Accuracy:	5% RDG + 20 fpm (0-394 fpm), 5% RDG + 59 fpm (394 to + 2953 fpm)	
Lower Temperature Range:	-4	°F
Upper Temperature Range:	140	°F
Temperature Resolution:	0.1	
Temperature Accuracy:	0.9	°F Difference
Laboratory Ambient Conditions		
Pressure:	14.34	psia
Humidity:	26.01	%RH
Temperature:	70.77	°F

Trescal

[CALIBRATION SOLUTIONS TO IMPROVE YOUR PERFORMANCE]
[LA MÉTROLOGIE AU SERVICE DE VOTRE PERFORMANCE]

[illegible]

Certificat d'Étalonnage / Certificate of Calibration

CLIENT :
SERVICES POLYTESTS INC.
695-B GAUDETTE
ST-JEAN-SUR-RICHELIEU, QC J3B7S7

Description: VÉRIFICATEUR D'HUMIDITÉ / MOISTURE METER
Fabricant/ Manufacturer: DELMHORST
Modèle/ Model : MCS-1
No série / Serial no : N/A
Inventaire / Asset # : EM 334

CERTIFICAT No / Certificate No: 380876

PROCÉDURE / Procedure :
TRESCAL - DELMHORST_MCS-1

Date étalonnage/ Calibration Performed : 2023-01-13

Echéance/ Due Date : 2024-01-13

Type de résultat / *Results type* : As-Found = As-Left

Résultats d'essais / *Test results* : Conforme / In Tolerance

Conditions de mesure / Measurement conditions

TEMPÉRATURE / Temp. : 22.4°C

HUMIDITÉ / Humidity : 29% RH

Usage restreint/ *Restricted use* : ☐

Réparation effectuée / *Repair performed* : ☐

Ajustement effectué / *Adjustment performed* : ☐

ÉTALONS UTILISÉS/ Standards Used:

Identification	Manuf.	Model	Description	Ser. #	Étalonné/ Cal.	Échéance/ Due
PR0662	FLUKE	8508A	REFERENCE MULTIMETER	3892722B3	2021-01-04	2023-01-04

Les spécifications mentionnées comme limites de tolérances d'essai sont celles établies par le manufacturier, sauf indication contraire.
Test tolerance limits are based on manufacturers specifications unless stated otherwise.

NOTES :

2023-01-23

Technicien :
Technician
M. BARRAK

Le système qualité de la société est conforme aux exigences de la norme ISO 17025 et les étalons utilisés pour le processus d'étalonnage sont retraçables au SI par l'entremise du CNRC et/ou du NIST.
Our quality system complies with the requirements of ISO 17025 and the standards used for the calibration are traceable to SI through NRC and/or NIST.

[illegible]

Trescal

(CALIBRATION SOLUTIONS TO IMPROVE YOUR PERFORMANCE)
(LA MÉTROLOGIE AU SERVICE DE VOTRE PERFORMANCE)

Certificat d'Étalonnage
Certificate of Calibration

380876

CLIENT / Customer : SERVICES POLYTESTS INC.

DESCRIPTION / Description : VÉRIFICATEUR D'HUMIDITÉ / MOISTURE METER

MANUFACTURIER / Manufacturer : DELMHORST

MODÈLE / Model : MCS-1

DESCRIPTION Description		LIMITES Limits	LECTURES Readings	LIMITES Limits
DOUGLAS-FIR @ 80°F				
	Nominal			Déviation *Mohms*
12 %	120 MOhms		120.1	-0.1
22 %	1.10 MOhms		1.097	0.003

trescal.com

TRANSCAT

Trust in every measure

ACCREDITATION ISO 17025 SCC Scope Number 668

CALIBRATION CERTIFICATE

9900 Chemin de la Côte-de-Liesse, Montréal, QC H8T 1A1
www.dispersion.ca 1.866.390.5050

Client :	Polytests	**Certificate Number :**	**157-77C603-225**
Address :	695 B rue Gaudette Saint-Jean-sur-Richelieu, QC J3B7S7	**Calibration date :**	14-03-2022

Technician:
Coutu, Daniel

David Llorens, Quality Manager

SERVICE DESCRIPTION:

Masses description :	ASTM E617	**Date approved :**	14-03-2022
Precision class :	ASTM 1	**Next Calibration :**	14-03-2027
Density :	7.96g/cm³	**CCN accreditation # :**	668
Identification (if unique) :	DI000J378	**CLAS Certification # :**	2010-01

Test conditions :	Temp °C:	21.16	kPa Pressure:	100.64	Humidity:	47.97

NOTES:

For weight calibration, we use the procedure "Comparaison individuelle" PDL-09-MG-001 and the procedure "Détermination des incertitudes" PDL-09-MG-002. This certificate cannot be copied without written approval from Dispersion Laboratory. The results presented in these pages relate only to objects subjected to calibration.n

REMARKS:

March 2022

TRANSCAT®

Trust in every measure

ACCREDITATION ISO 17025

SCC Scope Number 666

CALIBRATION CERTIFICATE

9950 Chemin de la Côte-de-Liesse, Montréal, QC H8T 1A1
www.dlepersion.ca 1.866.390.5066

Client :	Polytests	**Certificate Number :**	**157-77C603-225**
Address :	695 E rue Gaudette	**CCN Accreditation # :**	666
	Saint-Jean-sur-Richelieu, QC	**CLAS Certification # :**	2010-01
	J3B7S7	**Precision class :**	ASTM 1
		Calibration date :	14-03-2022
Mass :	100 mg	**Follow-up date :**	14-03-2027

CALIBRATION RESULTS, CONVENTIONAL MASS:

Nominal Mass	Serie #	Inventory #	Conventional mass	Conventional mass after adjustment	Tolerance ± (mg)	Uncertainties ± (mg)
100mg	D1008J378	EM-535	99.9959 mg		0.010 mg	0.002 mg

TRANSCAT

Trust in every measure

ACCREDITATION ISO 17025

SCC Scope Number 668

CALIBRATION CERTIFICATE

9900 Chemin de la Côte-de-Liesse, Montréal, QC H8T 1A1
www.dispersion.ca 1.866.390.5050

Client :	Polylasta	**Certificate Number :**	**157-77C803-225**
Address :	695 B rue Gaudette	**CCN Accreditation # :**	668
	Saint-Jean-sur-Richelieu, QC	**CLAS Certification # :**	2010-01
	J3B7S7	**Precision class :**	ASTM 1
		Calibration date :	14-03-2022
Mass :	100 mg	**Follow-up date :**	14-03-2027

CALIBRATION RESULTS, CORRECTIONS:

Nominal Mass	Serial #	Inventory #	Conventional mass Corrections	Conventional mass Corrections after adjustment	Tolerance ± (mg)	Uncertainties ± (mg)
100mg	DH003378		-0.0001 mg		0.010 mg	0.002 mg

CALIBRATION CERTIFICATE

9900 Chemin de la Côte-de-Liesse, Montréal, QC H8T 1A1
www.dispersion.ca 1.866.390.5066

BALANCES

The following balances are used for calibration purposes :

> 5 kg to 25 kg :	Mettler Toledo XP32003L, SNR 1123271214, max. 32100 g, d = 0.005 g
> 1 kg to 5 kg	Mettler Toledo PR5003, SNR 1115311634, max. 5100 g, d = 0.001 g
> 300 g to 2 kg :	Mettler Toledo XP2004S, SNR B131185222, max. 2100 g, d = 0.1 mg
> 100 g to 200 g :	Mettler Toledo AT201 SNR BA1115230146, max. 205 g, d = 0.01 mg
> 5 g to 100 g :	Mettler Toledo AX106 SNR 1127063924, max. 111 g, d = 1 µg
1 mg to 5 g :	Mettler UMX5, SNR 1121103055, max. 5.1 g, d = 0.1 µg

We are also using these balances in our automated procedure :

> 200 g to 1 kg :	Mettler Toledo AX1005 SNR 1127063210, max. 1109 g, d = 0.01 mg
> 5 g to 100 g :	Mettler Toledo AX106 SNR 1120143015, max. 111 g, d = 1 µg
1 mg to 5 g :	Mettler UMX5, SNR 1125140561, max. 5.1 g, d = 0.1 µg

Our balances are periodically verified, according to our PDL-11-MG-001 control procedure.

UNCERTAINTIES:

The following uncertainties exist :

1. *Uncertainty associated with the weighting process.*
2. *Uncertainty associated with air density.*
3. *Uncertainty associated with the measurement standard.*
4. *Uncertainty associated with the density of the mass being calibrated.*

The uncertainty of the weighing process includes long-term reproducibility.

Uncertainties specified in this report are expanded uncertainties representing a confidence level of approximately 95% obtained by multiplying the combined standard uncertainty by a coverage factor of k = 2. For more detailed information refer to the GUM (Guide to the Expression of Uncertainty in Measurement, 1995 Edition)

TRACEABILITY

The Calibration Laboratory Assessment Service (CLAS) of the National Research Council of Canada (NRC) has assessed and certified specific calibration capabilities of this laboratory and their traceability to recognized national measurement standards and to the International System of Units (SI). This certificate of calibration is issued in accordance with the conditions of certification granted by CLAS and the conditions of accreditation granted by the Standards Council of Canada (SCC). Neither the CLAS nor the SCC guarantees the accuracy of individual calibration by accredited laboratories.

TRANSCAT
Trust in every measure

ACCREDITATION ISO 17025
SCC Scope Number 668

CALIBRATION CERTIFICATE

9600 Chemin de la Côte-de-Liesse, Montréal, QC H8T 1A1
www.dispersion.ca 1.866.390.5065

USED REFERENCES

Item	Serial #	Manufacturer	Calibration date	Due date
300g Labo	96-0888-50-2	Denver Instrument Company	01-10-2020	31-03-2022
1kg-1mg Labo	MT-01	Mettler Toledo	01-10-2020	31-03-2022
2kg Labo	96-0888-50-3	Denver Instrument Company	01-10-2020	31-03-2022
1kg Labo	96-088850-1	Denver Instrument Company	01-10-2020	31-03-2022
5kg Labo	129099	Mettler Toledo	01-10-2020	31-03-2022
10kg Labo	DI000G991	Dispersion	23-03-2021	31-03-2022
20kg Labo	69976	Mettler Toledo	06-10-2021	31-10-2022
1 mg-10kg	4000028011	Troemner	15-10-2021	31-10-2022
2kg Labo	129098	Mettler Toledo	01-10-2020	31-03-2022

ENVIRONMENTAL CONDITIONS

Item	Serial #	Manufacturer	Calibration date	Due date
THE004	107090	Control Company	04-03-2021	31-03-2022

Airgas
an Air Liquide company

Airgas Specialty Gases
Airgas USA LLC
6141 Easton Road
Plumsteadville, PA 18949
Airgas.com

CERTIFICATE OF ANALYSIS

Grade of Product: PRIMARY STANDARD

Customer:	AIR LIQUIDE CANADA		
Part Number:	X04NI77P15A0003	Reference Number:	160-402375016-1
Cylinder Number:	EB0118140	Cylinder Volume:	153.0 CF
Laboratory:	124 - Plumsteadville - PA	Cylinder Pressure:	2016 PSIG
Analysis Date:	Mar 07, 2022	Valve Outlet:	350
Lot Number:	160-402375016-1		

Expiration Date: Mar 07, 2030

Primary Standard Gas Mixtures are traceable to N.I.S.T. weights and/or N.I.S.T. Gas Mixture reference materials.

ANALYTICAL RESULTS

Component	Req Conc	Actual Concentration (Mole %)	Analytical Uncertainty
OXYGEN	2.000 %	2.005 %	+/- 0.02%
CARBON MONOXIDE	3.000 %	3.000 %	+/- 0.02%
CARBON DIOXIDE	18.00 %	18.00 %	+/- 0.02%
NITROGEN	Balance		

Notes:GROSS WEIGHT:29.581 KG
NET WEIGHT:5.442 KG
P/N A1336386
PO#89404761

EM-336

Jun 2022

Approved for Release

Air Liquide | Specialty Gases

Your complete laboratory solution



CERTIFICATE OF ANALYSIS

Customer: SERVICES POLYTESTS INC., (S2232)
6958, GAUDETTE
ST-JEAN SUR RICHELIEU QC
J3B 7S7

Analysis Date:	3/4/2022 9:44:18AM	**Servitrax barcode No:**	T2H6H8N
Product code:	A1334811	**Work order number:**	1607008
Grade:	PRIMARY	**Pressure:**	1450 psig
Size:	44		
CGA #:	590	**Volume:**	4.7M3
		Expiry date:	03/04/2025

COMPONENTS	NOMINAL CONCENTRATION	ANALYSIS RESULTS
CARBON DIOXIDE	10.0000 % Molar	10.00 % Molar
CARBON MONOXIDE	1.0000 % Molar	1.002 % Molar
OXYGEN	10.0000 % Molar	10.00 % Molar
NITROGEN	BALANCE	BALANCE

Analysis performed by:

TOSI ERNLE - LAB TECHNICIAN

Verified by:

AO

This Air Liquide Canada mixture is traceable to NIST

METHOD OF ANALYSIS:

Method of analysis is based on principles of gas chromatography and as documented in Air Liquide Canada operating procedure , where applicable, FID, TCD, PDHID, FT-IR, FPD,NO/NOx and SO2 chemiluminescence , hygrometer, and electrochemical cells and paramagnetic cell. Detectors were used in conjunction with packed or capillary columns calibrated flow meters and dilution calibrated system.

ANALYTICAL ACCURACY:

Quality	Concentration	Blend Tolerance	AA
PRIMARY	5%-50%	+/-1%	+/-1%
	0.5%-5%	+/-2%	
	1ppm-0.5%	+/-5%	
CERTIFIED	5%-50%	+/-5%	+/-2%
	0.5%-5%	+/-10%	+/-2%
	1ppm-0.5%	+/-20%	+/-5%
UNANALYZED	5%-50%	+/-10%	
	<5%	+/-20%	

EM-338

June 2022

This mixture was certified by a combination of weight and analysis (depending on component) using scales certified against weights traceable to the Institute for National Measurement Standards (INMS) of the National Research Council of Canada (NRCC), Report # W-021221-13857(MTL) and CA3033-022-050621-ACC (Calgary) or calibration standards prepared in that manner.

How to contact us & order

E-mail within your region: specgas.atlantic@airliquide.com specgas.qc@airliquide.com specgas.on@airliquide.com specgas.ab@airliquide.com specgas.midwest@airliquide.com specgas.pacific@airliquide.com

Customer Solution Center: 1800 217-2568 | Online 24/7 through My Airliquide.ca | Air Liquide Mobile App

Instrumentation Saint•Laurent inc.
Certified ISO 17025

CLAS NRC·CNRC
CLAS 2010-02

80 rue de la montagne
St-Joseph du lac
(Québec), J0N 1M0
Phone: (450) 473-6169
Fax: (450) 473-5207
info@instrumentationsainflaurent.com

CALIBRATION CERTIFICATE

CERTIFICATE #	CE-EM-340 2023-05-11

CLIENT	
Company:	Services Polytests Inc
Address:	695 B rue Gaudette
	St-Jean-sur-Richelieu, Québec, J3B 7S7

CALIBRATION SPECIFICATION	
Service Procedure:	4IN9106
Required Accuracy:	+/- 1.0 inHg
Calibration Frequency:(days)	365

INSTRUMENT SPECIFICATION			
Instrument Type:	Pressure Gauge	Input Type:	Pression
Manufacturer:	Dwyer	Output Type:	Digitale
Model #:	DPG200	Measurement Type:	Pressure
Serial #:	S799031-0001	Range:	-29.93 to 0 inHg
Location:	N.A.	Version:	Machine: N.A.

CALIBRATORS SPECIFICATION			
Calibrator:	Crystal XP2i 300	Certification #:	2022006892
Serial #:	258139	Certification Date:	2022-09-09
Certified by:	Alpha Controls	Next Certification:	2023-09-09
Comments:			
Calibrator:	Fluke 744	Certification #:	2022006829
Serial #:	7798010	Certification Date:	2022-09-15
Certified by:	Alpha Controls	Next Certification:	2023-09-15
Comments:			

5F09106 Version 1

Copyright of this certificate belongs to Inst. St-Laurent Inc. and must be reproduced in full, unless a written permission of Inst. St-Laurent Inc.

Instrumentation Saint•Laurent Inc.
Certified ISO 17025

CLAS NRC·CNRC
CLAS 2010-02

50 rue de la montagne
St-Joseph du lac
(Québec), J0N 1M0
Phone: (450) 473-6160
Fax: (450) 473-5207
info@instrumentationsaintlaurent.com

CALIBRATION CERTIFICATE

CERTIFICATE #	CE-EM-340 2023-05-11

CALIBRATION RESULTS

Entry Source	Given Value	Actual Value	Deviation Error	After Calib Value	Accuracy	Uncertainty
Conformity	Comment					
0.00 "Hg	0.00 "Hg	0.00 "Hg	0.00 "Hg	0.00 "Hg	+\- 1.0 "Hg	+\- 0.5 "Hg
Compliant	Verification of the indicator					
-7.50 "Hg	-7.50 "Hg	-7.52 "Hg	-0.02 "Hg	-7.52 "Hg	+\- 1.0 "Hg	+\- 0.5 "Hg
Compliant	Verification of the indicator					
-15.00 "Hg	-15.00 "Hg	-15.03 "Hg	-0.03 "Hg	-15.03 "Hg	+\- 1.0 "Hg	+\- 0.5 "Hg
Compliant	Verification of the indicator					
-22.50 "Hg	-22.50 "Hg	-22.53 "Hg	-0.03 "Hg	-22.53 "Hg	+\- 1.0 "Hg	+\- 0.5 "Hg
Compliant	Verification of the indicator					
-28.00 "Hg	-28.00 "Hg	-28.05 "Hg	-0.05 "Hg	-28.05 "Hg	+\- 1.0 "Hg	+\- 0.5 "Hg
Compliant	Verification of the indicator					
-22.50 "Hg	-22.50 "Hg	-22.53 "Hg	-0.03 "Hg	-22.53 "Hg	+\- 1.0 "Hg	+\- 0.5 "Hg
Compliant	Verification of the indicator					
-15.00 "Hg	-15.00 "Hg	-15.02 "Hg	-0.02 "Hg	-15.02 "Hg	+\- 1.0 "Hg	+\- 0.5 "Hg
Compliant	Verification of the indicator					
-7.50 "Hg	-7.50 "Hg	-7.52 "Hg	-0.02 "Hg	-7.52 "Hg	+\- 1.0 "Hg	+\- 0.5 "Hg
Compliant	Verification of the indicator					
0.00 "Hg	0.00 "Hg	0.00 "Hg	0.00 "Hg	0.00 "Hg	+\- 1.0 "Hg	+\- 0.5 "Hg
Compliant	Verification of the indicator					
0.00 "Hg	20.00 mA	20.00 mA	0.00 mA	20.00 mA	+\- 0.5 mA	+\- 0.0045 mA
Compliant	Verification of the analogic output					
-7.50 "Hg	15.99 mA	15.99 mA	0.00 mA	15.99 mA	+\- 0.5 mA	+\- 0.0045 mA
Compliant	Verification of the analogic output					
-15.00 "Hg	11.98 mA	11.97 mA	-0.01 mA	11.97 mA	+\- 0.5 mA	+\- 0.0045 mA
Compliant	Verification of the analogic output					
-22.50 "Hg	7.97 mA	7.91 mA	-0.06 mA	7.91 mA	+\- 0.5 mA	+\- 0.0045 mA
Compliant	Verification of the analogic output					
-28.00 "Hg	5.03 mA	5.00 mA	-0.03 mA	5.00 mA	+\- 0.5 mA	+\- 0.0045 mA
Compliant	Verification of the analogic output					
-22.50 "Hg	-22.50 mA	7.91 mA	-0.06 mA	7.91 mA	+\- 0.5 mA	+\- 0.0045 mA
Compliant	Verification of the analogic output					
-15.00 "Hg	-15.00 mA	11.97 mA	-0.01 mA	11.97 mA	+\- 0.5 mA	+\- 0.0045 mA
Compliant	Verification of the analogic output					
-7.50 "Hg	-7.50 mA	15.99 mA	0.00 mA	15.99 mA	+\- 0.5 mA	+\- 0.0045 mA
Compliant	Verification of the analogic output					
0.00 "Hg	0.00 mA	20.00 mA	0.00 mA	20.00 mA	+\- 0.5 mA	+\- 0.0045 mA
Compliant	Verification of the analogic output					

Environmental Conditions: Temperature: 21 °C Humidity: 30 %RH

Comments:

Version 1

Copyright of this certificate belongs to Inst. St-Laurent Inc. and must be reproduced in full, unless a written permission of Inst. St-Laurent Inc.

Instrumentation Saint-Laurent Inc.
Certified ISO 17025

80 rue de la montagne
St-Joseph du lac
(Québec), J0N 1M0
Phone: (450) 473-6160
Fax: (450) 473-6207
info@instrumentationsaintlaurent.com

CLAS 2010-02

CALIBRATION CERTIFICATE

CERTIFICATE #	CE-EM-340 2023-05-11

CALIBRATION DATE/ISSUANCE OF CERTIFICATE	
Calibration Date:	2023-05-11
Next Calibration:	2024-05-11
Certificate Date:	2023-05-11

CALIBRATION CONFORMITY		
	Before	After
Compliant:	X	X
Non Compliant:		

- Instrumentation St. Laurent Inc. Certify that the above instrument, meets or exceeds the specifications established by the manufacturer. The company's quality system complies with the requirements of ISO 17025 :2017 and the standards used to perform the calibration is traceable to NRC and / or NIST.
- Reported uncertainties represent a 95 % of confidence level assuming a normal distribution k=2.
- The declaration of conformity does not include Instrumentation St-Laurent Inc. uncertainty measurement. Decision rule is based on binary statement for simple acceptance rule against ILAC G8 standard and test tolerance limits are based on customer specifications, unless otherwise specified.
- The results presented in this certificate relate only to objects subject to calibration.
- It is the customer's responsibility to ensure that calibrated equipment meets its intended use.
- The date format used in this certificate is: YYYY-MM-DD.

Assessment Service Calibration Laboratory (ASCL) of the National Research Council of Canada (NRC) has assessed and certified calibration laboratory's ability and traceability to the International System of Units (SI) or to standards acceptable according to ASCL. This calibration certificate is issued in accordance with the terms of ASCL certification and accreditation requirements of the Standards Council of Canada (SCC). SCC accreditation number: # 669. ASCL and SCC does not guarantee the accuracy of individual calibrations by accredited laboratories.

Marc Gingras - Technicien

May 17th 2023

Copyright of this certificate belongs to Inst. St-Laurent Inc. and must be reproduced in full, unless a written permission of Inst. St-Laurent Inc.

CERTIFICATE OF CALIBRATION

ACCREDITED
CALIBRATION
CERT #2260.01

Certificate Number: 2023005642

Manufacturer:	Control Company	***RMA:***	AC23061183
Model:	4199	***Workorder:***	2023005642
Description:	Barometer	***Barcode:***	AL00040350-P
Serial:	192343395	***Received Conditions:***	In Tolerance
ID:	EM 304	***Calibration Date:***	06-Jul-2023
Customer:	SERVICES POLYTESTS 695-B GUADETTE ST-JEAN-SUR-RICHELIEU QC J3B 7S7	***Calibration Due:***	06-Jan-2024
		Temperature:	22.79°C
		Humidity:	63.3%RH

STATEMENT OF UNCERTAINTY: The reported expanded uncertainty of measurement is stated as the standard measurement uncertainty multiplied by the coverage factor K = 2, which for a normal distribution corresponds to a coverage probability of approximately 95 percent. Alpha Controls & Instrumentation Inc. certifies this instrument was calibrated on the date shown using standards traceable to NIST/NRC or accepted intrinsic standards and in compliance with ISO/IEC-17025:2017 and ANSI/NCSL Z540-1.

Any statement of compliance is made without taking measurement uncertainty into account and is based on UUT performance against required tolerance only. The customer must ensure equipment calibrated meets the intended use.

Tolerance is based on manufacturer specification if not stated otherwise . Calibration results relate to items calibrated only.

This certificate shall not be reproduced except in full without written approval of Alpha Controls and Instrumentation Inc .

Functional tests are not covered by our scope of accreditation.

STANDARDS USED

Description	***Model***	***ID***	***Cal Date***	***Due Date***
Pressure Controller/Calibrator	DH Instruments PPC3	PRE-CAL-04	27-Jun-2023	30-Jun-2024
Reference Pressure Monitor	Fluke RPM4	PRE-MTR-04	27-Jun-2023	30-Jun-2024

Notes: None.

August 1st 2023

Performed by: Tony Wheaton
Technician
(digitally signed on 06-Jul-2023 11:36 am)

QA Reviewed by: Sree Chukka
Technician
(digitally signed on 06-Jul-2023 4:25 pm)

Quality Management System is assessed and registered by Intertek as conforming to the requirements of ISO9001

Procedure: Pressure/Vacuum CAL VER /DHI PPC3 (2.5A) **FOUND-LEFT (Pass)**

Test Description	True Value	Test Results	Tolerance	Lower Limit	Upper Limit	Status	Uncertainty
PRESSURE TEST							
MEASUREMENT UNITS: mbar a							
990.78	990.78	991.0	65.00	985.8	995.8	Pass	1.2e-001

END OF CERTIFICATE

APPENDIX 4: Unit pre burn

Temps	piece adition	Flue	Room	Tunnel	Catalyst center	axle	Right	back	bottom	Top	Left
	mixture content each										
acquisition	pieces	temp	temp	dry bulb							
minutes		°F	°F	°F	°F	psi	°F	°F	°F	°F	°F
0		77,12	77,28	78,63	78,13	2,85	76,18	80,24	80,85	78,63	76,74
10	3 pieces	398,53	77,74	85,85	275,97	4,46	80,48	95,83	179,07	82,51	89,45
20	21-21	444,03	78,74	96,02	526,59	3,05	119,96	132,30	343,19	116,31	149,05
30		455,20	79,31	94,96	488,96	1,96	176,57	191,79	483,57	159,03	232,36
40	3 pieces	389,91	80,23	93,68	447,95	1,06	203,43	248,72	533,17	186,30	288,16
50	21-21-20	378,07	81,08	96,28	418,39	10,53	275,52	286,37	562,88	199,85	308,69
60		358,30	81,63	86,81	515,81	9,96	288,77	286,57	511,13	188,73	301,85
70		379,07	81,88	88,70	515,40	9,46	248,24	282,91	515,26	193,47	288,82
80		391,22	82,70	87,80	782,89	8,96	233,84	273,82	514,27	190,48	278,61
90		372,19	82,86	87,04	489,46	8,46	223,39	270,53	502,34	186,88	264,95
100		338,73	82,72	89,45	623,01	13,23	218,14	269,70	479,28	185,20	259,05
110		369,01	82,98	93,50	698,55	8,70	240,39	284,21	468,13	210,11	265,43
120		410,03	83,96	96,01	1039,93	7,96	265,71	310,44	459,96	268,24	284,75
130		368,96	85,40	93,46	846,20	8,20	288,28	341,86	508,56	314,84	337,86
140		337,93	86,54	90,84	788,45	5,30	271,09	366,81	490,32	329,46	366,81
150		311,41	87,67	91,06	743,95	4,66	266,54	376,80	468,89	329,03	384,34
160		298,33	88,67	89,70	748,81	4,10	261,72	365,21	418,11	319,75	380,52
170		280,54	89,65	89,53	738,69	3,60	260,36	364,54	426,46	305,05	367,93
180	3 pieces	284,55	90,46	88,76	739,27	3,20	267,71	378,83	441,71	290,34	378,69
190	20-20-20	288,07	90,71	91,83	809,80	10,83	284,07	389,46	485,19	277,51	370,85
200		288,51	91,26	92,41	860,87	9,50	345,53	392,79	421,62	279,82	372,25
210		288,07	91,53	92,87	886,51	8,80	344,08	389,75	433,31	281,29	379,37
220		344,39	91,54	93,21	899,01	7,66	353,03	387,57	440,56	304,50	389,89
230		342,49	92,24	93,19	887,03	6,73	370,49	392,47	462,48	322,31	403,13
240		328,94	93,13	92,82	894,38	5,96	387,08	397,82	468,21	338,78	421,98
250		314,01	93,96	93,61	799,44	5,26	400,39	408,28	465,51	338,34	427,56
260		308,47	95,26	93,03	759,47	4,66	415,12	414,67	472,01	333,59	426,56
270		305,99	96,50	91,72	756,78	4,10	419,66	413,44	473,01	327,54	427,21
280		304,17	97,26	91,40	755,66	3,60	412,60	415,42	477,04	319,95	425,45
290		302,08	98,70	90,93	760,91	3,30	405,65	413,57	469,10	306,59	422,12
300		296,74	97,75	90,13	768,86	3,00	393,03	409,31	461,29	295,17	417,09
310		279,73	96,36	89,30	694,79	2,70	379,90	400,82	462,66	283,85	412,59
320		269,67	96,15	87,46	669,70	2,60	368,47	390,22	477,63	272,31	408,45
330		249,33	96,79	86,70	645,18	2,40	355,08	376,86	472,96	258,81	403,63
340	5 pieces	242,46	96,57	86,13	633,11	2,20	343,88	369,50	469,58	247,12	398,78
350	21-21-20-20-20	300,19	95,19	104,34	347,20	18,10	335,48	360,51	461,87	237,40	394,53
360		231,88	94,22	88,92	454,24	17,10	319,20	347,83	452,94	234,97	387,43
370		228,03	91,89	86,70	426,25	15,40	324,82	333,08	447,78	212,82	340,95
380		269,79	93,26	89,90	461,13	15,80	295,79	333,26	444,71	204,78	324,33
390		227,36	92,43	87,17	629,78	14,80	269,91	318,30	444,58	202,59	312,37
400		286,34	92,97	89,68	1035,33	13,80	299,60	333,81	445,11	227,29	308,17
410		219,69	93,75	90,67	1054,68	12,90	310,28	340,47	444,97	222,09	305,66
420		228,14	94,48	91,54	1060,94	12,00	324,67	353,19	444,15	240,25	309,00
430		226,02	95,27	91,75	1013,18	11,10	339,58	365,11	444,06	262,18	315,31
440		228,46	95,73	93,22	847,41	10,10	353,63	386,50	449,59	286,48	326,50
450		222,96	96,90	91,64	826,21	9,00	371,96	405,21	451,33	330,23	343,35
460		228,21	97,25	90,84	891,89	8,10	388,28	404,73	418,12	338,95	359,68
470		225,79	97,92	91,02	860,93	7,40	382,71	402,33	405,21	379,80	370,11
480		228,58	98,70	90,63	862,65	6,80	388,36	401,56	402,18	391,31	380,03
490		225,11	99,04	90,37	865,77	5,90	400,60	401,33	397,17	397,88	389,72
500		224,41	99,57	89,98	862,26	5,30	401,54	401,59	395,14	400,50	398,37
510		228,28	100,01	89,03	797,77	5,00	397,93	398,91	397,38	394,92	401,71
520		241,58	100,51	88,16	724,13	4,80	390,60	392,99	404,93	356,12	405,10
530		227,63	100,94	87,38	844,33	4,60	382,07	388,06	419,10	328,87	394,07
540		216,58	100,77	86,78	866,60	4,50	372,37	378,63	429,54	304,67	385,31
550		228,33	100,39	86,23	863,46	4,30	364,41	371,20	426,07	284,45	380,90
560		222,80	99,44	85,84	840,57	4,20	357,22	363,89	424,08	268,78	388,17
570		197,88	99,15	85,56	826,69	4,10	350,68	357,40	426,46	255,17	380,98
580		189,62	98,95	85,21	812,15	3,99	345,21	351,11	402,77	243,89	375,05
590		188,53	98,73	84,92	805,89	3,89	339,06	345,25	405,04	234,34	369,37
600		185,42	97,96	84,57	809,89	3,79	333,10	339,02	402,44	226,14	365,69
610		183,77	98,07	84,43	808,80	3,70	327,46	333,06	402,47	218,31	359,10
620		181,90	97,68	84,26	803,80	3,60	322,95	327,83	402,58	212,29	354,75
630		182,35	97,46	84,05	802,97	3,50	317,91	323,01	406,53	207,11	350,90
640		184,24	97,10	84,06	804,80	3,30	313,17	317,53	382,90	203,10	346,33
650		182,45	96,98	83,92	878,04	3,19	308,54	311,47	384,97	200,31	342,48
660		180,44	96,26	83,68	804,32	3,10	303,90	305,37	379,04	197,35	338,24
670		177,82	95,83	83,57	805,78	3,00	299,78	300,02	377,12	195,22	336,04
680		178,22	95,63	83,43	803,89	2,90	295,69	294,20	373,74	192,74	332,50
690		87,48	75,27	75,47	98,80	4,60	90,58	100,70	115,73	96,79	96,12
700		185,74	75,98	81,78	173,81	4,60	92,15	101,38	120,38	91,05	103,38
710	4 pieces	308,83	76,92	118,86	826,40	3,60	93,11	109,48	227,97	84,49	123,38
720	21-22-22-21	191,33	76,33	89,50	261,21	15,80	165,12	132,43	348,78	113,42	188,13
730		146,50	76,22	78,75	306,37	12,46	114,47	145,84	447,03	122,22	202,72
740		140,37	76,01	78,57	402,70	12,00	119,60	148,79	462,93	124,67	201,03
750		130,43	76,80	78,12	396,82	9,70	121,89	149,81	485,40	124,46	198,46
760		133,93	76,40	77,72	392,66	9,46	123,09	149,59	467,10	123,09	198,58
770		119,40	76,06	77,33	391,24	9,23	124,17	149,14	464,62	120,95	194,28
780		134,22	76,48	77,88	388,80	8,81	127,80	151,80	472,91	119,55	194,97
790		156,36	77,05	79,12	315,75	8,46	131,94	154,04	481,96	119,97	196,03
800		129,93	76,56	78,59	377,56	8,00	139,05	159,39	508,39	121,39	198,35
810		128,04	77,01	78,66	384,13	7,70	141,30	159,89	512,86	121,80	199,95
820		134,58	76,91	78,54	386,82	7,55	141,10	159,43	484,60	120,90	199,93
830		132,24	77,01	78,37	382,22	7,30	141,39	158,89	467,20	119,84	199,94
840	3 pieces	159,66	77,83	82,60	196,69	7,00	141,34	158,33	473,85	119,87	199,89
850	21-21-20	140,42	77,54	79,98	376,86	6,70	140,58	157,89	466,66	117,45	196,82
860		280,37	77,67	83,65	601,35	8,60	145,00	165,40	470,66	126,73	194,20
870		309,26	78,08	84,83	646,39	7,70	160,68	183,71	491,36	174,09	211,28
880		330,15	79,23	85,59	667,81	6,90	178,93	205,39	507,54	221,67	232,10
890		315,06	79,66	85,63	805,39	5,90	208,14	231,84	504,34	259,81	257,90
900		311,09	79,48	86,30	797,66	5,10	246,21	261,84	502,44	278,81	280,21
910		311,62	79,91	87,72	791,86	4,90	274,53	286,73	490,13	297,74	316,14
920		307,48	81,26	87,97	797,80	3,80	295,96	306,11	496,96	313,13	345,16
930		288,12	82,95	87,47	709,72	3,00	319,45	327,84	504,30	314,63	365,24
940		280,28	84,09	86,66	706,19	2,80	334,03	335,89	507,75	302,23	370,96
950		272,34	84,66	86,64	713,20	2,30	333,96	333,91	517,66	284,79	364,75
960		261,12	85,62	86,22	677,36	2,10	322,80	330,79	520,50	266,92	355,82
970		248,05	87,26	84,39	639,43	1,90	317,96	330,91	509,16	253,39	350,25
980		236,59	87,19	83,72	609,34	1,70	309,80	325,33	507,39	240,54	353,83

990		318,08	87,58	98,17	414,64	11,30	286,89	316,44	508,89	230,08	347,42
1000		321,59	87,39	89,08	507,49	10,40	290,22	312,77	483,08	220,34	330,89
1010		344,10	87,80	90,26	654,01	9,70	283,89	309,44	479,79	215,57	322,97
1020		415,60	87,58	93,63	981,67	8,60	281,41	311,58	521,01	214,22	318,84
1030		474,46	89,55	97,01	1155,41	7,70	279,88	326,29	530,89	221,41	330,38
1040		508,31	90,34	98,48	1278,48	6,60	281,08	347,44	539,31	235,91	337,52
1050		385,37	90,49	91,18	848,01	5,30	301,30	371,01	564,71	276,08	361,63
1060		355,61	90,49	89,01	679,58	4,50	325,52	391,39	586,60	320,48	378,38
1070		340,59	89,54	87,58	651,81	3,70	340,44	398,35	577,58	338,11	390,12
1080		332,53	88,84	88,92	643,88	2,90	360,10	397,21	579,03	345,41	411,89
1090		317,42	88,98	85,36	768,88	2,40	378,33	407,44	588,24	349,10	426,35
1100		298,50	88,79	84,58	733,43	2,00	377,09	407,88	590,26	342,90	428,88
1110		281,58	90,31	83,59	697,98	1,80	366,80	401,97	584,01	326,50	422,33
1120		268,63	90,84	82,86	667,94	1,60	356,08	392,24	588,18	305,32	413,24
1130		257,40	91,60	83,23	652,48	1,50	344,61	381,12	567,70	284,74	402,88
1140		246,78	90,13	81,72	621,53	1,40	334,39	369,74	553,61	267,44	394,24
1150		236,41	88,60	81,31	579,69	1,30	326,19	359,10	543,37	253,00	386,03
1160		226,79	87,81	80,90	559,80	1,10	319,05	348,54	532,63	238,55	375,22
1170	4 pieces	267,88	87,38	91,98	383,13	15,40	307,59	337,17	508,18	226,71	360,30
1180	21-20-20-23	220,06	87,81	82,17	400,00	14,40	282,48	320,19	465,14	211,59	332,62
1190		326,68	87,52	85,31	889,78	13,40	265,32	307,41	440,13	207,98	313,47
1200		407,77	87,03	89,64	1222,64	12,30	255,16	306,67	424,98	221,23	301,41
1210		374,38	85,84	90,25	948,08	11,10	262,63	320,88	417,01	238,51	296,39
1220		368,11	85,20	91,41	857,80	9,90	278,59	335,38	409,80	271,85	323,09
1230		357,08	85,51	91,19	855,63	8,80	305,32	351,59	402,53	310,55	356,30
1240		350,61	86,50	91,39	884,79	7,70	333,85	368,34	398,63	329,35	383,13
1250		347,63	86,67	90,59	839,65	6,60	368,21	389,84	393,84	349,21	405,74
1260		337,71	90,80	89,89	827,35	5,60	389,60	401,84	393,98	358,84	421,95
1270		340,20	92,37	89,68	860,48	5,10	395,32	404,49	394,80	363,87	430,09
1280		341,19	92,58	89,98	873,41	4,60	395,61	405,73	403,57	354,28	434,32
1290		331,76	93,05	89,21	840,21	4,10	393,21	404,59	424,33	338,67	434,44
1300		332,15	93,72	88,74	821,61	3,80	387,63	403,13	445,98	326,48	434,67
1310		291,22	94,68	87,28	679,79	3,30	383,39	397,93	439,04	314,83	432,26
1320		273,14	95,30	86,30	653,81	3,20	381,81	388,03	445,60	297,27	425,68
1330		260,04	94,00	85,36	632,80	3,00	371,32	379,18	450,58	280,89	418,88
1340		258,57	93,81	85,14	622,75	2,80	363,43	371,35	451,08	268,56	413,43
1350		246,84	93,04	84,70	605,88	2,70	356,18	365,33	449,63	254,04	406,28
1360		244,55	92,11	84,37	595,88	2,50	349,84	360,04	455,46	243,89	400,45
1370		240,08	91,41	84,26	589,18	2,40	343,37	354,19	458,68	234,59	394,90
1380		234,37	90,68	83,95	577,71	2,30	326,45	346,84	460,78	226,79	388,47
1390		229,68	90,16	83,72	574,61	2,10	320,07	338,47	462,01	220,11	381,04
1400		225,67	89,68	83,43	560,01	2,00	323,17	332,59	460,53	213,88	373,57
1410		220,60	89,06	83,18	549,35	1,90	315,82	326,46	460,69	207,78	366,77
1420		216,68	88,53	82,97	535,27	1,80	308,64	321,25	459,04	202,39	357,96
1430		212,79	88,04	82,65	518,89	1,70	302,18	315,79	453,93	196,88	350,13
1440		209,21	87,38	82,39	512,40	1,60	295,58	309,73	446,28	192,14	341,84
1450		205,58	87,04	82,36	499,27	1,50	289,97	303,75	440,07	187,84	333,62
1460		203,07	86,65	82,06	494,65	1,50	283,67	298,47	436,30	183,37	326,61
1470		199,64	86,43	81,69	482,34	1,40	278,27	293,23	432,07	179,64	319,95
1480	3 pieces	107,01	58,37	73,59	140,50	0,61	70,80	74,39	122,58	73,51	70,80
1490	21- 21- 20	333,40	82,02	85,86	647,71	8,26	384,90	395,47	462,44	236,42	454,42
1500		246,18	81,55	84,37	636,17	7,97	357,13	395,85	416,73	223,28	424,23
1510		246,13	81,37	83,93	668,09	7,67	326,32	331,83	400,85	209,88	388,27
1520		246,13	81,74	83,62	700,89	7,27	303,83	303,71	385,37	197,22	359,32
1530		265,65	81,41	84,27	697,84	6,67	293,71	294,85	383,11	192,05	338,25
1540		289,63	80,67	84,02	774,21	5,97	307,72	281,04	383,02	199,10	332,32
1550		298,68	81,20	84,12	804,41	5,27	324,04	283,23	383,64	208,37	330,13
1560		300,28	81,01	84,14	807,84	4,67	338,27	289,54	384,90	215,81	331,27
1570		293,94	81,59	83,96	768,11	4,07	352,71	298,97	384,38	222,81	336,30
1580	4 pieces	291,58	81,08	83,86	745,63	3,47	364,20	305,69	385,28	228,85	340,01
1590	20-20-21-22	359,29	81,50	84,80	1086,58	14,88	355,73	306,60	355,28	235,48	336,39
1600		363,64	81,59	85,30	1008,90	13,88	341,77	300,85	345,48	234,64	319,38
1610		363,21	81,54	85,15	931,86	12,48	340,50	298,60	341,88	274,24	311,19
1620		368,04	81,40	85,19	904,58	11,38	346,74	303,75	336,75	308,63	314,29
1630		359,02	81,38	84,89	917,51	10,18	355,71	313,59	332,17	328,81	328,91
1640		349,53	81,53	84,94	903,88	9,17	367,20	322,49	328,30	345,25	344,08
1650		358,21	81,41	84,81	949,67	8,18	378,82	329,88	325,07	348,81	359,08
1660		362,32	81,47	85,07	950,88	7,07	391,32	337,88	321,98	360,42	374,21
1670		356,43	81,62	84,78	912,41	5,97	405,47	348,64	324,58	371,42	388,76
1680		341,68	81,58	84,23	881,27	5,27	414,08	357,13	335,14	374,81	400,64
1690		317,98	81,38	84,01	840,39	4,59	418,13	362,19	352,38	371,20	408,30
1700		297,89	81,37	83,72	820,45	4,17	413,86	363,45	371,40	351,44	411,33
1710		281,24	81,33	83,25	777,81	3,87	407,48	362,20	389,17	324,21	410,44
1720		260,08	81,15	82,97	718,71	3,57	400,63	361,10	402,45	296,18	407,27
1730		244,52	80,82	82,59	685,59	3,37	392,85	358,69	413,09	270,75	406,38
1740		237,53	80,65	82,30	677,49	3,17	386,78	355,48	407,55	250,75	406,59
1750		234,05	80,63	82,14	673,07	2,97	379,55	349,63	403,84	235,23	405,40
1760		230,17	80,64	82,01	673,17	2,87	371,28	341,49	396,47	223,21	402,63
1770		226,73	80,73	81,71	660,51	2,67	363,14	334,17	394,10	214,04	398,51
1780		224,61	80,37	81,58	666,35	2,57	355,14	328,60	392,68	206,69	395,73
1790		224,23	80,21	81,34	659,15	2,37	348,19	323,40	389,89	202,04	390,92
1800		221,47	80,18	81,24	646,44	2,20	342,47	318,21	387,39	196,60	385,61
1810		220,55	80,26	81,15	656,15	2,07	337,88	315,04	387,54	192,88	382,20
1820		217,84	80,13	80,97	650,89	1,97	332,44	313,81	384,36	189,41	379,02
1830		213,19	79,92	80,88	622,35	1,77	327,72	312,90	381,59	186,63	376,49
1840		210,99	79,85	80,72	627,04	1,67	322,58	311,78	386,78	183,25	373,58
1850		207,58	79,55	80,53	606,40	1,57	317,09	307,85	383,40	180,07	368,92
1860		203,30	79,36	80,35	594,50	1,37	311,18	303,50	380,81	177,04	363,49
1870		201,21	79,50	80,18	591,54	1,27	325,03	298,32	379,99	173,80	358,21
1880		200,67	79,35	80,02	591,19	1,17	300,57	293,75	384,32	170,85	353,66
1890		198,20	79,09	80,00	591,79	1,07	298,71	289,27	389,79	168,18	349,30
1900		194,62	79,21	79,80	559,36	0,97	292,03	284,69	381,70	165,38	345,11
1910		192,58	79,22	79,75	597,65	0,87	288,35	279,17	379,17	162,71	340,80
1920		191,25	78,88	79,61	570,14	0,67	283,34	274,13	373,78	160,27	337,01
1930		190,57	78,85	79,50	555,98	0,65	278,71	269,99	367,05	157,57	333,39
1940		188,62	78,88	79,38	561,75	0,52	275,11	265,59	363,67	156,70	330,51
1950		186,97	78,74	79,33	551,29	0,47	270,89	261,40	357,73	154,24	326,85
1960		184,60	78,60	79,15	545,14	0,27	266,10	258,69	355,39	152,33	322,30
1970		182,63	78,34	79,08	547,21	0,17	261,27	252,38	352,25	149,63	319,90
1980	3 pieces	184,75	78,27	79,03	557,97	0,07	256,51	248,33	345,34	147,34	317,58
1990	20-20-21	264,63	88,45	71,39	317,84	4,87	97,65	95,38	166,94	77,38	97,95
2000		330,84	88,72	71,82	790,03	3,57	126,86	133,38	213,58	105,18	133,24
2010		321,63	89,00	72,08	721,41	2,77	169,45	169,49	243,04	135,75	180,62
2020	2 pieces	360,11	89,31	72,58	1060,16	2,07	205,33	196,63	307,59	160,65	230,60

2030	19 - 19	377,43	69,40	73,81	912,58	4,77	218,13	221,43	337,48	173,34	348,35
2040		381,50	69,42	74,04	907,40	5,47	223,13	238,61	365,17	193,48	358,30
2050		405,08	69,59	74,20	1027,30	4,17	255,65	255,83	367,43	245,08	380,64
2060	4 pieces	374,28	69,52	74,03	832,39	3,17	304,33	288,65	381,23	289,37	319,63
2070	19-19-19-20	407,45	69,57	74,82	980,75	13,98	328,09	307,17	405,34	299,33	342,78
2080		407,89	69,60	74,60	958,75	13,57	338,01	308,65	407,94	308,65	336,36
2090		408,15	69,46	74,59	946,75	11,17	352,58	315,36	404,66	321,59	330,13
2100		399,60	69,73	74,39	983,33	9,89	371,95	325,28	399,52	339,22	337,08
2110		389,41	69,84	74,53	910,54	8,77	392,85	338,79	389,75	346,93	352,10
2120		380,89	70,08	74,40	915,22	7,97	403,32	346,80	394,13	345,17	388,02
2130		387,26	70,38	74,26	908,18	7,17	405,08	357,59	401,66	341,90	398,02
2140		380,44	70,51	74,17	904,41	6,18	402,75	368,14	417,23	331,83	402,95
2150		351,11	70,40	74,11	872,98	5,37	406,05	384,26	437,07	326,71	417,35
2160		344,50	70,71	74,15	860,39	4,77	409,21	394,91	441,71	320,36	428,55
2170	3 pieces	340,63	70,64	73,92	878,67	4,17	407,43	397,81	450,05	314,67	437,65
2180	19-20-20	350,27	70,69	74,18	917,64	12,46	393,43	392,57	447,04	304,48	439,65
2190		371,64	70,75	74,53	1023,33	11,48	389,18	370,13	419,58	287,29	432,06
2200		383,37	70,67	75,29	1022,75	10,38	388,32	358,19	407,39	293,64	415,92
2210		388,60	71,02	75,55	1010,83	9,27	378,96	357,08	410,80	307,73	417,71
2220		385,40	71,09	75,50	970,88	8,18	398,77	364,93	422,61	322,88	424,25
2230		375,75	71,32	75,66	980,04	7,27	414,65	376,08	432,61	330,39	431,56
2240		399,63	71,57	75,53	989,15	6,47	424,21	393,48	444,25	321,96	441,65
2250		357,46	71,38	75,34	881,29	5,77	431,03	407,11	452,52	330,09	458,33
2260		333,63	72,25	75,69	815,53	5,27	429,85	414,03	466,21	319,87	469,61
2270		330,88	73,13	76,76	771,08	4,87	429,14	414,38	480,79	303,80	475,91
2280		298,57	73,65	76,86	720,59	4,67	419,89	402,53	480,21	287,18	472,03
2290		285,47	73,84	76,94	667,60	4,47	407,85	390,57	481,38	268,17	466,64
2300		279,18	74,02	77,14	665,61	4,27	398,38	380,83	481,98	249,34	459,40
2310	4 pieces	276,65	73,42	76,93	671,84	4,13	393,33	370,57	454,45	237,74	450,60
2320	20-21-20-19	381,39	73,15	77,01	1085,43	14,78	374,40	353,99	444,18	226,57	432,30
2330		450,75	73,00	77,55	1045,19	13,42	363,43	343,51	433,69	245,61	415,65
2340		401,83	73,27	77,99	973,26	13,18	373,21	348,51	430,58	290,50	416,15
2350		390,05	73,13	77,74	969,23	10,98	390,03	357,04	428,47	318,81	425,78
2360		388,57	73,39	77,93	920,75	9,87	411,38	370,00	422,70	334,44	435,31
2370		374,15	73,54	77,86	880,22	8,89	428,64	383,83	418,78	344,05	450,11
2380		368,60	73,80	77,88	869,38	7,97	444,21	398,00	414,52	346,29	460,17
2390		358,95	74,06	77,51	855,65	7,17	458,68	405,28	414,86	343,80	475,09
2400		350,24	74,17	77,90	817,29	6,37	465,69	411,93	418,68	336,71	482,47
2410		338,57	74,11	77,58	781,74	5,95	467,45	415,36	420,36	328,65	487,52
2420		307,74	74,68	77,50	737,64	5,67	461,28	407,72	419,65	311,51	481,07
2430		291,54	75,02	77,35	707,06	5,46	434,54	395,43	422,08	288,89	471,57
2440		281,03	75,19	77,09	691,62	5,27	430,60	385,76	427,21	267,64	466,77
2450		274,11	74,70	77,11	694,30	5,07	428,88	378,51	432,93	249,20	462,05
2460		269,75	75,03	77,30	685,44	4,79	400,74	372,43	437,64	224,73	459,63
2470		268,23	75,82	77,60	672,40	4,67	393,31	368,39	433,66	223,80	454,60
2480	4 pieces	261,57	75,62	78,07	662,39	4,47	383,39	359,70	429,71	218,03	447,67
2490	21-20-22-19	358,85	75,47	78,37	808,35	16,38	360,77	344,88	419,51	207,74	430,56
2500		345,60	75,73	79,10	970,54	15,38	332,42	323,09	390,00	206,58	401,42
2510		377,64	76,20	80,11	1008,44	14,18	318,62	311,88	384,33	226,67	384,02
2520		385,49	76,54	80,67	1026,78	12,98	322,75	317,37	377,05	269,23	395,97
2530	5 pieces	398,39	76,64	81,27	1041,44	11,88	339,71	335,57	373,18	303,71	400,74
2540	20-20-22-22-21	440,18	76,35	83,33	1071,03	20,89	359,13	361,49	368,33	324,58	415,69
2550		438,65	76,39	83,40	1080,15	18,96	355,47	370,79	362,64	343,67	409,55
2560		446,38	77,15	83,90	1084,61	17,18	354,07	392,35	359,08	369,33	409,58
2570		445,08	77,40	84,30	1080,36	15,48	360,15	400,03	354,66	390,32	424,60
2580		439,24	77,61	84,41	1080,66	13,68	372,00	418,28	350,65	402,78	454,29
2590		436,78	77,75	84,36	1050,61	12,58	385,70	435,70	347,77	405,08	479,41
2600		411,49	78,17	84,05	978,48	11,48	399,68	448,78	348,77	401,38	493,63
2610		388,92	78,28	83,90	912,05	10,57	411,33	450,19	347,30	394,93	502,04
2620		370,62	78,45	83,58	880,21	9,67	419,40	448,51	350,47	381,07	506,33
2630		354,60	78,47	83,32	828,38	9,38	424,48	443,88	354,08	364,40	507,61
2640		345,01	78,42	82,97	809,39	8,88	430,34	439,48	358,50	348,70	499,80
2650		339,43	78,45	82,92	783,43	8,51	439,43	435,88	364,09	330,33	488,84
2660		312,61	78,44	82,43	758,18	8,28	439,75	431,88	369,92	308,69	480,55
2670		300,11	78,38	82,17	754,24	7,97	437,22	424,67	373,73	287,37	474,31
2680		292,78	78,39	81,84	731,43	7,77	433,49	417,78	377,98	269,67	466,75
2690		286,69	78,44	81,53	726,90	7,58	426,40	413,62	383,95	255,61	464,37
2700		282,28	78,29	81,29	724,09	7,38	423,33	410,38	389,49	245,75	461,40
2710		278,64	78,27	81,02	721,86	7,17	418,71	409,05	395,38	237,04	459,33
2720		277,63	78,25	80,96	719,27	6,88	411,59	406,03	399,03	230,08	457,48
2730		274,15	78,39	80,87	705,10	6,67	405,77	405,25	399,63	224,57	455,11
2740		277,43	78,33	80,83	711,62	6,47	399,41	397,17	393,25	220,95	452,74
2750		277,65	78,14	80,75	696,65	6,27	393,93	385,21	385,97	219,57	449,40
2760		274,04	78,01	80,73	691,37	6,07	388,91	374,17	381,04	217,04	446,35
2770		270,02	77,90	80,63	674,64	5,87	380,78	365,11	380,66	214,64	440,74
2780		265,27	78,02	80,43	651,39	5,67	374,08	358,41	379,24	209,85	439,96
2790		262,08	77,84	80,37	649,19	5,48	367,45	350,03	371,29	205,89	434,45
2800		255,66	77,89	80,25	625,60	5,37	361,29	343,52	366,53	200,88	428,49
2810		251,78	77,78	80,13	613,72	5,17	355,25	337,33	363,09	195,48	422,03
2820		251,09	77,72	80,19	621,11	5,00	350,99	332,23	359,39	191,67	418,33
2830		249,41	77,44	80,03	619,49	4,87	345,27	330,17	354,79	188,21	412,71
2840		247,28	77,53	79,84	614,19	4,67	342,83	330,55	355,57	185,47	410,05
2850		246,47	77,44	79,85	608,46	4,47	340,18	331,85	359,35	183,03	406,97
2860		244,53	77,32	78,72	602,43	4,37	337,19	331,53	359,50	181,91	403,58
2870		241,11	77,28	78,62	598,80	4,17	333,51	330,35	367,67	179,44	398,68
2880		239,50	77,20	78,45	589,46	4,07	328,95	326,39	364,77	177,28	395,92
2890		236,61	77,35	78,36	582,29	3,87	323,82	320,11	360,48	174,28	391,03
2900		234,85	78,64	78,19	578,84	3,77	319,39	314,39	357,15	172,44	388,15
2910		232,03	78,84	78,04	582,45	3,57	315,05	307,39	351,13	170,17	380,88
2920	3 pieces	227,87	78,97	78,59	555,98	3,47	310,33	299,53	345,10	167,10	374,88
2930	20-20-21	98,14	68,65	70,39	104,73	1,47	92,26	104,85	149,80	66,57	103,00
2940		267,07	67,91	73,14	221,47	5,47	98,31	108,89	243,24	91,39	108,40
2950		459,63	68,41	75,91	471,13	4,07	132,49	131,33	350,39	117,32	147,10
2960	3 pieces	490,67	68,67	76,95	514,67	2,77	180,08	170,75	467,52	134,74	218,91
2970	21-21-21	331,13	68,84	74,17	785,62	8,73	225,38	210,31	421,63	180,25	275,63
2980		339,35	69,36	73,89	771,58	7,77	248,64	217,73	384,95	192,14	272,17
2990		356,32	69,09	73,89	866,39	6,57	258,30	224,67	375,18	216,95	269,49
3000		400,10	68,74	74,18	1030,04	5,07	283,37	241,89	361,88	255,03	285,65
3010		381,34	68,98	74,34	918,90	4,07	325,62	274,86	350,55	300,79	321,74
3020	4 pieces	345,40	69,74	73,89	850,18	3,37	357,66	306,43	357,99	318,45	356,59
3030	22-21-22-19	363,64	68,98	73,92	885,37	12,98	363,05	333,63	377,18	304,35	359,36
3040		331,74	69,40	73,77	754,78	12,38	332,95	314,67	383,03	280,44	353,67
3050		332,54	69,71	73,84	756,62	11,78	335,53	298,47	409,89	254,23	333,55
3060		331,67	69,86	73,80	806,70	11,17	287,36	288,08	430,01	231,46	315,18

3070		346,48	70,02	74,05	923,91	10,47	276,91	276,93	443,73	218,74	301,39
3080	3 pieces	357,47	70,14	74,15	960,07	9,77	272,82	275,30	448,26	211,14	294,95
3090	23-23-22	367,02	70,57	75,32	999,94	16,28	277,09	283,15	452,33	209,42	298,12
3100		382,65	71,14	75,71	952,68	15,08	275,21	298,95	462,07	222,58	305,90
3110		389,68	71,10	76,24	962,67	13,98	277,38	315,83	465,38	238,25	316,48
3120		385,55	72,12	76,96	992,78	12,88	292,03	332,37	463,27	260,94	330,23
3130		385,45	71,67	76,75	916,93	11,58	316,35	342,41	463,21	297,76	345,40
3140		377,93	73,07	77,75	877,93	10,47	341,59	350,71	461,54	316,99	360,17
3150		374,18	72,54	77,68	877,08	9,48	360,58	354,28	464,08	326,15	378,93
3160		380,12	73,10	77,72	878,75	8,64	359,71	362,14	455,84	329,96	397,23
3170		345,84	73,39	77,60	855,41	7,97	367,57	393,10	461,71	323,54	413,02
3180		339,58	73,75	78,14	852,72	7,48	398,54	395,81	474,81	306,98	416,55
3190		332,23	73,48	77,94	861,01	6,97	401,10	392,70	450,75	292,24	412,26
3200		322,87	74,17	78,15	875,86	6,52	391,65	384,33	443,38	279,18	403,37

AGING PI-20294 CATALYST equivalency

Time acquisition minutes	number of piece reject moisture content each pieces	Flue temp °F	Room temp °F	Tunnel dry bulb °F	Catalyst °F	scale lbs	Right °F	Back °F	bottom °F	Top °F	Left °F
10	3 PIECE 21-21-20	391,83	69,40	69,70	432,71	2,77	98,42	102,38	237,87	95,55	114,70
20		390,37	69,52	69,69	640,64	11,78	143,88	140,71	248,03	137,90	165,88
30		379,95	69,63	69,62	739,01	11,27	164,41	158,74	259,92	169,61	176,01
40		384,35	69,65	69,67	738,19	10,78	176,91	171,01	295,19	194,33	179,05
50		390,10	69,60	69,64	688,74	10,29	184,79	183,01	321,90	206,09	180,84
60		397,33	69,51	69,80	694,53	9,77	188,44	193,71	355,36	215,54	182,65
70		398,73	69,69	70,04	683,90	9,37	188,94	203,18	393,81	230,51	184,55
80		304,58	70,01	70,18	759,07	8,88	192,80	212,00	396,70	230,40	187,19
90		308,91	69,62	70,33	736,43	8,37	196,94	221,28	400,96	249,34	191,89
100		305,47	69,63	70,22	703,28	7,84	209,62	230,51	394,98	265,10	197,81
110		310,35	70,14	70,34	684,63	7,37	219,88	238,87	372,03	274,34	205,34
120		322,37	70,40	70,36	707,71	6,87	236,18	249,05	348,13	298,60	218,88
130		327,95	70,64	70,64	738,63	5,97	257,13	264,39	339,01	325,70	234,78
140		334,60	70,60	70,63	741,89	5,48	276,34	281,98	365,41	352,70	258,48
150	3 PIECE 20-22-20	352,04	70,65	71,05	786,49	16,18	290,89	299,87	402,49	358,14	270,57
160		345,49	70,90	71,21	794,81	15,38	304,85	311,39	402,99	358,40	289,05
170		351,35	70,71	71,22	776,88	14,48	319,58	323,83	408,08	389,13	271,58
180		356,57	71,11	71,47	811,81	13,58	330,35	337,46	409,74	383,69	280,40
190		369,65	71,36	71,36	859,64	12,58	338,72	355,62	409,58	393,40	301,39
200		398,51	71,21	71,60	880,98	11,88	341,38	367,29	415,60	405,60	316,77
210		382,98	71,24	71,59	850,73	11,08	349,58	378,62	419,69	411,02	329,65
220		366,87	71,32	71,49	824,24	10,28	345,21	389,09	422,97	409,47	340,61
230		360,47	71,49	71,45	864,28	9,48	355,33	400,34	426,49	412,71	357,43
240		362,08	71,54	71,70	853,61	8,59	368,40	412,08	434,39	415,09	372,62
250		368,21	72,07	72,12	884,25	7,77	383,23	423,34	440,01	420,01	385,68
260		373,61	70,63	71,34	908,09	6,89	395,62	430,75	454,62	431,05	396,76
270		379,59	72,21	72,39	989,34	6,08	407,76	436,43	464,62	449,60	409,49
280		359,46	72,49	72,14	949,22	5,48	409,19	443,60	477,43	459,60	422,96
290		345,59	72,16	72,21	946,75	5,07	402,50	443,65	490,88	445,97	435,66
300		334,58	72,52	72,14	854,85	4,78	393,46	438,58	490,18	424,39	430,08
310		319,43	72,28	72,34	810,18	4,47	385,16	434,28	502,77	404,11	412,62
320	3 PIECES 22-22-21	311,82	72,36	72,38	776,64	4,17	377,08	427,77	506,96	385,50	407,81
330		297,49	71,57	71,89	792,03	19,98	368,32	420,65	518,39	368,66	402,42
340		307,81	72,11	72,07	975,49	19,38	339,65	397,62	485,02	350,40	380,79
350		338,64	72,07	72,04	1110,74	18,48	314,34	375,36	459,04	337,14	359,24
360		366,95	72,21	72,06	1080,92	17,38	299,43	362,93	441,13	344,75	345,03
370		373,85	72,22	72,19	1024,01	15,08	301,95	360,35	431,18	392,96	342,34
380		378,89	72,45	72,24	1014,29	14,08	317,49	365,40	423,45	435,60	346,73
390		382,07	72,62	72,57	1009,18	13,48	335,67	376,40	418,03	465,67	356,81
400		380,95	72,69	72,41	1000,00	12,18	357,71	390,60	413,88	489,17	370,80
410		360,91	72,67	72,45	983,01	11,08	377,59	408,89	404,71	505,34	385,49
420		349,95	72,60	72,44	972,29	10,18	390,75	418,90	400,61	505,13	397,91
430		335,30	72,63	72,39	925,82	9,48	404,21	427,33	398,92	498,33	407,59
440		315,48	72,76	72,38	884,23	8,88	408,43	430,62	397,98	485,73	411,54
450		310,94	72,73	72,31	980,64	8,54	406,58	428,80	402,44	467,79	408,76
460		310,65	72,58	72,33	970,78	8,09	398,47	425,61	408,62	444,28	404,44
470		312,45	72,62	72,28	1008,85	7,87	390,79	424,02	415,18	422,33	400,23
480		300,13	72,52	72,21	958,45	7,27	385,29	422,41	415,17	407,36	398,03
490		285,06	72,37	72,29	840,79	6,87	381,18	419,27	416,91	393,09	397,32
500		265,44	72,07	72,18	754,02	6,78	378,81	415,80	421,51	378,74	396,84
510		250,44	71,99	72,14	711,33	6,67	371,85	411,50	426,47	363,67	395,20
520		241,42	71,88	72,06	684,23	6,47	367,39	407,86	430,25	349,09	392,33
530		234,89	71,64	72,11	679,27	6,27	362,63	404,75	436,78	337,01	388,90
540		232,37	71,68	72,08	688,73	6,18	358,24	401,15	440,09	326,63	385,14
550		229,58	71,41	72,11	674,49	5,98	353,20	394,19	429,51	317,41	381,26
560		225,35	71,47	71,90	652,57	5,87	347,53	385,47	422,74	309,88	377,52
570		222,38	71,46	71,87	646,65	5,67	341,73	379,48	418,63	302,64	373,64
580		218,62	71,71	71,79	634,19	5,57	334,68	370,73	414,34	296,62	369,26
590		215,49	71,53	71,71	622,85	5,48	329,73	362,37	413,92	290,05	363,65
600		213,29	71,44	71,62	615,61	5,27	325,30	355,64	413,68	284,60	359,42
610		211,32	71,48	71,65	604,60	5,17	321,55	350,49	414,71	279,40	355,22
620		208,36	71,44	71,54	591,24	5,07	317,25	345,95	412,89	275,08	351,55
630		205,11	71,30	71,49	582,14	4,97	312,95	341,98	410,50	270,23	348,06
640		203,28	71,25	71,41	582,65	4,77	308,88	338,35	407,95	265,65	344,42
650		201,37	71,10	71,38	579,69	4,67	305,87	335,48	405,01	260,91	340,80
660		198,95	71,10	71,28	584,45	4,57	302,99	332,43	403,62	256,38	337,00
670		196,85	71,11	71,17	570,74	4,47	299,00	329,60	401,17	252,55	332,69
680		194,31	71,02	71,09	581,20	4,37	294,79	328,24	399,47	247,89	328,71
690		193,37	70,92	70,96	562,20	4,27	291,14	324,53	398,38	244,45	324,76
700		191,97	70,98	70,92	559,80	4,17	287,89	323,47	397,25	240,62	321,00
710		190,78	70,67	70,79	555,66	4,07	284,22	323,10	398,61	237,52	317,81
720		190,41	70,62	70,72	552,12	3,87	281,46	321,18	397,52	234,85	315,45
730		188,86	70,60	70,68	546,25	3,87	278,38	321,13	396,50	232,32	313,45
740		188,30	70,70	70,61	547,25	3,77	275,86	320,82	394,17	230,25	311,03
750		188,08	70,51	70,61	553,10	3,57	272,63	320,34	391,33	227,60	308,61
760		187,07	70,68	70,51	551,72	3,57	269,49	318,18	383,64	225,59	305,65
770		186,20	70,60	70,41	552,18	3,47	266,06	315,03	377,39	222,64	302,21
780		184,95	70,50	70,44	549,33	3,37	262,35	311,35	373,18	221,11	298,28
790		183,93	70,39	70,40	547,12	3,27	258,21	307,30	371,17	219,03	293,61
800		182,98	70,37	70,34	542,23	3,17	254,26	304,35	369,79	217,72	291,13
810		181,21	70,25	70,32	535,27	3,07	250,43	301,39	365,69	214,35	288,65
820		83,05	69,13	69,12	146,35	1,57	107,35	129,52	150,35	106,58	127,74
830	2 PIECES 21 20	213,09	69,18	69,34	199,78	3,94	107,08	128,44	226,97	108,48	136,60
840		408,80	69,59	69,67	461,13	2,87	128,22	145,07	285,62	121,39	166,01
850		351,39	69,40	69,03	800,89	12,48	170,32	185,94	325,27	189,03	211,68
860		335,03	68,97	69,19	804,51	11,78	202,60	208,64	352,23	213,71	223,81
870		351,23	69,02	69,39	821,04	10,88	217,36	223,62	383,50	248,27	226,70
880		344,75	69,25	69,57	821,95	9,97	254,19	248,43	397,67	278,75	231,77
890		347,31	69,18	69,50	987,74	9,27	276,10	260,61	374,10	301,30	237,94
900		369,00	69,11	69,47	1013,07	8,57	277,98	276,50	390,99	315,60	241,96
910		386,51	69,42	69,70	1101,67	7,87	273,46	292,18	400,31	318,22	242,88
920		385,18	69,19	69,66	1016,25	7,17	271,94	307,01	422,50	319,60	242,51
930		360,38	69,59	70,20	883,74	6,78	275,61	320,66	436,54	322,72	243,89
940		336,84	69,71	70,28	812,71	6,37	279,51	328,18	449,18	319,21	245,18
950		330,73	69,78	70,38	809,17	5,97	282,57	331,07	465,21	312,37	245,87
960		337,43	69,19	69,95	887,73	5,57	284,39	332,39	473,03	304,34	244,18
970		340,77	70,00	70,38	908,59	4,77	297,98	335,28	432,17	307,88	251,52
980		348,52	65,73	67,30	889,63	3,87	306,12	347,79	408,79	345,63	281,60
990		328,50	65,07	65,64	827,49	3,47	310,27	363,13	421,33	368,64	311,38
1000		311,90	63,64	65,37	775,87	3,17	321,91	369,80	425,60	366,73	320,02
1010		297,43	64,43	65,35	757,39	2,87	317,41	367,58	434,75	355,71	320,38
1020		294,50	67,37	68,24	774,23	2,57	314,49	365,27	448,68	349,88	324,58
1030		290,55	66,77	67,21	714,80	2,37	309,89	363,13	485,01	338,21	325,00
1040	3 PIECES 19-19-19	288,80	66,50	66,34	714,31	2,37	303,89	359,74	481,01	335,89	324,53

1050		335,35	69,96	69,50	903,46	16,06	294,76	355,14	471,03	311,08	330,81
1060		363,85	69,40	70,01	983,85	15,06	301,24	347,60	446,94	304,72	312,07
1070		373,58	67,85	68,07	927,81	14,06	302,13	349,85	436,17	308,92	309,89
1080		375,95	69,63	70,34	976,83	12,96	290,21	357,43	428,97	328,51	328,62
1090		375,40	69,54	70,34	910,79	12,16	293,17	365,34	427,41	347,22	309,76
1100		368,57	69,65	70,45	900,05	11,17	303,34	378,41	433,33	368,19	321,44
1110		362,39	69,94	70,08	881,73	10,38	314,94	393,03	436,73	392,01	336,45
1120		348,08	70,11	70,73	1113,78	9,49	320,92	403,92	446,27	388,02	345,07
1130		357,02	70,26	70,88	1092,88	8,70	316,97	411,26	456,42	385,79	344,38
1140		348,97	70,24	71,04	1083,62	7,97	315,17	416,01	466,42	377,73	345,62
1150		359,97	70,36	71,07	990,84	7,27	322,36	420,73	478,30	381,10	350,37
1160		353,96	70,80	71,06	934,53	6,57	339,60	425,73	481,17	388,11	364,89
1170		344,85	67,03	68,24	934,29	5,87	349,04	429,38	479,44	393,61	376,96
1180		338,28	65,46	65,59	809,74	5,27	351,89	429,96	479,79	393,64	384,25
1190		356,74	69,46	70,21	1218,53	4,57	353,01	433,33	480,03	390,63	389,25
1200		366,47	70,13	70,63	983,49	4,17	347,58	436,38	485,25	386,95	385,10
1210	3 PIECES 22-21-22	326,57	66,06	66,41	832,27	3,89	341,40	432,94	486,57	382,45	381,34
1220		338,85	69,94	70,79	798,42	15,28	336,30	423,93	478,96	388,74	376,48
1230		349,43	70,43	70,89	872,46	14,28	339,86	407,85	444,51	395,23	371,25
1240		358,76	70,65	70,90	988,04	13,18	335,45	400,53	430,06	399,35	376,98
1250		375,88	71,46	71,06	946,73	13,18	350,63	408,59	420,55	416,21	388,37
1260		366,97	70,58	70,33	1026,63	11,08	365,46	415,66	413,63	441,53	403,03
1270		367,33	71,71	71,42	961,21	9,99	385,50	430,27	410,63	459,66	426,50
1280		377,87	71,99	71,66	912,25	9,07	402,30	450,26	408,89	470,44	442,43
1290		368,03	69,36	69,63	879,05	8,35	411,91	461,61	411,17	467,60	453,37
1300		332,11	66,74	67,54	861,63	7,48	417,12	469,26	413,45	458,69	459,43
1310		346,46	65,91	66,37	887,41	6,97	413,53	471,24	414,44	449,64	460,65
1320		335,22	65,47	66,35	851,96	6,57	401,34	465,91	406,57	431,35	456,60
1330	3 PIECES 21-22-22	360,10	66,07	66,46	944,07	16,58	389,60	452,74	409,66	410,29	440,65
1340		364,17	68,64	69,22	995,25	15,38	371,72	429,96	401,44	415,09	432,30
1350		361,27	69,62	70,44	1113,14	14,48	362,38	409,62	390,26	428,68	407,53
1360		357,10	70,36	70,55	1017,85	13,38	359,96	400,48	381,34	434,43	396,24
1370		359,06	70,60	71,02	982,13	12,18	369,61	400,35	373,13	455,67	396,86
1380		355,19	71,54	71,13	966,20	11,08	383,65	405,60	366,15	478,60	403,19
1390		344,86	71,73	71,45	976,13	10,18	396,76	413,01	362,11	490,63	410,40
1400	5 PIECES 21-21-21-22-24	326,57	71,96	71,74	985,61	9,48	410,56	418,96	360,28	491,15	416,65
1410		358,76	71,60	71,65	980,13	25,28	399,69	419,47	358,03	478,24	407,44
1420		344,98	71,60	71,86	1049,31	24,38	369,04	405,77	349,32	472,63	377,96
1430		350,38	71,81	71,94	1134,45	23,63	343,63	391,37	340,17	451,21	352,67
1440		371,66	72,04	71,94	1178,07	22,66	325,74	383,17	344,37	430,62	335,45
1450		368,56	72,06	72,30	1237,35	21,56	318,34	381,31	346,85	421,32	325,11
1460		350,84	72,10	72,21	998,45	19,68	315,66	388,72	350,31	431,36	323,69
1470		366,69	72,26	72,30	1016,13	18,38	327,47	398,53	348,63	450,60	331,39
1480		374,62	72,49	72,42	1019,46	17,18	344,26	411,56	345,42	484,49	343,78
1490		370,67	72,61	72,66	1014,60	16,06	361,58	423,73	342,25	499,52	355,37
1500		363,57	72,73	72,66	1004,59	14,96	377,15	433,66	336,65	508,19	366,45
1510		344,98	72,69	72,75	984,63	14,08	390,94	440,63	336,77	511,41	376,67
1520		336,73	72,61	72,71	969,47	13,28	401,34	446,01	335,13	506,49	386,13
1530		318,57	72,64	72,66	933,49	12,78	407,49	448,67	333,64	496,61	392,64
1540		311,90	72,60	72,64	979,13	12,26	406,05	444,41	334,38	486,66	398,70
1550		306,75	72,41	72,59	896,21	11,86	403,59	439,03	338,03	466,61	394,21
1560		295,12	72,44	72,55	807,67	11,73	396,52	433,50	343,37	442,11	390,47
1570		272,21	72,29	72,43	750,24	11,48	395,66	426,64	347,68	420,03	387,62
1580		261,61	72,41	72,37	754,21	11,28	393,17	419,17	347,96	403,06	385,61
1590		253,73	72,30	72,36	736,21	11,08	390,60	411,13	348,01	392,57	383,13
1600		245,63	72,27	72,28	722,65	10,88	388,26	404,33	352,64	389,73	381,14
1610		241,57	72,26	72,28	730,19	10,77	386,14	396,74	356,37	359,65	379,62
1620		237,93	72,04	72,30	710,26	10,57	384,49	393,91	359,01	346,65	378,58
1630		233,90	72,07	72,24	690,21	10,38	383,69	389,64	361,24	337,60	377,36
1640		232,44	71,98	72,26	690,61	10,18	382,65	387,38	366,52	331,40	376,24
1650		230,21	71,97	72,19	680,59	9,89	382,96	384,80	369,42	326,04	375,89
1660		226,30	71,94	72,20	658,08	9,67	382,75	383,78	375,02	322,01	375,60
1670		223,33	71,76	72,10	650,40	9,60	381,37	384,43	380,01	317,34	375,34
1680		218,68	71,65	72,17	633,25	9,49	378,36	388,66	386,21	313,49	375,15
1690		218,25	71,65	72,19	670,72	9,34	373,26	389,66	387,97	308,26	375,41
1700		220,16	71,75	72,15	671,60	9,17	367,91	388,60	380,97	306,63	374,70
1710		218,39	71,59	72,08	664,40	9,07	362,26	385,58	378,15	304,33	374,03
1720		218,10	71,69	72,18	653,04	8,89	359,51	382,01	375,68	301,26	373,28
1730		215,47	71,52	72,18	642,18	8,80	355,20	378,91	374,32	298,11	373,04
1740		214,63	71,43	72,15	649,43	8,57	350,43	376,00	371,96	295,23	372,65
1750		213,40	71,56	71,97	640,59	8,47	347,10	373,27	369,69	292,22	371,73
1760		211,61	71,52	72,07	635,75	8,29	344,80	370,80	366,94	289,27	370,50
1770		211,08	71,46	72,02	638,55	8,18	342,34	369,06	368,33	287,18	369,26
1780		210,18	71,49	72,03	633,62	7,97	340,60	367,49	364,23	284,67	368,49
1790		213,63	71,39	71,95	640,74	7,87	340,16	364,02	360,06	282,30	367,57
1800		211,97	71,36	71,95	643,74	7,73	341,12	361,25	358,28	281,12	366,73
1810		210,32	71,33	71,94	635,46	7,58	340,96	357,52	350,06	278,43	366,63
1820		208,42	71,36	71,77	630,22	7,47	340,11	354,10	344,33	277,01	365,66
1830		207,49	71,15	71,72	625,22	7,34	337,40	351,04	341,01	274,35	365,13
1840		208,96	71,19	71,73	630,35	7,17	335,10	348,36	338,93	273,07	363,76
1850		206,61	71,10	71,73	621,79	6,97	332,25	345,92	338,91	270,66	361,90
1860		205,39	71,17	71,63	616,32	6,88	328,34	344,01	340,38	268,37	357,70
1870		204,40	71,03	71,63	611,43	6,77	325,41	342,66	347,71	266,15	355,61
1880		203,35	70,94	71,57	620,94	6,57	322,15	341,97	351,33	263,66	354,44
1890		202,32	70,91	71,57	615,69	6,47	318,76	341,18	353,73	262,66	353,40
1900		201,90	70,96	71,49	611,53	6,37	315,60	340,63	354,19	260,91	352,18
1910		200,21	70,86	71,46	606,67	6,18	312,69	340,64	355,57	259,71	350,71
1920		198,51	70,89	71,33	600,11	6,07	310,21	341,02	355,69	257,71	349,40
1930		197,73	70,76	71,43	600,03	5,97	306,94	339,59	348,03	256,27	347,76
1940		195,79	70,67	71,35	590,35	5,87	302,94	337,03	344,40	254,33	346,26
1950		194,37	70,60	71,26	589,61	5,67	299,42	334,70	341,65	252,14	344,75
1960		190,92	70,71	71,21	584,59	5,57	295,60	333,90	339,10	249,73	343,00
1970		190,77	70,55	71,19	585,74	5,47	292,42	331,39	337,41	247,36	339,45
1980		189,92	70,50	71,06	582,07	5,37	288,94	328,67	336,15	244,37	335,61
1990		188,53	70,43	71,07	585,34	5,27	285,61	325,61	330,58	241,59	333,50
2000		187,80	70,40	70,84	587,95	5,17	282,22	323,14	328,40	239,03	331,12
2010		186,11	70,40	70,92	586,67	5,07	280,26	321,15	327,85	236,73	329,70
2020		186,07	70,27	70,76	583,44	4,87	277,34	319,63	326,43	234,61	328,80
2030		185,94	70,22	70,81	557,77	4,87	275,60	318,34	325,01	232,95	327,79
2040		184,65	70,07	70,69	551,60	4,70	273,69	317,10	324,22	231,31	326,60
2050		184,08	70,08	70,80	548,69	4,57	272,30	316,12	323,42	229,77	325,42
2060		182,94	69,69	70,80	546,61	4,47	270,57	314,61	322,43	228,94	323,91
2070		181,90	69,66	70,50	540,13	4,37	268,14	313,60	321,33	226,80	322,61
2080		180,16	69,67	70,44	526,17	4,27	266,34	311,23	318,66	224,66	321,10
2090		68,51	66,19	66,59	66,20	2,57	66,33	67,91	66,10	66,60	66,02
2100	2 PIECES 21-21	118,58	66,21	66,76	133,06	1,37	66,73	69,36	93,21	66,73	66,27
2110		175,61	68,37	68,79	173,71	9,27	81,35	77,37	131,60	75,47	79,16
2120		203,70	68,40	69,62	187,36	8,86	96,47	86,70	166,43	81,55	90,21

2130		198,15	69,52	69,07	393,16	8,29	113,80	108,59	218,52	109,49	116,81
2140		253,03	69,71	69,18	861,88	7,59	134,91	130,24	301,10	128,94	142,19
2150		287,97	69,75	69,21	880,93	6,88	154,60	155,48	338,90	150,02	163,86
2160		288,50	69,69	69,33	871,63	6,27	171,19	178,63	384,65	175,26	180,88
2170		293,48	69,07	69,66	859,13	5,77	187,77	194,38	416,71	196,63	193,62
2180		288,40	69,15	69,60	888,75	5,27	208,94	213,14	446,51	214,04	207,14
2190		337,88	69,33	69,63	889,63	4,77	217,80	229,96	436,94	233,61	215,94
2200		331,29	69,49	70,09	867,85	4,67	219,84	241,53	433,96	238,21	228,80
2210	3 PIECES 21-22-23	321,31	69,71	70,10	794,09	3,47	235,46	258,88	424,09	258,58	255,04
2220		336,95	69,60	70,35	853,84	13,38	249,30	273,78	427,60	273,12	271,88
2230		363,11	70,13	70,63	865,17	12,38	246,71	287,77	411,88	279,84	286,11
2240		389,60	70,35	70,78	921,79	11,38	267,35	305,35	417,21	301,39	270,50
2250		407,54	70,79	71,07	971,12	10,08	293,14	329,58	422,11	341,11	289,04
2260		405,13	71,11	71,26	991,70	8,88	313,85	364,63	433,38	393,87	333,80
2270		395,10	71,05	71,43	975,41	7,77	341,32	393,32	424,53	422,94	351,95
2280		380,36	71,58	71,80	949,69	6,88	371,83	415,13	430,93	433,17	371,41
2290		373,45	71,85	71,88	931,63	6,08	393,19	430,03	446,07	434,62	389,88
2300		367,55	72,11	72,02	858,79	5,18	408,35	441,63	446,18	435,03	404,86
2310		355,78	72,04	71,88	792,88	4,81	418,32	449,88	460,05	433,03	415,57
2320		349,03	71,78	71,84	838,80	4,27	408,91	453,58	477,45	435,27	419,03
2330		343,98	72,17	72,07	821,79	3,87	396,60	453,38	498,08	414,33	419,88
2340		339,07	71,88	72,08	779,28	3,27	394,30	449,20	518,88	400,08	421,83
2350		324,79	71,80	72,10	767,27	2,90	389,15	443,09	533,54	396,03	433,58
2360		308,11	69,70	69,79	753,58	2,87	380,11	437,31	543,34	370,08	414,81
2370		296,23	67,64	69,13	863,93	2,57	370,31	409,88	546,73	355,80	406,22
2380		289,10	67,27	67,64	888,64	2,27	359,14	415,46	545,39	337,65	397,35
2390		283,14	67,22	65,85	650,32	2,17	349,10	403,70	541,53	324,38	388,53
2400		278,20	66,33	66,24	640,53	2,03	339,73	393,07	534,19	313,82	381,83
2410	6 PIECES 21-22-22-21-23-23	273,67	67,10	66,44	626,45	1,87	328,63	380,73	527,41	302,85	375,50
2420		341,39	66,63	67,35	533,27	28,48	315,82	370,81	519,97	293,40	368,44
2430		258,18	66,20	66,63	987,85	27,69	286,37	350,04	484,42	288,48	336,17
2440		227,30	65,66	66,94	1047,83	26,52	261,43	331,11	466,37	267,48	308,26
2450		273,18	65,73	66,67	1115,71	25,20	247,30	323,94	447,68	270,42	284,08
2460		303,86	66,35	69,47	1044,87	23,66	245,23	327,23	440,14	309,53	273,73
2470		369,56	69,61	70,23	1039,78	22,38	249,10	333,62	436,25	375,67	270,52
2480		395,45	69,73	70,40	1051,61	20,88	256,85	343,85	418,62	431,94	275,07
2490		398,68	70,09	70,62	1041,57	19,38	275,06	356,33	403,35	472,46	289,49
2500		391,37	70,44	71,24	1030,60	17,88	299,15	370,43	385,14	501,22	303,76
2510		393,37	70,71	71,89	1043,81	16,58	324,77	383,60	372,03	519,29	320,50
2520		388,66	71,21	72,12	1034,30	15,25	350,09	396,01	369,08	531,69	336,48
2530		381,38	71,22	72,34	1025,45	14,01	372,24	408,09	353,96	539,39	353,56
2540		358,03	71,43	72,27	987,58	13,18	389,58	418,85	356,22	535,70	368,01
2550		340,58	71,66	72,31	981,24	12,38	391,35	420,66	353,68	517,96	373,86
2560		338,54	71,65	72,31	974,17	11,58	392,11	423,38	368,04	500,01	377,71
2570		331,63	71,61	72,33	971,95	10,88	392,40	423,45	367,03	480,67	382,04
2580		333,63	71,80	72,43	967,52	10,18	393,59	424,40	368,45	469,05	389,60
2590		318,60	71,96	72,53	986,13	9,57	395,84	423,63	368,18	464,58	390,48
2600		309,81	71,85	72,57	921,95	9,07	393,85	423,89	373,13	457,93	392,95
2610		318,62	72,02	72,64	1013,43	8,57	376,65	422,60	383,02	454,73	393,16
2620		308,32	71,89	72,74	919,09	8,18	373,97	422,03	395,18	432,17	397,79
2630		288,66	71,63	72,65	835,69	7,87	369,86	418,50	410,05	412,11	384,65
2640		288,76	71,60	72,60	788,97	7,87	366,60	414,65	423,38	394,27	384,43
2650		253,37	71,64	72,48	732,59	7,49	366,03	409,34	426,18	377,25	384,64
2660		240,01	71,66	72,43	701,24	7,27	365,03	403,35	431,03	361,61	384,24
2670		236,08	71,67	72,38	680,00	7,13	363,34	398,35	431,76	346,65	382,66
2680		231,17	71,73	72,31	670,56	6,87	360,19	394,38	432,23	334,69	382,01
2690		227,13	71,71	72,30	660,46	6,79	356,01	391,01	430,10	323,73	381,81
2700		223,17	71,65	72,28	655,33	6,67	352,61	387,65	431,14	314,49	381,22
2710		219,66	71,65	72,20	646,76	6,47	346,26	384,60	430,20	306,29	376,80
2720		217,35	71,68	72,17	641,19	6,35	343,92	383,08	428,75	300,59	375,83
2730		215,11	71,71	72,14	645,05	6,18	340,56	378,24	427,70	293,78	372,30
2740		214,64	71,82	72,14	640,65	6,07	336,47	374,18	425,35	289,15	368,70
2750		211,98	71,79	72,11	631,85	5,87	332,34	369,03	423,46	284,32	365,18
2760		208,33	71,80	72,01	625,33	5,77	328,61	365,08	421,59	279,71	361,34
2770		206,55	71,77	72,00	614,79	5,67	325,04	361,27	421,03	275,34	357,30
2780		204,08	71,48	71,94	613,64	5,48	321,12	358,19	421,30	270,64	353,43
2790		201,88	71,66	71,92	601,90	5,37	317,11	354,07	418,54	267,61	349,78
2800		200,88	71,71	71,81	602,29	5,27	314,11	352,28	416,14	264,49	346,57
2810		200,88	71,64	71,75	603,31	5,17	312,30	350,39	418,64	261,67	343,59
2820	3 PIECES 21-20-21	190,02	69,57	69,69	227,11	1,27	143,26	177,64	208,93	138,62	184,40
2830		219,21	69,61	70,29	660,57	11,67	159,74	188,40	279,52	148,66	191,07
2840		324,49	69,41	70,03	735,20	11,08	177,32	204,79	360,80	188,60	205,29
2850		340,13	69,41	70,07	767,95	10,18	193,65	227,13	481,98	212,60	222,30
2860		354,45	69,80	70,53	805,18	9,49	200,13	246,24	526,01	234,65	240,80
2870		347,33	69,91	70,57	877,81	8,79	206,26	263,49	371,09	246,13	254,38
2880		353,08	69,66	70,69	839,60	8,18	206,25	274,09	390,78	259,13	257,07
2890		353,51	70,09	70,63	866,75	7,67	205,87	278,67	540,30	261,43	254,39
2900		365,17	70,20	70,86	894,67	7,07	203,61	282,08	533,03	260,95	251,49
2910		373,30	70,30	71,07	908,34	6,47	203,04	288,01	521,08	262,91	249,30
2920		402,47	70,45	71,43	1034,97	5,77	205,17	293,50	531,18	267,63	248,65
2930		426,45	70,44	71,62	1091,45	5,05	210,45	305,01	536,09	270,79	252,10
2940		433,90	70,74	71,88	968,60	4,17	219,80	321,79	546,88	293,04	259,30
2950	3 PIECES 22-23-21	421,32	70,86	71,96	590,01	17,78	261,59	344,71	504,44	331,23	284,52
2960		384,13	73,61	72,67	1029,45	9,27	303,66	368,03	479,23	406,59	370,81
2970		389,53	73,61	73,02	1008,51	8,18	391,19	408,98	479,07	430,60	389,65
2980		388,95	73,66	73,12	974,59	7,38	390,65	408,19	486,14	453,03	405,40
2990		374,63	73,64	73,20	967,28	6,65	392,43	447,01	495,05	462,21	416,05
3000		367,24	73,69	73,43	913,28	6,08	389,67	460,08	496,71	455,71	431,39
3010		368,23	73,61	73,96	900,60	5,57	385,67	458,78	538,01	439,55	435,09
3020		361,88	72,94	73,96	889,80	5,07	380,61	451,35	547,84	419,07	431,94
3030		346,61	73,66	73,73	888,21	4,79	376,67	444,64	538,60	404,21	426,67
3040		343,31	72,69	74,06	912,40	4,37	371,88	436,42	540,31	389,21	425,57
3050		316,47	72,80	74,01	726,45	4,09	369,38	427,64	546,01	374,67	421,64
3060		304,44	72,61	74,03	692,24	3,87	366,60	418,00	545,10	360,05	417,84
3070		290,02	73,04	73,94	664,44	3,67	362,30	409,98	546,65	345,40	413,45
3080		285,08	72,96	73,96	647,25	3,57	357,88	403,33	552,69	332,39	407,94
3090		280,18	73,38	73,61	637,92	3,38	353,49	396,53	557,14	320,24	403,18
3100		335,55	73,57	73,95	947,55	12,98	349,85	369,01	538,19	311,04	398,03
3110		390,97	73,55	75,83	1186,13	12,08	350,65	376,30	506,64	302,62	388,64
3120		436,31	74,04	75,04	1130,63	11,08	353,10	381,78	494,68	309,03	374,63
3130		429,54	74,09	75,18	1033,32	9,59	350,77	405,96	491,38	366,45	390,44
3140		419,54	74,06	75,37	1009,25	8,37	356,30	438,04	494,58	407,57	430,16
3150		401,48	74,20	76,02	909,11	7,39	390,43	473,05	487,02	434,63	462,38
3160		395,08	74,60	76,73	880,29	6,47	419,62	494,39	499,28	446,18	476,81
3170		375,68	75,34	77,23	873,71	5,87	441,11	509,97	491,48	451,21	487,79
3180		358,88	75,57	77,78	821,27	5,07	453,71	516,49	494,78	447,39	490,67
3190		341,58	75,89	77,64	780,65	4,77	451,87	517,86	501,28	437,48	489,53
3200		328,39	76,22	77,41	750,96	4,47	458,10	508,78	510,41	419,60	480,27

3210	312,60	76,22	77,17	716,21	4,27	423,26	498,51	517,40	399,23	458,49
3220	302,09	76,52	77,57	692,05	4,08	411,86	463,73	519,18	380,09	456,64
3230	294,54	76,39	77,94	676,94	3,87	400,60	471,39	522,19	362,19	446,12
3240	290,23	76,51	78,08	663,60	3,77	392,97	461,03	521,40	348,24	436,96
3250	284,37	76,62	78,07	647,46	3,57	385,83	451,03	519,84	336,25	428,34
3260	277,80	76,59	77,90	633,92	3,47	379,01	441,74	518,22	325,11	420,30
3270	275,37	76,25	77,83	626,36	3,30	370,84	433,85	514,71	316,88	413,73
3280	271,54	76,64	77,96	629,38	3,27	364,47	427,83	511,88	310,30	409,11
3290	269,67	76,41	77,97	674,22	2,87	357,13	422,15	512,63	303,22	404,38
3300	235,04	75,94	77,53	694,98	2,88	355,01	423,37	532,21	300,06	405,86
3310	333,51	75,40	77,36	688,60	2,47	354,62	427,38	527,55	299,89	411,22
3320	329,51	75,27	77,51	682,31	2,57	353,40	423,34	508,38	299,04	412,17
3330	322,58	75,35	77,44	635,05	2,37	348,83	413,32	498,85	295,42	408,01
3340	318,10	75,33	77,32	624,76	2,27	342,54	402,84	503,25	291,30	402,17
3350	313,20	75,51	77,18	620,18	2,07	335,10	394,17	495,13	288,33	396,95
3360	304,71	75,04	77,03	580,61	1,97	326,30	388,00	489,60	281,23	392,44
3370	298,44	74,92	76,83	576,15	1,77	317,15	377,19	488,59	276,15	386,83
3380	298,86	74,88	76,67	554,22	1,67	307,27	368,08	488,73	270,96	379,51
3390	283,30	74,46	76,46	540,95	1,57	298,58	358,82	492,39	265,25	371,73

APPENDIX 5: Participants

Danick Power ing.
v-p operation
Services Polytests inc.
450.741.3636
www.polytests.com

Maxime Martin
Technicien
Services Polytests inc.
450.741.3636
www.polytests.com

APPENDIX 6: Drawings and specifications

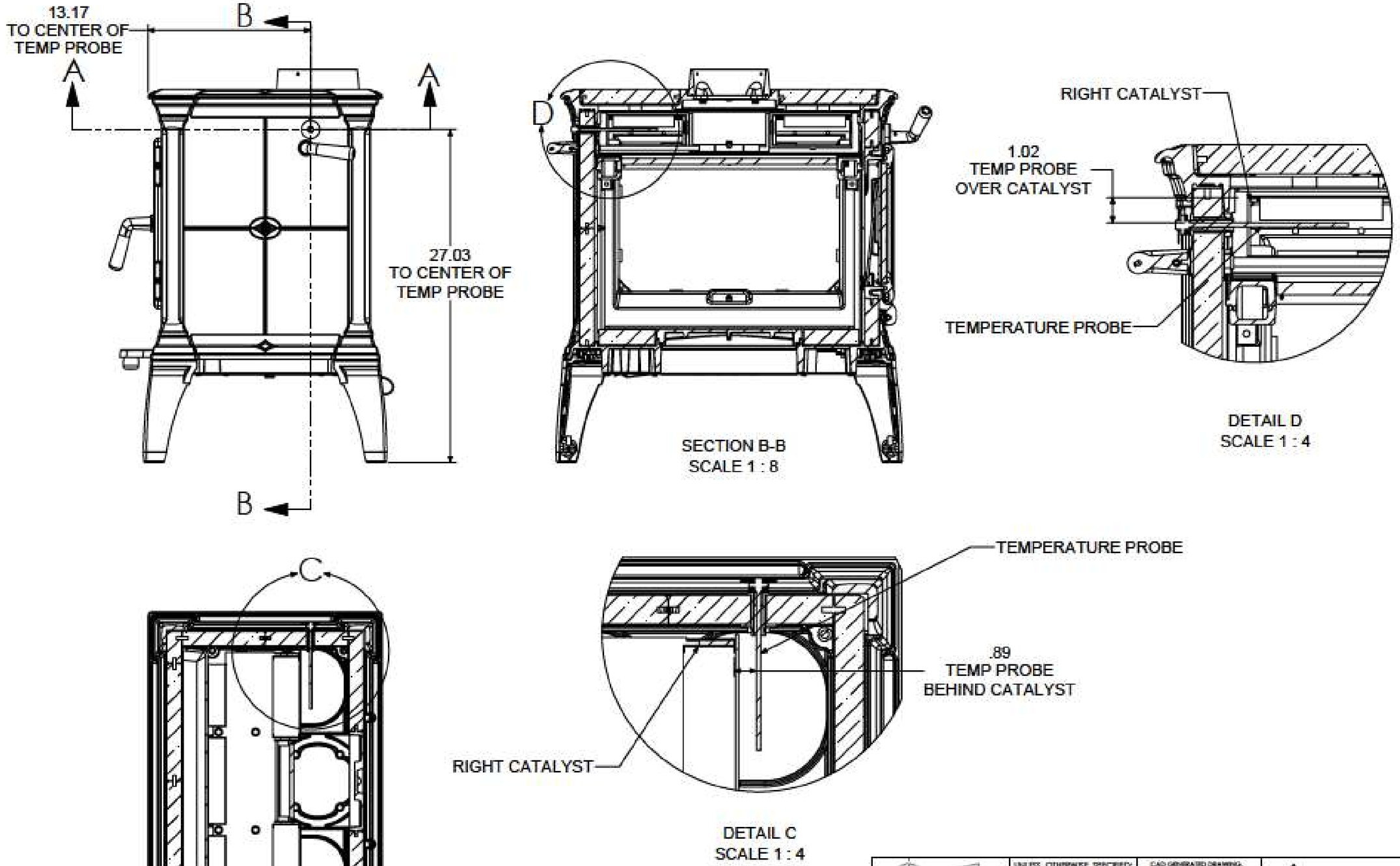

SECTION B-B
SCALE 1 : 8

DETAIL D
SCALE 1 : 4

SECTION A-A
SCALE 1 : 8

DETAIL C
SCALE 1 : 4

WEIGHT:

REVISIONS				
ECO	REV.	DESCRIPTION	DATE	APPROVED

VIEWS ARE THIRD ANGLE

This document submitted by HearthStone is the property of HearthStone and may contain information of a proprietary nature and shall not be copied or duplicated in whole or in part or used in whole or in part for any purpose other than that which is necessary for the preparation of bids or fabrication. Please return to HearthStone.

UNLESS OTHERWISE SPECIFIED:
TOLERANCES ARE:
FRACTIONS ± 1/64 DECIMALS .XX ± .015 .XXX ± .005 ANGLES ± 1/4°

1.) DIMENSIONS ARE IN INCHES / MM
2.) ALL MACHINED SURFACES TO BE DE-BURRED AND SMOOTHED

MATERIAL:

FINISH:

CAD GENERATED DRAWING, DO NOT MANUALLY UPDATE

APPROVALS	DATE
DRAWN CFM	2/24/2021
CHECKED	
RESP ENG	
MFG ENG	
QUAL ENG	

hearthstone

8024 HERITAGE

TEMPERATURE PROBE DIMS

SIZE B | HEARTHSTONE DWG. NO. 8024 | REV. 1

SCALE 1:12 | HEROGAN DWG. NO. | SHEET 1 OF 1

dweitzWednesday, February 24, 2021 12:05:09 PM dweitzC:\Users\dweitz\Documents\8024 Heritage\

APPENDIX 7: Operator's manual

hearthstone

Heritage IV

(Model 8024)
Woodstove



OWNER'S MANUAL

Installation And Operating Instructions

NATIONAL FIREPLACE INSTITUTE

We recommend that our products be installed and serviced by professionals who are certified in the U.S. by NFI (National Fireplace Institute), or by W.E.T.T. (Wood Energy Technology Transfer) in Canada.
www.nficertified.org
www.wettinc.ca

PFS C US

SAVE THIS OWNER'S MANUAL FOR FUTURE REFERENCE

FILE # F18-307

PLEASE READ THIS ENTIRE OWNER'S MANUAL BEFORE YOU INSTALL AND USE YOUR NEW HERITAGE 8024 WOOD STOVE.

Ce manuel est disponible en français sur hearthstonetech.com

If this room heater is not properly installed, a house fire may result.
To reduce the risk of fire, follow the installation instructions.
Failure to follow these instructions can result in property damage, bodily injury, or even death.
Conforms to UL Std. 1482-2022
Certified to ULC Std. S627-2023

CONTACT LOCAL AUTHORITIES WITH JURISDICTION (BUILDING DEPARTMENT or FIRE OFFICIALS), ABOUT PERMITS REQUIRED, RESTRICTIONS AND INSTALLATION INSPECTION IN YOUR AREA.

California Prop 65

⚠ WARNING: This product can expose you to chemicals including glass wool fiber and carbon monoxide which are known to the State of California to cause cancer, birth defects or other reproductive harm. For more information go to www.P65Warnings.ca.gov

NOTES ON STOVE OPERATION AND EFFICIENCY

Rating:

You have purchased a Hearthstone Heritage 8024 tested to EPA Method 28R 40 CFR Part 60 where applicable. This stove is certified to comply with the U.S. Environmental Protection Agency 2020 particulate emissions standard using crib wood. It is certified at 1.1 gr/hr. emission rate and under specific test conditions has been shown to deliver heat at rates ranging from 12,869 to 29,191 Btu/hr (output) when using Douglas Fir test wood.

This wood heater has a manufacturer-set minimum allowable low burn rate that must not be altered. It is against federal regulations to alter this setting or otherwise operate this wood heater in a manner inconsistent with operating instructions in this manual.

Please refer to the Warranty section of this manual for registration instructions. In case of warranty claims, please contact the point of original sale or the nearest authorized Hearthstone dealer. Our dealer network processes all warranty claims. Authorized Hearthstone dealers can be located at www.hearthstonestoves.com.

This heater is designed to burn natural wood only. Higher efficiencies and lower emissions generally result when burning air-dried seasoned hardwoods, as compared to softwoods or to green or freshly cut hardwoods. **DO NOT BURN**: *Garbage, lawn clippings, material containing rubber (including tires), materials containing plastic, waste petroleum products paints or paint thinners, asphalt products, materials containing asbestos, construction or demolition debris, railroad ties, pressure treated wood, manure or animal remains, salt water driftwood or other previously salt water saturated materials, unseasoned wood, paper products, cardboard, plywood or particleboard.* This prohibition against burning these materials does not prohibit the use of fire starters made from paper, cardboard, sawdust, wax and similar substances for the purpose of starting a fire in an affected wood heater. Burning these materials may result in a release toxic fumes, render the heater ineffective, cause smoke and may damage catalysts.

Following the maintenance guidelines set forth in this manual will help insure the efficient use of your wood heater and minimize visible emissions. Having your stove inspected by a trained professional on a regular basis will greatly increase the potential for recognizing possible impacts to efficiency.

Proper draft is important to the efficient operation of your heater. Refer to the Normal Operation section of this manual for information regarding adequate draft. Both excessive and sub-minimum draft can affect the efficiency of your wood heater. Excessive draft can lead to over-consumption of fuel, lower overall heating capacity of the stove and potential over firing. Low draft can result in inefficient burns, low heat output, expulsion of smoke into the living area when stove doors are opened and an increased potential for build-up of flammable materials in the flue.

Efficiency:

Efficiency was measured and weighted using EPA Method 28R and CSA B415-10 methodology. A weighted average was used to calculate the overall efficiency across all of the 4 burn rate categories using the higher heating value (HHV). The weighted average efficiency is 77.3% (HHV).

To maximize the efficiency of your wood stove make sure it is sized properly for the space you plan to heat. An oversized stove will often be forced to burn at a lower and dirtier burn rate. Consult with your dealer for sizing and correctly placing the stove in your home. An incorrectly placed stove can greatly reduce efficiency. Maximizing the efficiency of your stove will heat your house quickly, burn cleaner and use less wood.

Refer to the Choosing Firewood section of this manual for appropriate fuel selection. Seasoned firewood is typically at or near 20% moisture content. This can be measured with any number of hand-held moisture meters available through your local hearth shop. Follow instructions included with the meter you purchase to measure fuel wood moisture content. Burn only dry, seasoned wood as using wet wood will greatly reduce your efficiency.

CO Emissions:

The Heritage 8024 has the following CO emission rates by burn level: Category 1 (low) – 0.11 g/min, Category 2 (med. low) – 0.25 g/min, Category 3 (med. high) – 0.10 g/min, and Category 4 – 4.12 g/min. Wet wood or unapproved fuel described above can greatly affect the emissions of a wood burning stove.

Smoke/Fire/CO Detectors:

It is highly recommended that smoke and CO detectors be installed throughout the heated space when a wood burning heater is installed. Be certain to install these devices not only in the area where the wood appliance is located, but also in bedrooms, hallways leading to other areas of the house and all common areas of the heated space. Check the batteries in these devices and assure operation by performing whatever test operations are recommended by the manufacturer.

TABLE OF CONTENTS

INTRODUCTION 4
CODES 4
SAFETY INFORMATION 4
PERIODIC CHECKLIST 5
EMERGENCY PROCEDURES 6

SPECIFICATIONS 7

INSTALLATION 8
UNPACKING 8
PACK LIST 8
INSTALLING YOUR STOVE 8
HEARTH REQUIREMENTS & FLOOR PROTECTION 9
COMBUSTIBLE SURFACE REQUIRED CLEARANCES 10
CHIMNEY CONNECTOR SYSTEMS AND CLEARANCES FROM COMBUSTIBLE WALLS 12
OUTSIDE AIR SUPPLY 13
TOP TO REAR VENTING CONVERSION 13
VENTING COMPONENTS & CONFIGURATION REQUIREMENTS 14
INSTALLING IN A MOBILE HOME 19

OPERATION 20
CONTROLS AND FEATURES 20
BUILDING A FIRE 23
BREAKING IN YOUR WOOD STOVE 23
NORMAL OPERATION 24
CATALYTIC COMBUSTOR OPERATION 24

MAINTENANCE 26
CATALYTIC COMBUSTOR INSPECTION AND REPLACEMENT PROCEDURES 26
INSPECTING THE CATALYST 26
REMOVING OR REPLACING THE CATALYST 27
REMOVING/REPLACING THE REAR BAFFLE 28
GLASS REPLACEMENT PROCEDURES 29
CREOSOTE FORMATION & REMOVAL 30
GASKETS 30
GLASS 30

TROUBLESHOOTING 31
TROUBLESHOOTING GUIDE 32
REPLACEMENT PARTS & OPTIONAL ACCESSORIES 34

SAFETY LABEL 35

LIMITED WARRANTY 36

INTRODUCTION

Thank you for purchasing a Heritage 8024 woodstove from Hearthstone Quality Home Heating Products. This stove will provide years of comfortable heat. This stove combines the warmth and comfort of soapstone and cast iron with the efficiency of advanced catalytic technology. The Heritage 8024 blends modern technology with the unique beauty and qualities of cast iron. We trust that you will appreciate the quality of this handcrafted product.

Your Heritage 8024 woodstove burns very efficiently, and produces a large amount of heat. However, you should not consider your Heritage 8024 the primary heat source for your home. The Heritage 8024's large glass window allows you to enjoy the fire from a variety of locations in the room.

Please read this manual in its entirety. Its purpose is to familiarize you with your stove's safe installation, proper break-in, operation and maintenance. It contains extremely important information so keep it handy and refer to it often.

A qualified heating technician may need this owner's manual as a reference when installing this stove in your home. There are national, state, and local building codes that direct the technician on how to install your stove. These codes stipulate the dimension of stovepipe and clearances to walls, ceilings, hearth, and other combustible surfaces. The codes exist to reduce the risk of fire. Failure to follow these instructions can result in fire, property damage, bodily injury, and even death.

Install the stove in a safe, open area, away from traffic flow, doors, and hallways. If possible, try to install the stove near an existing chimney and chimney connector. It is extremely important to install this stove with the proper clearance from combustible surfaces. You can purchase specific connector pipe and special wall coverings as specified by this manual and the NFPA 211 code to protect combustible surfaces. As a general rule, keep furniture, drapes, curtains, wood, paper, and other combustibles at least 36 inches (92 cm) away from the stove. Never install the stove in or near a storage location for gasoline, kerosene, charcoal lighter fluid or any other flammable liquids.

Install the stove in your central living area to allow heat to radiate naturally to distant rooms. Do not install your stove in a poorly insulated area. This is inefficient and would likely result in higher fuel usage.

- **SAFETY NOTICE:**

  AN IMPROPERLY INSTALLED STOVE CAN RESULT IN A HOUSE FIRE. FOR YOUR SAFETY, CAREFULLY FOLLOW THE INSTALLATION DIRECTIONS. CONTACT LOCAL BUILDING OR FIRE OFFICIALS ABOUT RESTRICTIONS AND INSTALLATION INSPECTION IN YOUR AREA.

The safety of your stove will depend on many factors, some of which include: distance to combustible objects, correct venting, and adequate chimney maintenance. Should you have any questions, do not hesitate to contact your dealer for additional information.

Contact your dealer for any necessary warranty service.

This Heritage 8024 stove is warranted by:

Hearthstone *Quality Home Heating Products, Inc®*
317 Stafford Ave.
Morrisville, Vermont 05661, USA
www.Hearthstonestoves.com

CODES

When you install your Heritage 8024 woodstove, it is imperative that you adhere to all Federal and local codes. Obtain these codes from either of the following sources:

American National Standards Institute, Inc. (ANSI)
1430 Broadway
New York, NY 10018
www.ansi.org

National Fire Protection Association, Inc. (NFPA)
Battery March Park
Quincy, MA 02269
www.nfpa.org

If you are installing your Heritage 8024 in a mobile or manufactured home, follow the guidelines described in the Manufactured Home Construction and Safety Standard, Title 24 CFR, Part 3280 (United States).

SAFETY INFORMATION

Read and understand this Owner's Manual thoroughly before installing and using this stove.

Make sure to install your stove:

- According to the manufacturer's recommendations
- In accordance with all applicable codes
- With the proper sized chimney

When using your stove, follow these safety precautions:

- **Never** modify this stove in any way.
- **Never** burn kiln dried, painted or treated wood in this stove.
- **DO NOT BURN GARBAGE. Never** burn garbage or trash, colored or glossy paper, solvents, plywood, artificial logs, cardboard, or driftwood, in this stove.
- **Never** burn coal in this stove.
- **DO NOT BURN FLAMMABLE FLUIDS.**
- **DO NOT USE CHEMICALS OR FLUIDS TO START THE FIRE. Never** use gasoline, kerosene, charcoal lighter fluid, or other flammable fluids to start or invigorate the fire. These fuels will cause dangerous burning conditions in the stove. Keep all such materials away from the stove.
- **Never** use a wood grate or other device to elevate the fire.
- **Never** allow logs in the firebox to hit the glass when the door is closed.
- **Never** slam the door or use the door to force wood in to the stove.
- **Never** over-fire your stove. (See page 25)
- **Never** put articles of clothing or candles on a hot stove.
- **Never** connect the stove to a flue used by another appliance.

Other safety guidelines:

- Keep all combustible items such as furniture, drapes, clothing, and other items, at least 36" (0.92 m) from the stove (See page 9)
- Install a smoke detector, preferably in an area away from your wood stove.
- Keep a fire extinguisher handy. We recommend the type rated "A B C."
- Dispose of ashes properly (See page 23).
- Keep children and pets away from the stove when it is burning; they could be seriously injured by touching a hot stove.
- Clean your chimney system as needed. (See page 28)
- Outside combustion air may be required if:
  1. This solid-fuel-fired appliance does not draw steadily, smoke rollout occurs, fuel burns poorly, or back-drafts occur whether or not there is combustion present.
  2. Existing fuel-fired equipment in the house, such as fireplaces or other heating appliances, smell, do not operate properly, suffer smoke roll-out when opened, or back-draft whether or not there is combustion present.
  3. Opening a window slightly on a calm (windless) day alleviates any of the above symptoms.
  4. The house is equipped with a well-sealed vapor barrier and tight fitting windows and/or has any powered devices that exhaust house air.
  5. There is excessive condensation on windows in the winter.
  6. A ventilation system is installed in the house.

If these or other indications suggest that infiltration air is inadequate, additional combustion air should be provided from the outdoors. Outside combustion air can be provided to the appliance by using the optional outside air kit #90-53220.

Periodic Checklist

Perform each of these tasks at the specified intervals.

At the End of Every Week:

- Empty ashes from the firebox, sooner if the firebox is full.

At the Beginning of Every Other Month:

- Depending upon your use of the stove, visually inspect the chimney connector and chimney for creosote. (see page 30)
- Check door seals using the "dollar bill test." - When the stove is cool, shut the door on a dollar bill. If the bill pulls out without any resistance, then your stove's door is not sealing properly. To tighten the seal, adjust the door latch mechanism or change the door gasket. (Refer to page 30.)

- Inspect the face of the catalytic combustor for fly ash and soot. Use a soft-bristled brush to remove if present. It is recommended to visually inspect the catalytic combustor at least 3 times during the heating season, or every 2-3 months.

At the End of Every Season:

- Dismantle the chimney connector and clean it thoroughly. Replace any pieces that show signs of rust or deterioration.
- Inspect and, if necessary, clean your chimney.
- Clean out the inside of the stove thoroughly.
- Check and clean the catalytic combustor, if necessary
- Inspect all door gasket material and replace if worn, frayed, cracked or extremely hard.

Emergency Procedures

Establish a routine for the fuel, wood burner and firing technique. Check daily for creosote build-up until experience shows how often you need to clean to be safe. Be aware that the hotter the fire the less creosote is deposited, and weekly cleaning may be necessary in mild weather even though monthly cleaning may be enough in the coldest months. Contact your local municipal or provincial fire authority for information on how to handle a chimney fire. Have a clearly understood plan to handle a chimney fire.

If you have a stovepipe or chimney fire, follow these instructions:

1. If the fire is too threatening, leave the area and call the fire department immediately! If not, perform the next three steps.
2. Close the primary air control.
3. Close the stovepipe damper (if present).
4. Close the bypass damper
5. Keep the stove front door closed!

- **WARNING: DO NOT ATTEMPT TO PUT OUT A STOVEPIPE OR CHIMNEY FIRE BY THROWING WATER ONTO THE STOVE, STOVEPIPE, OR CHIMNEY. THE EXTREMELY HIGH TEMPERATURE OF SUCH FIRES CAN CAUSE INSTANTANEOUS STEAM AND SERIOUS BODILY HARM.**

Once the chimney fire expires, leave the primary air control and bypass handle closed and let the fire in the stove die out completely. Inspect the stove, stovepipe, and chimney thoroughly for any sign of damage before firing the stove again. You must correct any damage before using your stove again.

SPECIFICATIONS

Maximum Heat Output:
29,191 BTUs per hour of Douglas Fir (based on independent laboratory test results).

Floor Size of Heated Area:
Up to a maximum of 2,000 square feet. Factors unique to your home can reduce the square footage the stove will heat. Home insulation value, number and efficiency of windows, floor plan, stove placement, quality of the fuel and other conditions may limit the heating ability of the stove.

Firebox Capacity:
2.2 cubic feet.

Maximum Log Length: Up To 21" (53.3 cm).

Emissions: 1.1 g/hr.

Burn Time: Up to 20+ hrs. (*Heat Life*™: Up to 25+ hours) Note: The amount and weight of wood contained per cubic foot of firebox volume can vary from 10 to 25 lbs. per cubic foot depending on type of wood, moisture content, packing density and other factors.

Stove Dimensions:

Height:	30 1/4" (76.9cm)
Width:	28 1/8" (64.7cm)
Depth:	21 5/8" (55.5cm)
Weight:	580 lbs. (263 kg)

Connector Size:	6" (152 mm) diameter
Metal Chimney:	6" (152 mm) inside diameter
Masonry Chimney:	6" (152 mm) inside diameter (round flue), 8" x 8" (203 x 203 mm) (square flue)

Crate Dimensions: H-39" W-29" L-38" or 99x73.7x 91.5cm (add 4" or 10.2cm for pallet).

Optional Equipment:

Outside Air Kit	90-53220
Blower	90-57210
Rear Heat Shield	90-68210

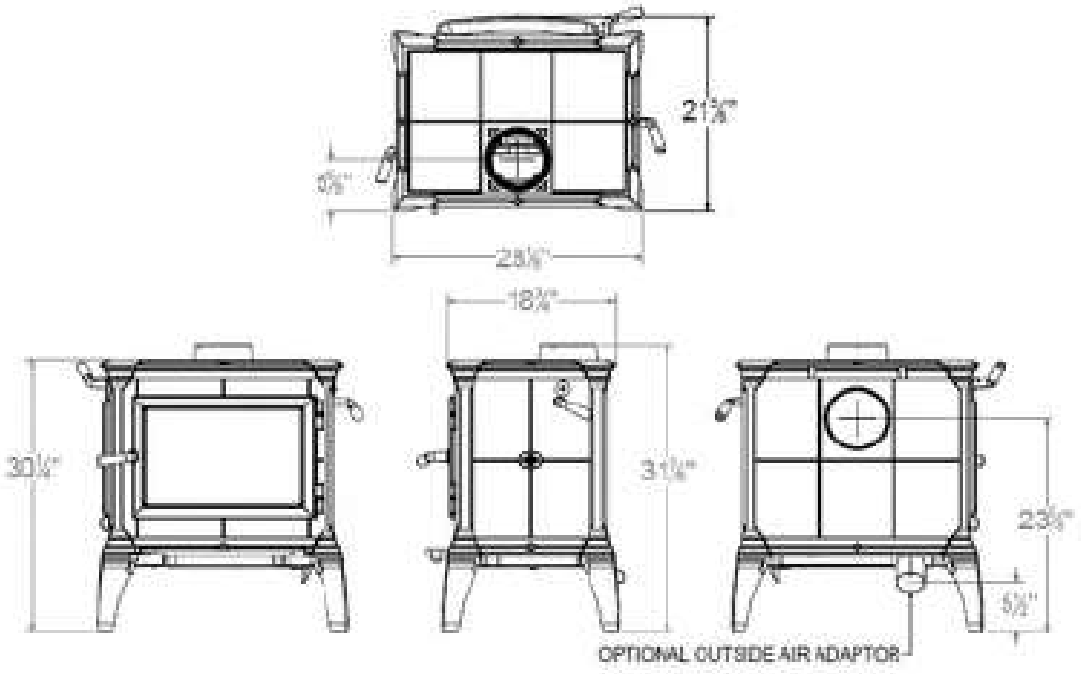

Figure 1 – Heritage 8024 Dimensions

INSTALLATION

UNPACKING

Hearthstone packages your Heritage 8024 woodstove with the greatest care so that it ships safely. Under certain circumstances, however, damage may occur during transit and handling. When you receive the Heritage 8024, carefully unpack and inspect the stove and all accompanying parts. Ensure that all parts are included in the ash pan. If any parts are damaged or missing, please contact your authorized Hearthstone dealer immediately.

The catalysts are secured in the stove with packaging material for shipping. This material does not need to be removed and will burn off during your first fire.

PACK LIST

Heritage 8024 Woodstove
Owner's Manual
Wood Handles, Screws, And
Washers (See Illustration 1 on page 8 for installation)

The door and bypass handles are shipped inside the stove to protect them during shipping and installation. It is best not to install them until after stove is moved into its final location.

The label is attached by a cable to the bottom of the stove. Take care when lifting the stove not to damage the label or cable. After final positioning of the stove, the label may be stored in the holding clip on the bottom shield of the stove.

Installing Your Stove

Choose a place to install your Heritage 8024 woodstove. Consider the location of your stove for optimum heating efficiency. In general, it is better to place your stove in a main living area, rather than in a basement or other confined space.



Inspect this location to make sure that the stove and stovepipes will have the required clearance from combustible materials that are near the stove. Combustibles include walls, floor, ceiling, and chimney chase. You must carefully consider the clearances to all of these combustibles before actually connecting your stove.

If the floor is made of combustible material, then a non-combustible floor protector is required between the floor and the stove. An example of a non-combustible floor protector is a hearth constructed with a continuous layer of tile, brick, slate, glass or another non-combustible facing. There is no R-value requirement.

If you use a rear connector pipe, ensure it is listed with Underwriter's Laboratories. Check the listing of your pipe with UL for the correct clearances.

The diagrams in this manual represent typical installations, but are specific to the Simpson Dura-Vent DVL brand.

The Heritage is to be installed as a freestanding room heater with the clearances in the included installation instructions. The Stove is not to be installed in any factory-built fireplace.

Clearances to NFPA Code 211 Protected Surfaces

You can reduce the clearances to combustible surfaces by using any National Fire Protection Agency (NFPA) approved wall protection system with additional approval of the regulatory authority having jurisdiction in your area.. Please refer to NFPA Code 211 for specifications and complete details. You can obtain this information directly from the NFPA

National Fire Protection Agency
Batterymarch Park
Quincy, MA 02269
1-800-344-3555
1-617-770-3000
www.nfpa.org

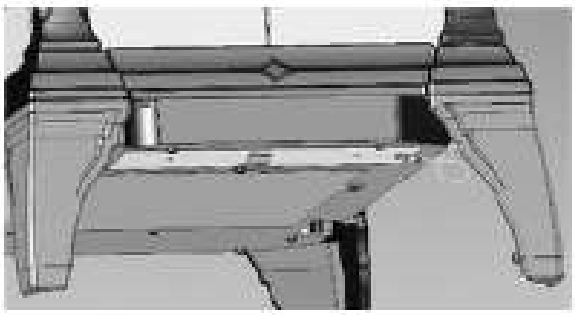

Hearth Requirements & Floor Protection

Ensure you protect combustible flooring with a covering of noncombustible material. The Heritage 8024 does not require an insulated hearth pad. The minimum floor protection must be met under the stove and extend beyond the stove as follows:

SIDE DOOR (LEFT AS SHOWN) 16" (41 cm) US / 18" (46 cm) Canada
OTHER SIDE (RIGHT AS SHOWN) 5" (13 cm)
REAR 2" (5 cm)
FRONT 16" (41 cm) US / 18" (46 cm) Canada

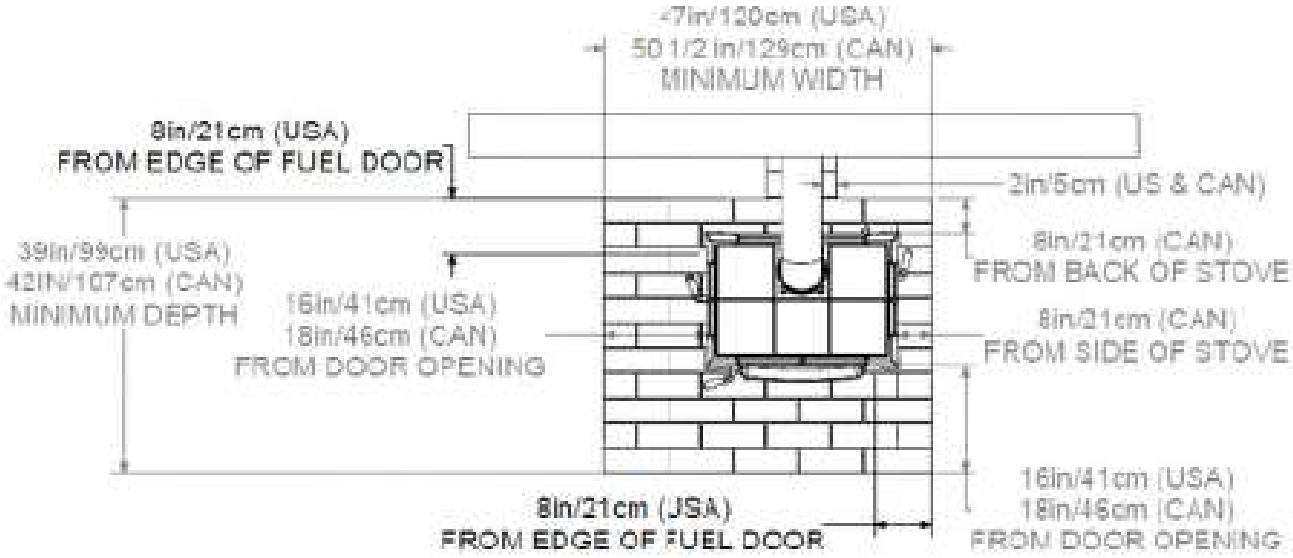

Figure 2 – Hearth Dimensions

Note: Dimensions shown in figure above are measured from the **body** of the stove, not the legs.

Minimum hearth pad dimensions can be reduced by installing the Side Door Lock Kit (Kit 90-70210). **(Minimum hearth pad width with the lock kit is 37in/94cm USA, 40 ½ in/103cm CAN).**

Installing the stove in a room with Luxury Vinyl Plank (LVP) or Luxury Vinyl Tile (LVT) flooring requires extra consideration from the stove to the LVP or LVT flooring. Some LVP and LVT flooring begins to warp at 110° Fahrenheit. Each installation and flooring specification is different. **Consult the flooring manufacturer for maximum temperature recommendations. Additional shielding to prevent warping may be necessary depending on the flooring used.**

COMBUSTIBLE SURFACE REQUIRED CLEARANCES

Note: Dimensions shown in the following figures are from the top casting of the stove unless otherwise indicated.
It is very important to follow minimum clearances for chimney connectors to combustibles such as walls and ceilings when installing the stove near combustible surfaces.

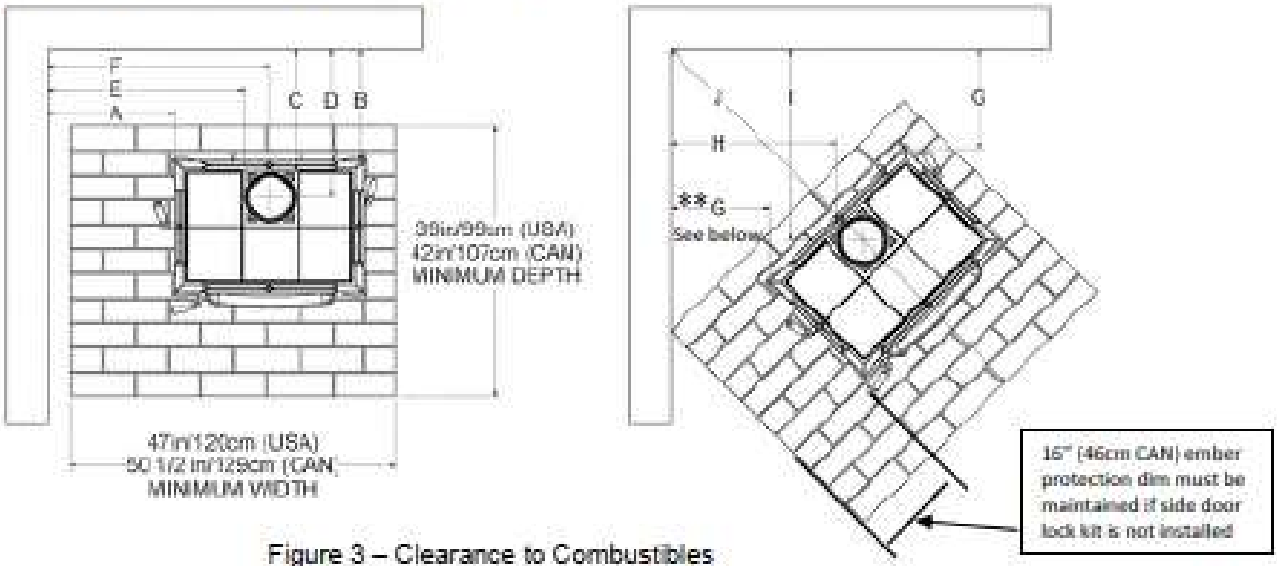

Figure 3 – Clearance to Combustibles

	Parallel						**Corner			
Clearances (inches)	**A**	**B**	**C**	**D**	**E**	**F**	**G**	**H**	**I**	**J***
Single wall stove pipe without heat shield	16" 41cm	16"" 41cm	18"" 46cm	21"" 53cm	26.5" 67cm	29.5" 75cm	8" 21cm	18.25" 46cm	21.25" 54cm	60" 153cm
Single wall stove pipe with heat shield	16" 41cm	10" 26cm	12" 31cm	15" 38cm	26.5" 67cm	29.5" 75cm	8" 21cm	18.25" 46cm	21.25" 54cm	60" 153cm
Double wall stove pipe with heat shield	16" 41cm	6" 15cm	8" 21cm	11" 28cm	26.5" 67cm	29.5" 75cm	8" 21cm	18.25" 46cm	21.25" 54cm	60" 153cm
Minimum dimensions when minimum hearth pad size is considered in an installation where the stove is 45° to the wall.							14.25" 36cm	24" 61cm	27.5" 70cm	67.75" 172cm

*In US. For Canadian installations, add 2"/5cm
**Corner clearances only account for clearance of combustibles to the body of the stove. Minimum hearth pad clearance must be maintained during the install and may result in larger dimensions to the actual combustible surfaces from the body of the stove.
For closer clearances and reduced ember protection, use side door lock kit 90-70210

Alcove Clearances (inches)	Unprotected Surfaces
Minimum alcove width	60 1/2"/154cm
Minimum alcove side clearance	18"/46cm
Minimum alcove rear clearance	20"/51cm
Alcove ceiling above stove top	33 3/4"/86cm
Alcove ceiling above floor	84"/163cm

If you use a rear heat shield to obtain reduced clearances, you must use the optional rear heat shield manufactured by Hearthstone available through your local dealer. Close clearance connector pipe must be tested to UL standards and listed. Check listings of your pipe for actual clearances. Shown are measurements typical only and specific to Simpson Dura Vent DVL brand. Clearances cannot be reduced without the use of the rear heat shield and/or with close clearance connector pipe and/or by protecting the surfaces per NFPA 211 standards.

FOR REAR HEAT SHIELD, USE KIT #90-68210

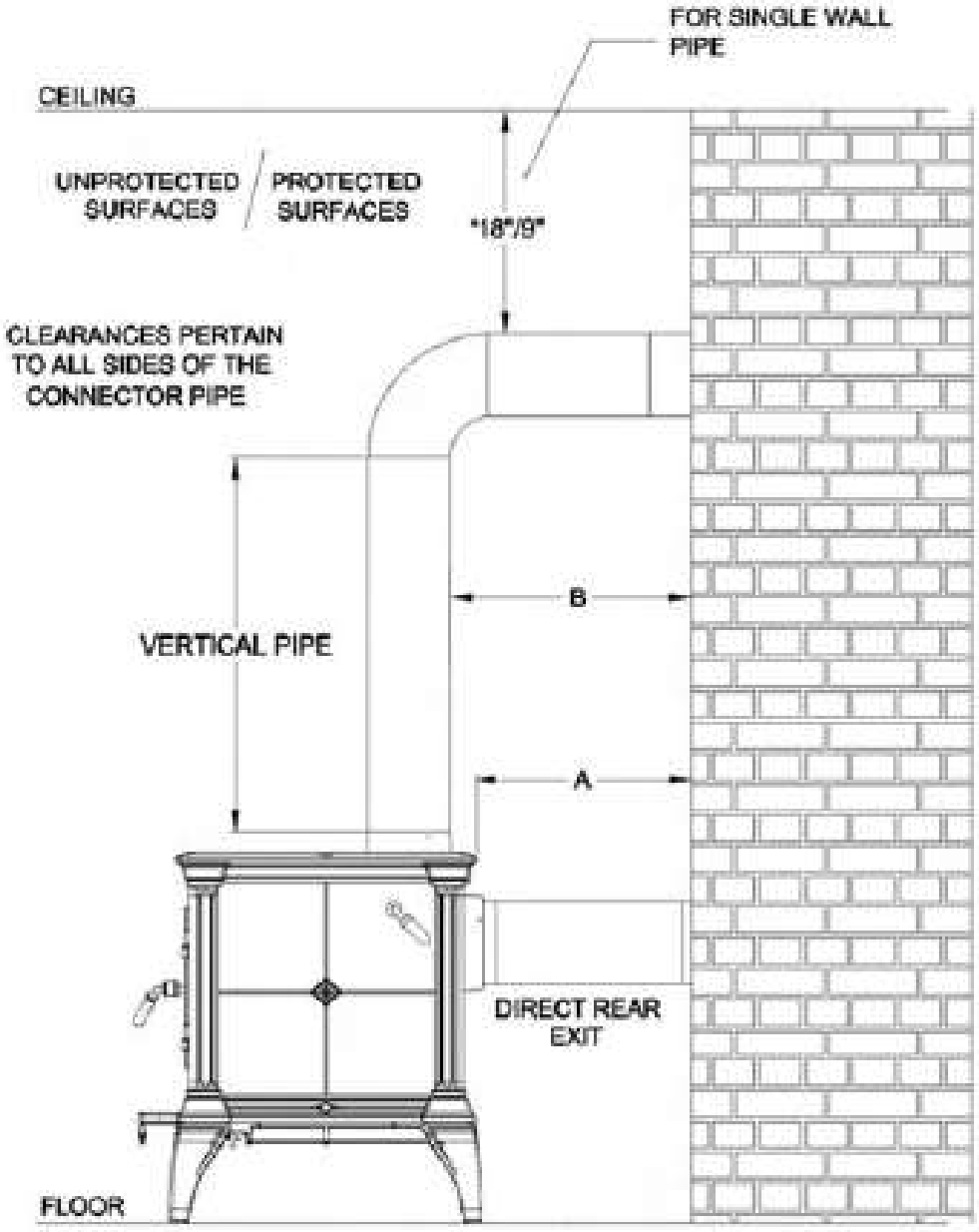

Figure 4 Chimney Connector Clearances

	Single Wall Pipe		Double Wall Pipe	
Through the wall top flue or direct rear exit	With Heat Shield**	Without Heat Shield**	With Heat Shield**	Without Heat Shield**
A	10"/26cm	18"/46cm	6"/15cm	18"/46cm
B	12"/31cm	20"/51cm	8"/21cm	20"/51cm

***For double wall pipe clearance to ceiling, refer to pipe manufacturer specifications.**

**** Rear Heatshield, kit #90-68210**

See Parallel Clearance to Combustibles for clearances to the sides of the stove.

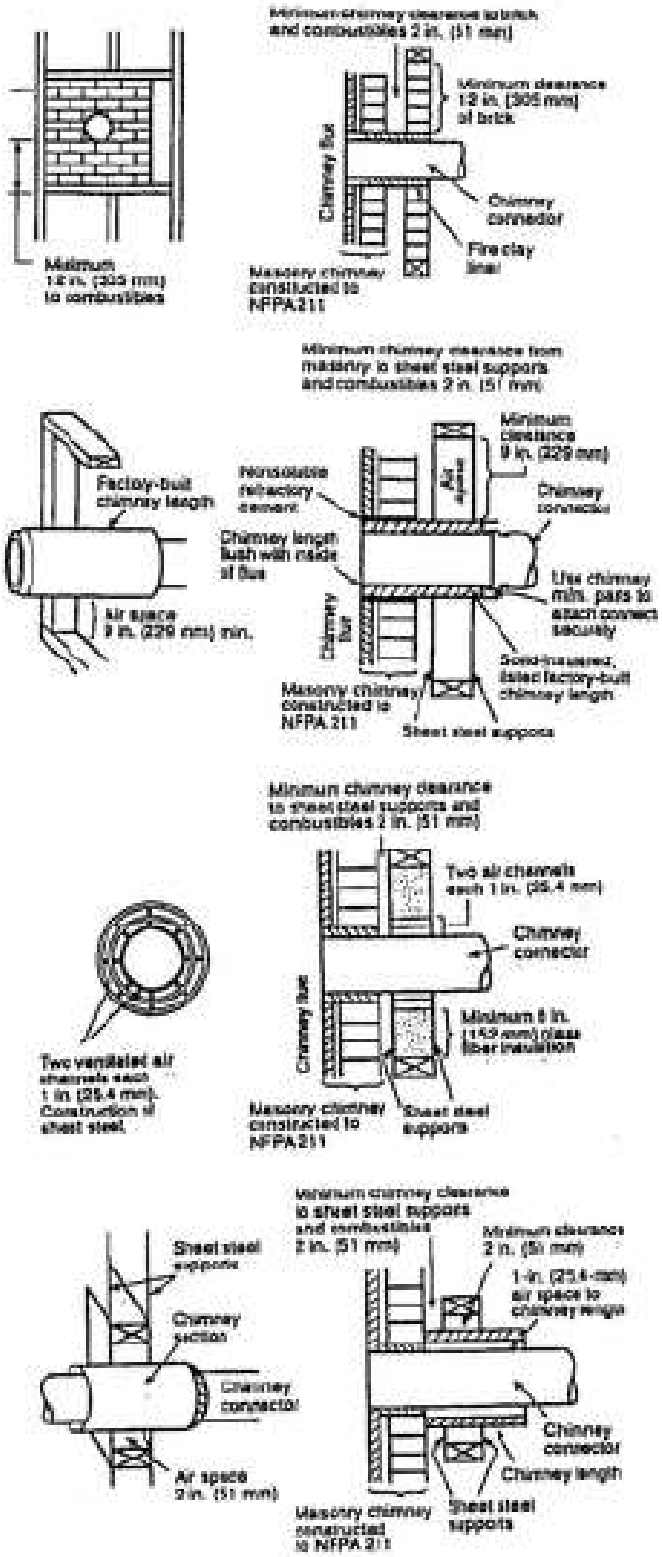

CHIMNEY CONNECTOR SYSTEMS AND CLEARANCES FROM COMBUSTIBLE WALLS FOR RESIDENTIAL HEATING APPLIANCES

A. Minimum 3.5in thick brick masonry all framed into combustible wall with a minimum of 12in. brick separation from clay liner to combustibles. The fire clay liner shall run from outer surface of brick wall to, but not beyond, the inner surface of chimney flue liner and shall be firmly cemented in place.

B. Solid-insulated, listed factory-built chimney length of the same inside diameter as the chimney connector and having 1in. or more of insulation with a minimum 9in. air space between the outer wall of the chimney length and combustibles.

C. Sheet steel chimney connector, minimum 24 gauge in thickness, with a ventilated thimble, minimum 24 gauge in thickness, having two 1in. air channels, separated from combustibles by a minimum of 6in of glass fiber insulation. Opening shall be covered, and thimble supported with a sheet steel support, minimum 24 gauge in thickness.

D. Solid insulated, listed factory-built chimney length with an inside diameter 2in. larger than the chimney connector and having 1in. or more of insulation, serving as a pass-through for a single wall sheet steel chimney connector of minimum 24 gauge thickness, with a minimum 2in. air space between the outer wall of chimney section and combustibles. Minimum length of chimney section shall be 12in. chimney section spaced 1in. away from connector using sheet steel support plates on both ends of chimney section. Opening shall be covered, and chimney section supported on both sides with sheet steel supports securely fastened to wall surfaces of minimum 24-gauge thickness. Fasteners used to secure chimney section shall not penetrate chimney flue liner.

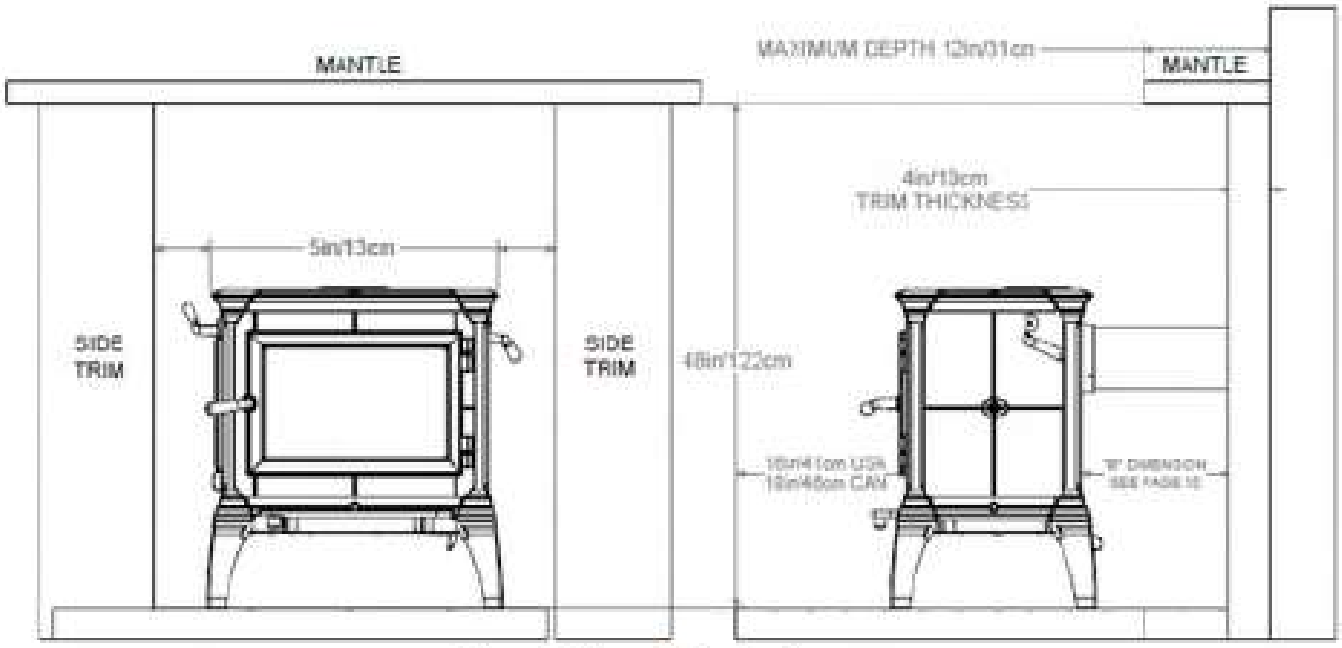

Figure 5 Trim and Mantle Clearances

Outside Air Supply

(Optional Kit #90-53220)

You can connect an outside air source directly to this stove using an optional outside air kit. The advantage of providing outside air directly to the stove is that the air used by the stove for combustion is taken from outside the residence rather than from within the room where the stove is located.

The outside air kit for this stove allows for the direct connection of the stove's air intake to a minimum 3" (76 mm) diameter duct (supplied by others)* which leads to the outside of the house. When considering placement of the duct from the outside of the house to the hearth, keep in mind the need to avoid structural members of the house. The outside air kit attaches to the underside of the stove. Refer to the instructions provided with the kit for installation.

For installations in Canada, where the outside air supply kit is used, the stove must be permanently attached to the floor for stability. See page 17 for lock down instructions.

*An adaptor for 4" duct is available if needed. KIT #90-53308

The International Residential Code (IRC) does not allow the outside air duct to terminate higher than the appliance. Some building officials restrict vertical rise in the duct's termination. Hearthstone recommends the termination be at the same level, or lower than the air intake on the stove.

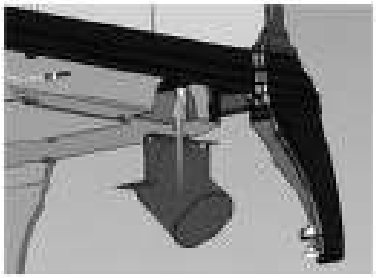

Figure 6 – Outside Air Kit Detail

Locate the termination of the duct on the outside wall of the home in such a manner to avoid the possibility of obstruction by snow, leaves or other material. Screen the termination using ¼" x ¼" mesh rodent screen and cover it with a rain/wind proof hood (flex pipe, outside termination, mesh, and hood supplied by others) Contact your dealer for availability.

When selecting ducting and other components, note that for installations in Canada, any air intake which is connected directly to the outdoors must include a damper allowing 100% closure.

Top to Rear Venting Conversion

When installing your stove, you have the option to vent out the rear of the stove. To convert your stove from venting out the top to vent out the rear, follow the steps below:

1. Using a 7/16" wrench, remove the four bolts that hold the top flue collar to the top cast. Be careful not to drop the bolt and washers into the stove. Remove the flue collar and place off to the side.



2. Using a 7/16" wrench, reach through the top opening where the flue collar was removed from and remove the top two bolts and washers holding the rear flue plate in and place off to the side.

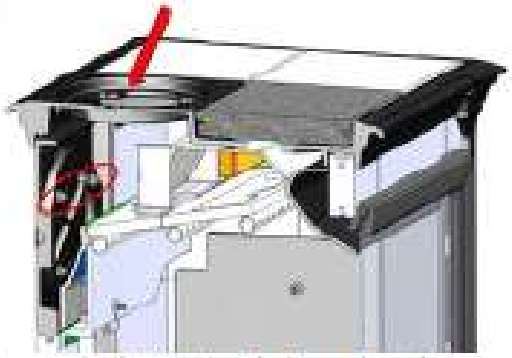

3. Loosen the bottom two bolts and washers out of rear flue plate until the plate is free. Remove rear flue plate and place to side. Leave bottom two bolts in place.



4. Hold bottom two bolts in place and position flue collar into rear exit position. Hand tighten bottom two bolts slightly, do not fully tighten yet.



5. Insert top two bolts with washers into top two threaded holes of flue plate. Fully tighten all four bolts.
6. Place the flue plate on top opening. Align screw holes, install bolts and washers and tighten down with 7/16" wrench.

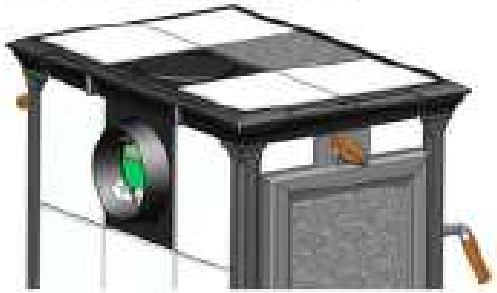

Venting Components & Configuration Requirements

- **DO NOT CONNECT THIS UNIT TO A CHIMNEY FLUE USED BY ANOTHER APPLIANCE**
- Single wall connector that is at least 24 MSG or 25 MSG blued steel stovepipe.
- Double wall connector (Rear pipe) which is used with a listed, factory-built "Type HT" chimney or with a masonry chimney to reduce clearances, is available from several manufacturers, your dealer can help you choose. Some air insulated connector pipe models available are Simpson Dura Vent DVL and Metalbestos DS. Security, GSW and Ameritec also have acceptable Rear connector pipe.
- When used in a mobile home, a spark arrester is required. (See page 18)
- The chimney connector cannot pass through a floor or ceiling, nor any attic or roof space, closet or similar concealed space. Where venting requires passage through a wall or partition of combustible construction, the installation must conform to NFPA Code 211 or CAN/CSA - B365.

- It is very important to follow minimum clearances for chimney connectors to combustibles such as walls and ceilings when installing the stove. Typical chimney connector clearances are outlined below. The single wall clearances are generic; the double wall clearances shown are specifically for Simpson DuraVent DVL and may vary with other brands. ***Check the specifications from the manufacturer of your connector.***

COMPONENTS OF A VENTING SYSTEM

The complete venting system consists of several components: chimney connector, wall thimble, wall pass-through, chimney, and liner. It is *absolutely necessary* that you install all of these components and maintain the clearances to combustibles discussed earlier to ensure a safe stove installation. Failure to follow these instructions and specified components or using make-shift compromises can result in fire, property damage, bodily injury, and even death. Be sure to follow the manufacturer's instructions to maintain an effective vapor barrier at the location where the chimney of other component penetrates the exterior of the structure.

To protect against the possibility of a house fire, you *must properly install and constantly maintain the venting system in good condition*. Be sure to inspect the chimney connector and keep it clean. Upon inspection, immediately replace rusted, cracked, or broken components.

- The *chimney connector* is the stovepipe from the woodstove to the chimney. The chimney connector stovepipe is 6" (152 mm) diameter, 24 MSG or 25 MSG blued steel connector pipe. *Do not use aluminum or galvanized steel pipe* - they cannot withstand the extreme temperatures of a wood fire.
- The *thimble* is a manufactured (or site-constructed) device installed in combustible walls through which the chimney connector passes to the chimney. It keeps the walls from igniting. You must use a wall thimble when installing a chimney connector through a combustible wall to the chimney.

- A *wall pass-through* (or chimney support package) also keeps the walls from igniting. You must use one when connecting through a wall or ceiling to a prefabricated chimney.

- Only install this stove to a *lined masonry chimney* or an *approved high temperature prefabricated residential* type building heating appliance chimney. *Do not* connect this stove to a chimney serving another appliance; you will compromise the safe operation of both the wood stove and the connected appliance.

- A *liner* is the UL 1777 or ULC S635 (for factory built fireplace or masonry) chimney.

You must connect your stove to a chimney comparable to those recommended in this manual. *Do not use stovepipe as a chimney.* Use stovepipe for freestanding installations only to connect the stove to a proper chimney.

- **WARNING: DO NOT CONNECT THIS APPLIANCE TO ANY AIR DISTRIBUTION DUCT OR SYSTEM.**

INSTALLING A VENTING SYSTEM

Attach stovepipe sections to the flue collar and to each other with the crimped end toward the stove. If creosote builds up, this allows the creosote to run into the stove and not on the outside of the stovepipe or onto the stove.

Secure all joints, including attaching the stovepipe to the stove's flue collar, with three sheet metal screws. Install #10 x 1/2" (3 mm x 13 mm) sheet metal screws into the holes pre-drilled in the flue collar. Disregarding the screws can cause joints to separate from the vibrations that result from a creosote chimney fire.

You can simplify connecting stovepipe by using additional accessories such as telescoping pipes, slip-connectors or clean-out tees. These accessories ease the periodic inspection of your chimney, as well as allow you to dismantle the stovepipe easily (without moving the stove).

Install the stove as close as practical to the chimney, while maintaining all proper clearances. Install stovepipe that is as short and as straight as possible. Horizontal runs of stovepipe must always rise away from the stove at a minimum of 1/4" per foot (21mm/m).

We do not recommend long runs of stovepipe to increase heat dispersal. Longer lengths of stovepipe, or more connecting elbows, than necessary increase the chances of draft resistance and the accumulation of creosote buildup.

In general, you do not need to install a stovepipe damper with the Heritage 8024. Some installations, however, could benefit from a stovepipe damper, such as a tall chimney which can create a higher than normal draft. In such cases, a damper can help regulate the draft. The Heritage 8024 requires a draft between 0.06" and 0.1" WC. For drafts above 0.1"

WC, install a stovepipe damper. Check the draft at stove installation time.

Remember, the NFPA recommends minimum clearances for chimney connectors to combustibles such as walls and ceilings. Once the stove is installed at safe distances from these combustible surfaces, it is also important to maintain these connector clearances for the remainder of the installation.

CONNECTING THE STOVE TO A CHIMNEY

You can install your Heritage 8024 to a prefabricated metal chimney, or to a masonry chimney.

This room heater must be connected to (1) a listed Type HT (2100° F) chimney per UL 103 or ULC S629, or (2) a code-approved masonry chimney with a flue liner. The chimney size should not be less than the flue collar, or more than three times greater than the cross-sectional area of the flue collar.

We recommend installing a cleanout tee where possible to simplify chimney cleaning and maintenance.

Connecting to a Prefabricated Metal Chimney

There are two ways to install a prefabricated metal chimney:

- An *interior* installation where the chimney passes inside the residence through the ceiling and roof.
- An *exterior* installation where the chimney passes through the wall behind the stove then up the outside of the residence.

Whenever possible, choose an interior chimney. An interior chimney heats up quickly and retains its heat; thus promotes a better draft and discourages the formation of creosote. An exterior chimney does not benefit from the warmth of the building, so it typically operates at lower flue temperatures than an interior chimney and may experience increased creosote accumulation.

When connecting the Heritage 8024 to a prefabricated metal chimney, you must follow, precisely, the manufacturer's installation instructions. Use only Type HT (2100° F), prefabricated metal chimneys listed per UL 103 or ULC S629 standards.

Ensure the size of the prefabricated chimney's flue is appropriate for the Heritage 8024. The Heritage 8024 requires a 6" (152 mm) inside diameter flue for new installations. A 6" diameter flue provides adequate draft and performance. You can use an 8" (203 mm) diameter existing flue with a reducer. An oversized flue contributes to creosote accumulation. (In this case, bigger is NOT better.)

When purchasing a prefabricated chimney to install with your stove, Ensure you also purchase from the same manufacturer the wall pass-through (or ceiling support package), "T" section package, fire-stops (when needed), insulation shield, roof flashing, chimney cap, and any other required accessories. Follow the manufacturer's instructions when installing the chimney and accessories. In addition, ensure you maintain all manufacturers' recommendations for the proper clearances to the chimney.

Connection to a Masonry Chimney

Consider two primary elements when connecting your stove to a masonry chimney: the chimney itself and the thimble where the stovepipe connects to the chimney. **Use only code approved masonry chimneys containing a proper flue liner.**

Before connecting to a masonry chimney, hire a professional to examine the chimney for cracks, loose mortar, and other signs of deterioration and blockage. If the chimney needs repair, complete them before installing and using your stove. Do not install your stove until the chimney is safe for use.

Ensure the chimney's cleanout is complete and working properly. To avoid a loss of draft, the cleanout door must close completely and provide a tight seal. If the cleanout door leaks, the chimney will cool, your stove will perform poorly, and creosote can form.

Ensure the size of the chimney's flue is appropriate for this stove and that it is not too large. Use a masonry chimney with a maximum 6" Diameter or 8" x 8" (203 mm x 203 mm) tile size for best results. An oversized flue contributes to the accumulation of creosote.

Use the following checklist to ensure that your masonry chimney meets these minimum requirements:

MASONRY CHIMNEY WALL CONSTRUCTION:

- Mortared brick or modular block at least 4" (102 mm) thick – must use liner
- A mortared rubble or stone wall – must use liner

FLUE LINER OPTIONS:

- Tile - minimum wall thickness of 5/8" (16 mm), installed with refractory mortar, and with at least 1" (25 mm) air space around the liner
- Stainless steel - UL listed 6" diameter, insulated or wrapped liner, or the space around the liner filled with vermiculite or suitable material (these keep the liner warmer for better performance)

- Ensure any equivalent flue liner is a listed chimney liner system meeting type HT requirements or other approved material.

INTERIOR CHIMNEY REQUIREMENTS:

- Must have at least 2" (51 mm) clearance to combustible materials
- Must install fire stops at the spaces where the chimney passes through floors and/or ceiling
- Any insulation material must be at least 2" (51 mm) from the chimney

EXTERIOR CHIMNEY REQUIREMENTS:

- At least 1" (25 mm) clearance to combustible materials

CHIMNEY HEIGHT REQUIREMENTS (SEE *FIGURE 9*):

- At least 3 feet (0.9 m) higher than the highest part of the roof opening through which it passes.
- At least 2 feet (0.6 m) higher than any part of the roof within 10 feet (3 m) measured horizontally from the top of the chimney.

The recommended minimum chimney height for top of stove installation is 16 feet (4.9 m) off the floor or 13 feet 5 3/4 inches (4.1 m) from the top of the stove. For rear exit connection, the recommended minimum chimney height is 19 feet (5.8m) off the floor or 16 feet 5 3/4 inches (5.0m) from the top of the stove. The recommended maximum chimney height is 30 feet (9m). The Heritage 8024 requires a draft between 0.06" and 0.1" water column. Ensure your chimney is long enough to provide the minimum draft, and use a damper if your installation has a required chimney height that provides too much draft.

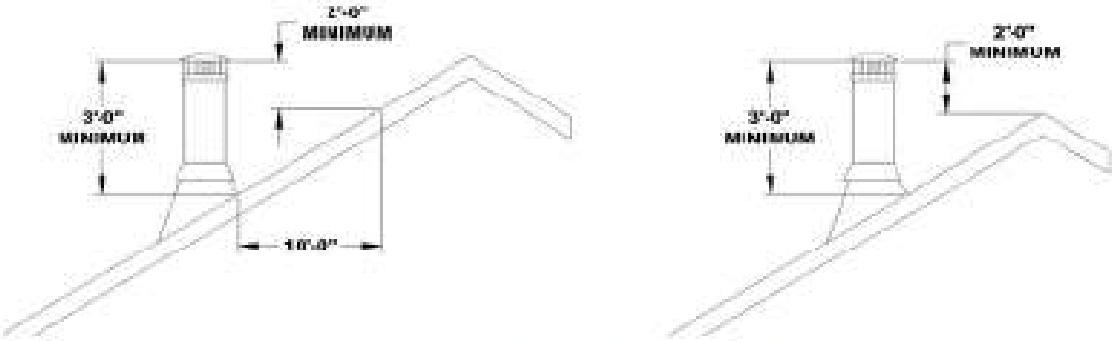

Figure 8 – Chimney Height Requirements

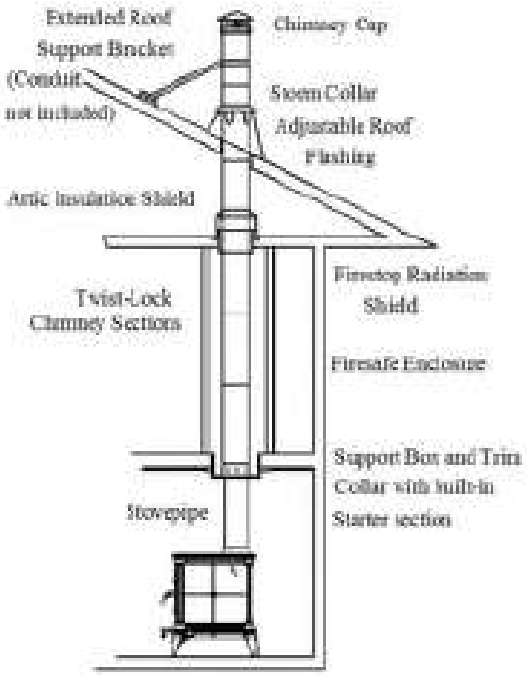

Two story house installation with attic.

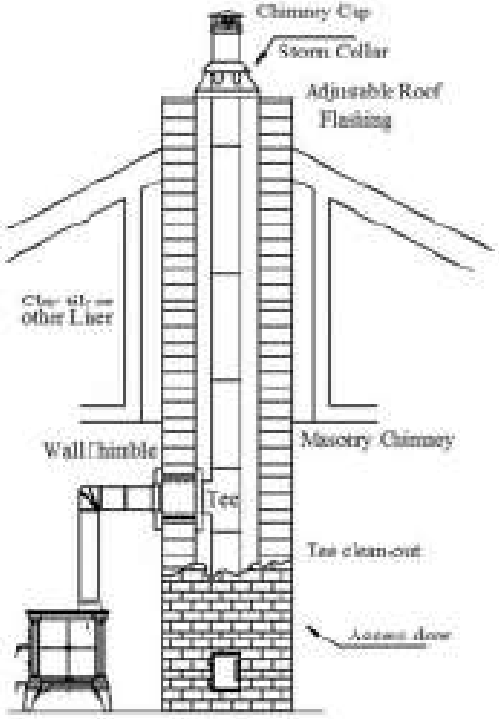

Chimney pipe through Clay tile
or other Lined Masonry Chimney

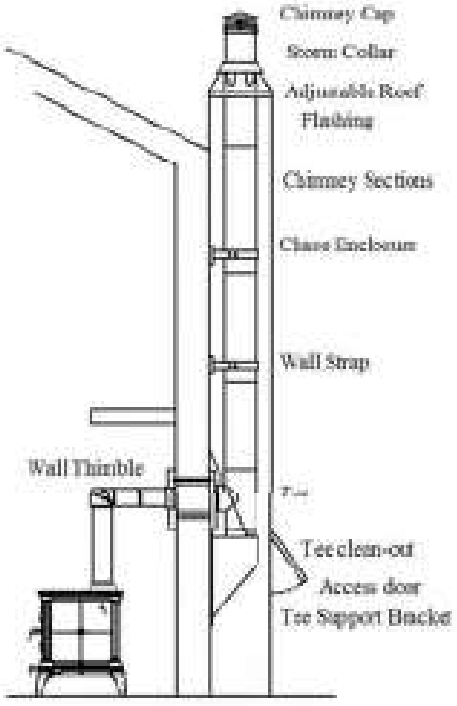

Chimney through outer wall with enclosed chase.
Chimney is supported by Tee Support Bracket.

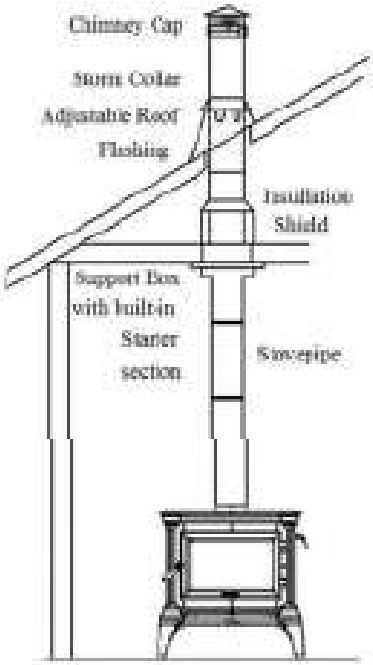

One story house installation with attic.
Chimney is supported by Ceiling

Figure 9 – Typical Chimney Configuration

INSTALLING IN A MOBILE HOME

Follow these special requirements for installing your stove in a mobile home.

- Install the stove in accordance with 24 CFR, Part 3280 (HUD)
- An outside air kit must be used in all mobile home installations. See page 12 for details.
- Permanently attach the stove to your mobile home's floor. Use the shipping clips that came with the stove and fasteners long enough to attach securely to the subfloor. (The clips and fastener heads may be painted to minimize visibility).

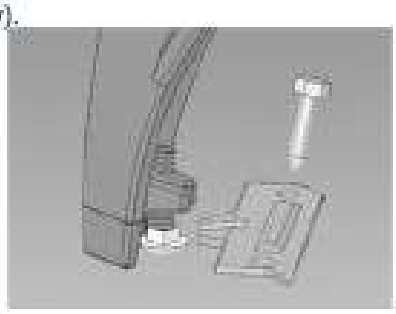

Figure 10 - Lock Down Detail

- Install a Mobile Home Chimney & Connector Kit conforming to US/UL103 or CAN/ULC-S629, Standard for Factory-Built Chimneys. The system must be removable for transportation and meet all applicable local and federal guidelines for termination height.

  Each kit must include:

  Stainless spark arrester cap, storm collar, Adjustable vented flashing – 0/12 – 6/12, Two 24" chimney pipes, 24" support box with built-in starter section and trim.
- Failure to follow these instructions and specified components or using make-shift compromises can result in fire, property damage, bodily injury, and even death.
- **WARNING: DO NOT INSTALL IN A SLEEPING ROOM IN A MOBILE HOME.**
- **CAUTION: MAINTAIN THE STRUCTURAL INTEGRITY OF THE MOBILE HOME WALLS, FLOOR, CEILING, AND ROOF WHEN INSTALLING AND USING YOUR STOVE.**
- **Burning any fuel other than wood in this unit could generate dangerous levels of carbon monoxide within the living space.**
- **THE FRONT DOOR MUST REMAIN CLOSED WHEN IN OPERATION EXCEPT FOR START UP AND LOADING. Leaving the door open during use could cause any smoke or fire detectors in the home to be set off or a fire could escape the firebox and start the room on fire.**
- **If this unit is installed in a mobile home, care must be taken to ensure adequate air is available. If not enough air is available it could starve the room of all the oxygen. (See page 27 for more details)**
- **CAUTION: REMOVE THE CHIMNEY WHEN TRANSPORTING THE MOBILE HOME!**
- Be sure to follow the manufacturer's instructions to maintain an effective vapor barrier at the location where the chimney of other component penetrates the exterior of the structure.
- Chimney must be attached directly to stove.
- Chimney must extend at least 3 feet (0.9 m) above the part of the roof through which it passes.
- Top of chimney must be at least 2 feet (0.6 m) above the highest required elevation of any part of the mobile home within 10 feet (3 m) of the chimney.
- All roof-chimney terminations must be readily removable and reinstallable at or below an elevation of 13-1/2 feet (4.1 m) above ground level, without the use of special tools or instructions.
- When the chimney exits the mobile home at a location other than through the roof, and exits at a point 7 feet (2.1 m) or less above the ground, a guard or other enclosure must be installed at the point of exit up to a height of 7 feet.
- For installations as described above, a chimney guard or enclosure must not permit a 3/4" (19.1 mm) diameter rod to pass through it, and must not allow a 1/2 inch (12.7 mm) rod to make contact with the chimney when passed through the guard a distance of 4 inches (102 mm).

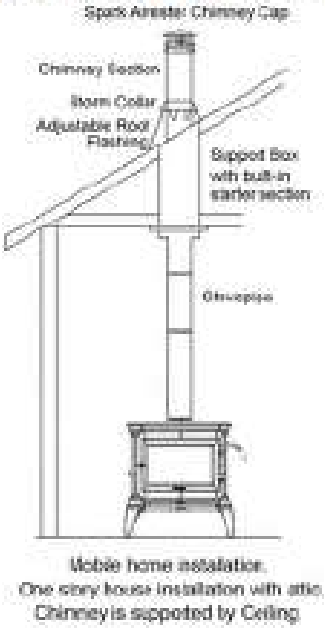

Mobile home installation.
One story house installation with attic

Figure 11 – Mobile Home Installation

OPERATION

Once your Heritage 8024 is installed, you are ready to light a fire.

Every installation, season's firewood, and operator's technique varies. Learn how to use your stove most efficiently for your installation. We can give you the basic principles, but only you can ensure maximizing the potential of your stove while also operating it safely.

- **WARNING: HOT WHILE IN OPERATION! KEEP CHILDREN, PETS, CLOTHING AND FURNITURE AWAY. CONTACT MAY CAUSE SKIN BURNS.**

Read this entire chapter before lighting your first fire. It explains the controls and features of your wood stove, how to choose firewood, and how to use your stove on a daily basis.

CONTROLS AND FEATURES

Before lighting any fires, become familiar with the location and operation of your stove's controls and features and learn how to use them (*See Figure 12*). For your own safety, do not modify these features in any way. We recommend you use fireplace gloves when the stove is in operation and hot.

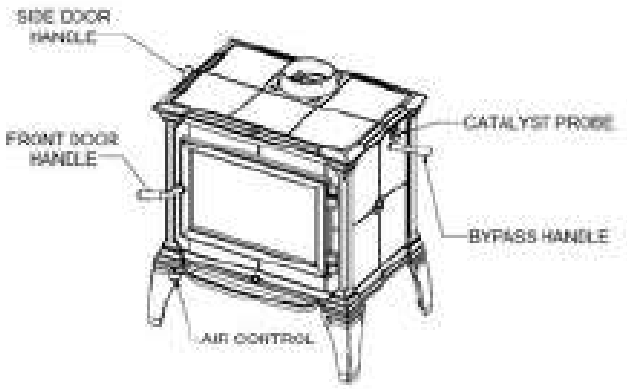

Figure 12 - Controls & Features

FRONT DOOR HANDLE: The firebox door allows you to load wood into your stove; a wood handle operates the door. To open the door, pull up on the handle and swing the door away from the stove. To latch the door, push the door tightly towards the firebox then continue to push the handle in and down until it latches shut. Gently pull on the door handle to make sure it is properly latched.

PRIMARY AIR CONTROL: The handle is located on the front lower left of the stove, just under the ash lip. The primary air control allows you to regulate the amount of air entering the firebox. Generally, the more air allowed into the firebox, the faster and hotter the rate of burn; conversely, less air creates a slower burn. To fully open the primary air intake, move the handle as far as it will go to the left; move the handle as far as it will go to the right, to close the primary air control.

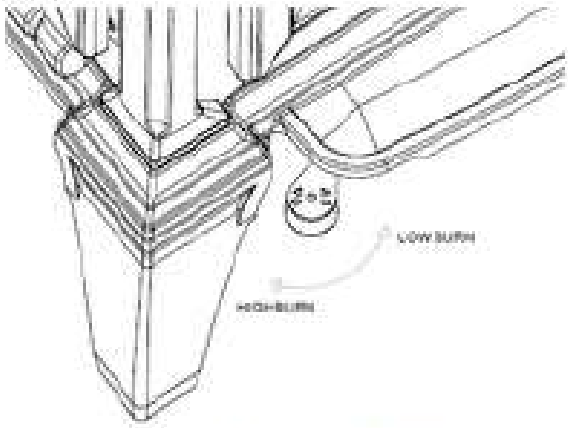

Figure 13 – Air Control

OPTIONAL ASH PAN: Part Number 90-54240

See the installation instructions included with the ash pan kit if installation is necessary. The ash pan collects burned ash from a fire and allows you to conveniently remove the ash from your wood stove. The ash pan and ash pan access door is located under the ash lip. To operate the ash grate, open the ash pan door, and simply pull the handle out to open the ash grate and push the handle in to close the ash grate. When the ash door is closed, it will automatically close the ash grate. (Refer to figure below to see the attachment of the ash grate control handle to the control slide.) The firebox should be cleared of ashes periodically by sliding the ash grate towards the front door, sifting the ashes across the grate into the ash pan, then returning the grate to its closed position.

The ash pan is easy to remove and has a handle for convenient disposal of ashes. Before removing the ash pan, push it (hard!) into the stove, which kicks the ashes further into the pan. To close the ash door, push the door closed and turn the handle from vertical down to its previous position. Note: The ash grate can only be opened when the ash door is ajar or open.

Do not operate the stove unless the ASH PAN is inserted into the stove and the ash door is closed. This could overheat and damage the stove.

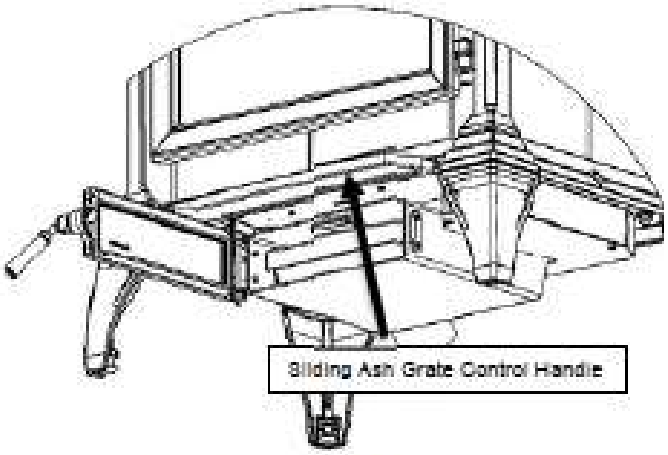

Figure 14 – Ash Grate Operation

Customizing Your Stove's Doors

Both the Front and optional Ashpan Doors can be reversed for loading and cleaning convenience (from hinged at the left to hinged at the right, for example).

Detailed instructions for reversing the Front Door are found with the installation instructions included with the optional Front Door Reversal Kit (90-73229). The kit includes a striker plate for latching the door on either the right or left side.

Detailed instructions for reversing the Ashpan Door are found with the installation instructions included with the optional Ashpan Kit (90-54240).

BYPASS HANDLE: The bypass handle controls the bypass door inside the stove. When the handle is pointed towards the front of the stove, the bypass door is open, and when the handle is pointed towards the rear of the stove, the bypass door is closed. The bypass door directs the flow of combustion products through or around the catalytic combustor. When the bypass handle is open, combustion products are directed around the catalytic combustor. The bypass handle should be open when first staring a fire until the catalytic combustor heats up to activation temperature, and whenever opening the front door to load the stove. When the bypass handle is closed, combustion products are directed through the catalytic combustor. The bypass handle should be closed once the catalytic combustor heats up to activation temperature, and remain closed whenever the stove is burning and in the active temperature range.

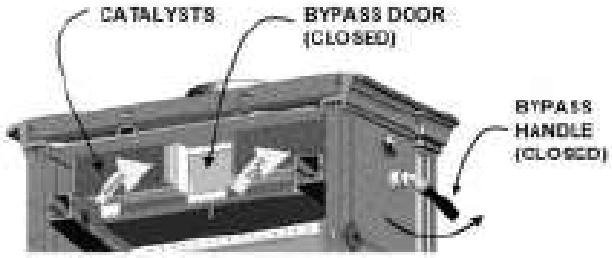

Figure 15 – Bypass Closed

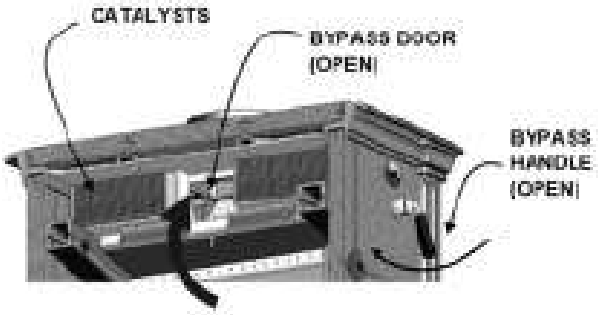

Figure 16 – Bypass Open

CATALYST PROBE: The catalyst probe monitors the downstream temperature of the catalyst, and indicates when the stove is in the active range for the catalyst. When the stove is in the "active" range, the bypass handle should be closed. When the stove is in the "Inactive" range, the bypass handle should be opened until the stove heats up. If the probe is in the "Too Hot" range, keep the door closed, fully close the air control, and allow the stove to cool down until the probe falls into the "Active" Range. Once the catalyst probe has reached the active range, heat generated from burning smoke keeps the catalyst warm and active as long as fuel remains in the stove. The Heritage 8024 typically operates in the 800 °F to 1300 °F range.



Figure 17 – Catalyst Probe

CHOOSING FIREWOOD

Burn only natural firewood (known as cordwood) in the Heritage 8024 Wood Heater. This stove is not designed to burn other fuels.

- **CAUTION: DO NOT USE CHEMICALS OR FLAMMABLE FLUIDS TO START THE FIRE. DO NOT USE CHARCOAL, PELLETS, COAL, ARTIFICIAL LOGS OR ANY OTHER MATERIALS AS FUEL; THEY ARE NOT SAFE. DO NOT BURN GARBAGE OR FLAMMABLE FLUIDS.**
- **THE USE OF UNAUTHORIZED FUEL SUCH AS COAL COULD PRODUCE HIGH LEVELS OF CARBON DIOXIDE IN THE LIVING SPACE. AT HIGH LEVELS CARBON DIOXIDE COULD RESULT IN PERSONAL INJURY OR DEATH.**

The quality of your firewood directly affects heat output, duration of burn and performance of your stove. Softwoods generally burn hotter and faster, while hardwoods burn longer and produce better coals. Density and moisture content are two critical factors to consider when purchasing wood for your stove.

The following is a list of some wood species and their relative BTU (British Thermal Unit) content. The higher the BTU content, the longer the burn. Firewood with higher BTUs is generally ideal for a wood stove.

Wood Heat Value: Sorted By Btu Content

Common Name	Lb/ cord	MBTU/ cord
High		
Osage Orange (Hedge)	4,728	32.9
Hickory, Shagbark	4,327	27.7
Hop Hornbeam (Ironwood)	4,267	27.3
Beech, Blue (Ironwood)	3,690	26.8
Birch, Black	3,690	26.8
Locust, Black	3,690	26.8
Hickory, Bitternut	3,832	26.7
Locust, Honey	3,832	26.7
Apple	4,100	26.5
Mulberry	3,712	25.8
Oak, White	4,012	25.7
Medium High		
Beech, European	3,757	24
Maple, Sugar	3,757	24
Oak, Red	3,757	24
Ash, White	3,669	23.6
Birch, Yellow	3,669	23.6
Medium		
Juniper, Rocky Mtn	3,150	21.8
Elm, Red	3,112	21.6
Coffee tree, Kentucky	3,112	21.6
Hackberry	3,247	20.8
Tamarack	3,247	20.8
Birch, Gray	3,179	20.3
Birch, White (Paper)	3,179	20.3
Walnut, Black	3,192	20.2
Cherry	3,120	20
Ash, Green	2,880	19.9
Cherry, Black	2,880	19.9
Elm, American	3,052	19.5
Elm, White	3,052	19.5
Sycamore	2,808	19.5
Ash, Black	2,992	19.1
Maple, Red	2,924	18.7
Fir, Douglas	2,900	18.1
Medium Low		
Boxelder	2,797	17.9
Alder, Red	2,710	17.2
Pine, Jack	2,669	17.1
Pine, Norway (Red Pine)	2,669	17.1
Pine, Pitch	2,669	17.1
Catalpa	2,360	16.4
Hemlock	2,482	15.9
Spruce, Black	2,482	15.9
Pine, Ponderosa	2,380	15.2
Low		
Aspen, American	2,290	14.7
Butternut (Walnut, White)	2,100	14.5
Spruce	2,100	14.5
Willow	2,100	14.5
Fir, Balsam	2,236	14.3
Pine, White (Eastern, Western)	2,236	14.3
Fir, Concolor (White)	2,104	14.1
Basswood (Linden)	2,108	13.8
Buckeye, Ohio	1,984	13.8
Cottonwood	2,108	13.5
Cedar, White	1,913	12.2

Moisture content also plays a key role in the performance of your stove. Wood freshly cut from a living tree (green wood) contains a great deal of moisture. As you might expect, green wood burns poorly. You must season green wood before using it

in your wood stove. To season green wood properly, split, stack, and allow it to air dry for a period of one year. Green wood may provide less than 2000 Btu per pound, whereas dry wood can provide up to 7000 Btu per pound.

Stack the firewood on skids or blocks to keep it off the ground, cover only the top of the stack. Plastic or tarps that cover the sides of the woodpile trap moisture and prevent the wood from drying. As for stacking, an old Vermonter said, "The spaces between the logs should be large enough for a mouse to get through, but not for the cat that's chasing it."

- **CAUTION: DO NOT STORE FIREWOOD WITHIN THE STOVE'S SPECIFIED CLEARANCES TO COMBUSTIBLE MATERIALS.**

BUILDING A FIRE

Once you understand the controls of your wood stove and have the appropriate firewood, you are ready to start a fire.

- **WARNING: NEVER USE GASOLINE, GASOLINE-TYPE LANTERN FUEL, KEROSENE, CHARCOAL LIGHTER FLUID, OR SIMILAR LIQUIDS TO START OR 'FRESHEN UP' A FIRE IN THIS HEATER. KEEP ALL SUCH LIQUIDS WELL AWAY FROM THE HEATER WHILE IT IS IN USE.**

BREAKING IN YOUR WOOD STOVE

It is imperative that your stove is "broken in" gradually. Soapstone must be "seasoned"; over-firing a new stove may cause soapstone to crack or may damage other stove parts. Natural moisture in the freshly quarried soapstone must be driven out slowly to minimize the "shock" to the stone of its first exposure to high firebox temperatures. In addition, the asbestos-free furnace cement must be cured slowly to ensure adequate sealing and bonding.

When you light your first fires, the woodstove will emit some smoke and fumes. This is normal "off-gassing" of the paints and oils used when manufacturing the woodstove. If you find it necessary, open a few windows to vent your room. The smoke and fumes will usually subside after 10 to 20 minutes of operation. The odor and smoke will end once the stove is "cured".

The first few fires of the season may produce other odors from impurities that exist in the area immediately surrounding the stove. Some potential impurities are cleaning solvents, paint solvents, cigarette smoke, and soot from scented candles, pet hair, dust, adhesives, a new carpet, and new textiles. These odors will dissipate over time. You can alleviate these odors by opening a few windows or otherwise creating additional ventilation around your stove. If any odor persists, contact your dealer or an authorized service technician.

If you adhere to the operating procedures in this manual, the steel, cast iron, and soapstone components of your stove will give you many years of trouble-free use. With use, the color of the soapstone may change and small fractures may appear on the surface. These changes do not affect the function of the stove. If a panel breaks completely, it must be replaced

Avoid the following conditions that can cause the glass, soapstone, steel or cast iron pieces to break:

- Do not throw wood into the stove.
- Do not use the door as a lever to force wood into the stove.
- Do not load wood encrusted with ice into a burning stove - the thermal shock can cause damage.
- Do not use a manufactured log grate or otherwise support the fuel. Burn the fire directly on the floor of the firebox.

BUILDING A BREAK IN FIRE

1) Open the bypass handle. Open the front door and place five or six double sheets of tightly twisted newspaper in the center of the firebox. Arrange kindling in a crisscross pattern over the newspaper. Kindling should be approximately ten pieces, 1/2" (13 mm) in diameter and 10" to 16" (254 mm to 457 mm) long.
2) Fully open the primary air control by pulling the control handle fully to the left stop.
3) Light the paper under the kindling. Leave the door slightly ajar momentarily until the kindling has started to burn and draft begins to pull.
4) Close the door and allow the fire to burn. Keep the door closed while the stove is in use.
5) KEEP A WATCHFUL EYE ON YOUR STOVE to maintain a steady, low-heat fire. Your first fire should make the stove warm but **not hot to the touch**. Visible steam, or boiling moisture and hissing indicate the soapstone is too hot. At most, a few small chunks of wood should be added to the fire to reach safe break-in temperatures.
6) Once the stove is warm but **not hot to the touch**, close the primary air control by pushing it fully inward toward the stove to allow the fire to die out completely.
7) Let the stove return to room temperature.

Your first fire and first fire each season thereafter should be built and maintained as outlined above. Your patience will be rewarded by a properly seasoned stove.

- NOTE: The cool flue gas temperatures present during the break-in procedure may cause rapid creosote build-up. The door glass may also get dirty. A good hot fire will clean it. We recommend a visual inspection (and cleaning if necessary) of your stovepipe and chimney once the break-in procedure is completed.

Normal Operation

Building A Fire For Everyday Use

1) Open the bypass handle. Open the front door and place five or six double sheets of tightly twisted newspaper in the center of the firebox. Arrange kindling in a tee-pee configuration over the newspaper. Use approximately 10 pieces of kindling, 1/2" (13 mm) in diameter and 10" to 16" (254 mm to 406 mm) long.
2) Fully open the primary air control by sliding it fully to the left.
3) Light the paper under the kindling. Leave the front door slightly ajar momentarily until the kindling begins to burn and draft begins to pull.
4) Close the door and allow the fire to burn.
5) Once the kindling is burning, open the front door and add logs, small at first, to build the fire up. Ensure you keep the logs away from the glass in front in order for the air-wash system to work properly. Keep the front door closed while the stove is in use.

CAUTION: DO NOT BUILD THE FIRE TOO CLOSE TO THE GLASS. KEEPING THE FIRE TOWARDS THE CENTER OF THE FIRE BOX WILL KEEP COALS FROM BUILDING UP AGAINST THE GLASS DURING RELOADING.

6) Once the fire is burning well, and the catalyst probe indicates that the stove is in the active range, close the bypass handle. Now the combustion products are passing through the catalytic combustor, and your stove will be burning at its optimal efficiency.
7) After closing the bypass door, allow the stove to run on a high setting for around 20 minutes to ensure the catalytic combustor stays in the active range. This will also allow the fire to burn off any residue on the door glass from any previous low-burn fires.
8) Use the primary air control to regulate the desired rate of burn. Pull the handle towards you for a higher burn rate, and push the handle towards the stove for a lower burn rate. The air control does not close completely.

Note: Always remember to open the bypass handle before opening the front door. When opening the front door to reload or re-arrange logs, it is advisable to open the door just a crack, pause for a moment then open the door completely. This procedure allows the firebox to clear of smoke before the door is open fully. In addition, reloading on a bed of hot, red coals reduces smoking time and brings fresh fuel up to a high temperature rapidly. During the refueling and rekindling of a cool fire, or a fire that has burned down to the charcoal phase, operate the stove at a medium to high firing rate for about 10 minutes to ensure that the catalyst reaches approximately 600 °F. Once catalyst reaches operating temperature, the bypass handle can be closed. When reloading the stove, try to keep an open path behind the Lower Primary Air Opening (LPAO). It is helpful to leave a small valley in the coal bed behind the LPAO to insure faster re-lighting.

Catalytic Combustor Operation

The Heritage 8024 uses a catalytic combustor to ensure highly clean and efficient burns. The catalytic combustor is made from a stainless steel corrugation that is coated with a catalytic material. The catalytic combustor becomes active around 500 °F (260°C), helping to burn up smoke and any remaining particles that were not fully burned in the firebox. During the startup of a cold stove, a medium to high firing rate must be maintained for about 20 minutes. This ensures that the stove, catalyst, and fuel are all stabilized and at proper operating temperatures. Even though it is possible to have gas temperatures reach 500 °F (260°C) within 2 to 3 minutes after a fire is started, if the fire is allowed to die down immediately, it may go out or the combustor may stop working. Once the stove and catalytic combustor heat up, heat generated from burning smoke keeps the catalyst warm and active as long as fuel remains in the stove. You stove will burn the cleanest and most efficiently when the catalyst is in the active range. There should be little to no visible smoke from your chimney when the catalyst is in the active zone and fully functional.

Burn Rate

This wood heater has a manufacturer-set minimum low burn rate that must not be altered. It is against federal regulations to alter this setting or otherwise operate this wood heater in

a manner inconsistent with operating instructions in this manual.

LOW BURN: Move the air control lever all the way to the right. (*see figure 17*). This closes the air shutter to its minimum opening. A low burn rate over extended periods is not advisable as it can promote the accumulation of creosote. Inspect the venting system frequently if using low burn rates consistently.

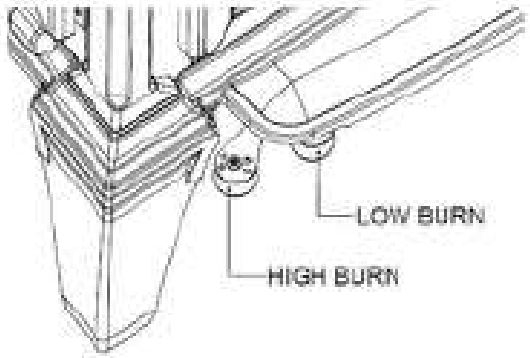

Figure 18 – Air Control Settings

MEDIUM BURN: Any setting from low to high will deliver varying rates of burn depending on the chimney setup, fuel and other local conditions. It is best to experiment to find the most comfortable setting for your situation.

HIGH BURN: Completely open the primary air control by moving it all the way to the left. Fully load the firebox with wood on a bed of hot coals or on an actively flaming fire. To minimize creosote accumulation, run the stove on high once or twice daily for 35 to 45 minutes to fully heat the stovepipe and chimney.

OPEN DOOR BURNING: The Heritage 8024 is not intended to be burned with the door open. Burn your Heritage 8024 with the door closed only. Door may be left ajar for short periods as necessary for lighting.

CAUTION: Do not burn fuel other than cord wood in your stove.

OVER-FIRE CAUTION

Over-firing means the stove is operating at temperatures above normal temperatures reached during High Burns outlined in the *BURN RATE* section. Carefully avoid over-firing, as it will damage the stove. Symptoms of chronic over-firing can include warped components, short burn times, a roaring sound in the stove or stovepipe, and discoloration of the stovepipe. A properly installed stove using fuel and following operating procedures as outlined in this manual should not over-fire.

Excessive draft, inappropriate fuel, and operator error can cause over-firing. Correct an over-fire situation as follows:

- **EXCESSIVE DRAFT:** Contact your local dealer to have a draft reading taken. Any draft in excess of 0.1 WC requires a damper in the stovepipe. Some installations may require more than one damper.
- **INAPPROPRIATE FUEL:** Do not burn coal; kiln dried lumber, wax logs, compressed wood, highly volatile fuel and combustible material or anything other than natural cordwood.

OPERATOR ERROR: Ensure all the gaskets are in good condition. Replace worn out or compressed gaskets. Only burn the stove with the firing and ash doors in the closed position.

If you suspect your stove is over-firing, discontinue use and contact your dealer immediately. **Damage caused by over-firing is not covered by your warranty.** Results of over-firing can include warped or burned out internal parts, cracked refractory panels, discolored or warped external parts, and damaged finish.

- **ANY SIGNS OF OVER-FIRING WILL VOID YOUR WARRANTY!**
- **THE FRONT DOOR MUST REMAIN CLOSED WHEN IN OPERATION**

REMOVAL AND DISPOSAL OF ASHES

You can leave a thin layer of ashes in the firebox if preferred. Allow fire to die down or go out completely. It is important to prevent ashes from building up around the front door opening or they will spill out, or they can pack into the gasket channel and prevent proper sealing. To remove ashes, use a fireplace shovel. Avoid removing large live coals by pushing them to the side and removing only the finer ash with a shovel.

Disposal of ashes - Ashes should be placed directly into a **metal** container with a tight fitting lid. Do not place any other items or trash into the metal container. Do not pour water into the container. Replace the container's lid and allow the ashes to cool. Never place the ash disposal container on a combustible surface or vinyl flooring, as the container could be **hot!**

Pending disposal, place the closed ash container on a noncombustible floor or on the ground outside, well away from all combustible materials, liquid fuels, or vehicles. Retain ashes in the closed container until all coals thoroughly cool.

If the ashes are disposed of by burial in soil or otherwise locally dispersed, they should be retained in the closed container until all cinders have thoroughly cooled.

NEVER place ashes in wooden or plastic containers, in trashcans with other trash, or in paper or plastic bags, no matter how long the fire has been out. Coals within a bed of ashes can remain hot for several days once removed from the firebox.

MAINTENANCE

CATALYTIC COMBUSTOR INSPECTION AND REPLACEMENT PROCEDURES

- **WARNING: THIS WOOD HEATER CONTAINS CATALYTIC COMBUSTORS, WHICH NEED PERIODIC INSPECTION AND REPLACEMENT FOR PROPER OPERATION. IT IS AGAINST FEDERAL REGULATIONS TO OPERATE THIS WOOD HEATER IN A MANNER INCONSISTENT WITH OPERATING INSTRUCTIONS IN THIS MANUAL, OR IF THE CATALYTIC ELEMENTS ARE DEACTIVATED OR REMOVED. DO NOT OPERATE YOUR STOVE WITH THE CATALYTIC ELEMENTS REMOVED.**

It is important to periodically monitor the operation of the catalytic combustors to ensure that they are functioning properly and to determine when they need to be replaced. A non-functioning combustor will result in a loss of heating efficiency, and an increase in creosote and emissions. Following is a list of items that should be checked on a periodic basis

-Combustors should be visually inspected at least three times during the heating season to determine if physical degradation has occurred. Actual removal of the combustors is not recommended unless more detailed inspection is warranted because of decreased performance. If any of these conditions exists, refer to Catalyst Troubleshooting section of this owner's manual.

-This catalytic (or hybrid) heater is equipped with a temperature probe to monitor catalyst operation. Properly functioning combustors typically maintain temperatures in excess of 500 °F, and often reach temperatures in excess of 1,000 °F. If catalyst temperatures are not in excess of 500 °F, refer to Catalyst Troubleshooting section of this owner's manual.

-You can get an indication of whether the catalysts are working by comparing the amount of smoke leaving the chimney when the smoke is going through the combustor and catalyst light-off has been achieved, to the amount of smoke leaving the chimney when the smoke is not routed through the combustors (bypass mode).

1. Light stove in accordance with instructions in section 3.3.5.
2. With smoke routed through the catalyst, go outside and observe the emissions leaving the chimney.
3. Engage the bypass mechanism and again observe the emissions leaving the chimney. Significantly more smoke will be seen when the exhaust is not routed through the combustor (bypass mode)

INSPECTING THE CATALYST AND REMOVING/REPLACING THE BAFFLE

1. Allow the stove and ashes to fully cool.
2. Remove the metal baffle retainer by removing the cotter pin (A) through the front air tube, and lifting the retainer upwards (B) away from the baffle.
3. Gently pull the front baffle towards the front of the stove (C), over the front tube, and out of the stove.

CAUTION - Do not force the baffle out of the stove. Gently adjust the baffle orientation until it can be removed freely from the stove.

4. The middle air tube may be removed for easier access to the catalysts, but it is not required
5. To remove the middle tube, remove the cotter pin on the right-hand side of the middle air tube, and push the tube to the right until the left end is free. Tip the left side of the tube downwards and pull the tube out of the stove
6. Use a small vacuum nozzle or soft bristled brush to remove any accumulated ash or soot on the face of the catalyst.
7. Inspect the catalyst for any unusual warping, corrosion, or plugged openings
8. If any unusual conditions are found, remove the catalyst blocks – See Removing or Replacing the Catalysts.
9. Once the catalysts are inspected and cleaned, replace the middle air tube, baffle, and baffle retainer. Installation is the reverse of removal.

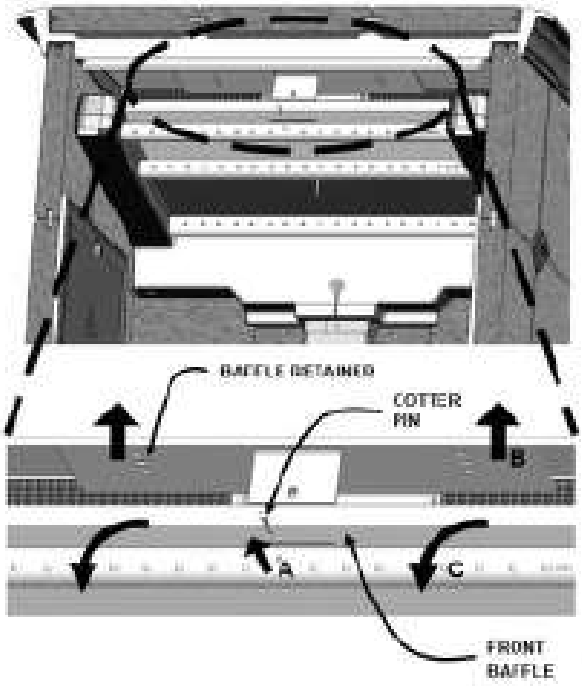

Figure 19 – Removing the Front Baffle

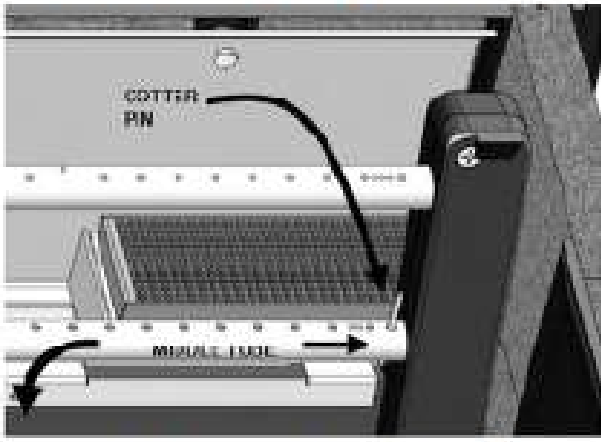

Figure 20 – Removing the Middle Air Tube

REMOVING OR REPLACING THE CATALYST

Refer to the Catalytic combustor warranty on page 35 for additional catalyst replacement information.

1. Allow the stove and ashes to fully cool.
2. Follow the procedures from "INSPECTING THE CATALYSTS AND REMOVING/REPLACING THE FRONT BAFFLE" to gain access to the catalysts.
3. Inspect the catalysts for visible damage or fly ash. If fly ash exists, gently brush the catalyst off with a narrow soft-bristle brush, or vacuum with a crevice tool.
4. If excessive fly ash exists, or if there are suspected catalyst performance issues, fully remove the catalysts by lifting catalyst retaining bar out of channels (save for reinstallation) and set aside. Grip catalyst and pull toward the front of the stove. Note how retaining bar is installed before removing.
5. Use a flashlight to look in the catalyst pocket and vacuum any ash that may be in pocket or just outside it.
6. Inspect the catalysts for any fly ash or clogging, and remove with a soft bristled brush or vacuum crevice tool. If extra cleaning is needed, follow the guidelines below:
   - -You may use compressed air under 35 psi, air only, no chemicals.
   - -You may soak the catalysts in a hot water mix (not boiling), 4 parts water, 1 part vinegar. Rinse with cold water until vinegar smell is mostly gone.
   - -No metal tools such as gun cleaners should be used.
   - -No detergents or chemicals.

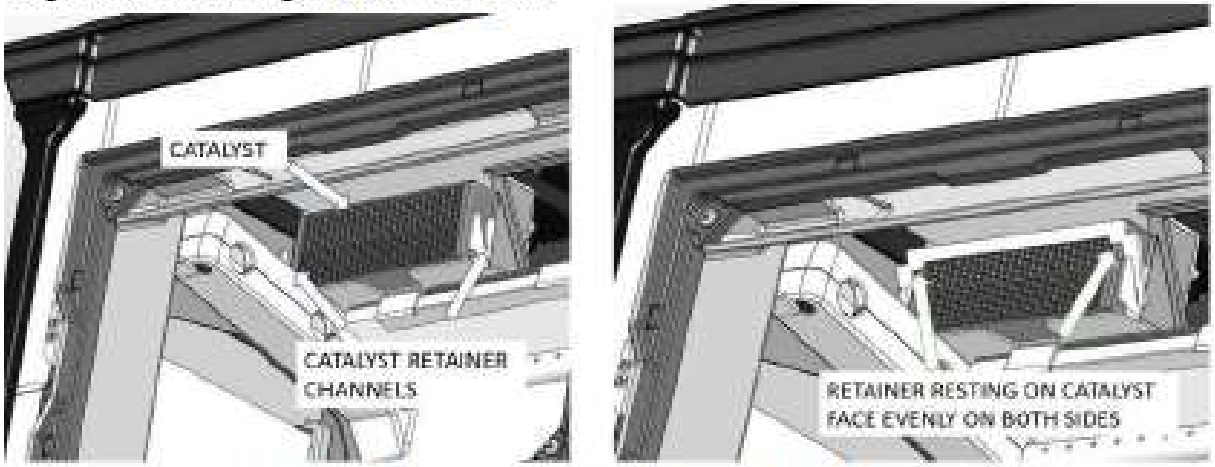

Figure 21 – Catalyst Retainer Removal / Installation
(FRONT TUBE HIDDEN FOR VIEW)

7. After cleaning inspect catalyst further for any damage that may have been missed.

8. Only remove the catalysts if required. In general, the less you handle the catalysts, the better. If any unusual conditions are found, remove the catalyst blocks – See replacing the catalysts.
9. Some warping or bowing of the catalysts over time is acceptable, as long as the catalyst gasket continues to seal. Measure the catalyst in the middle section – if the dimensions are outside the range shown in Figure 21 above, replace the catalyst.
10. Replace catalyst by setting it into pocket pushing it against back wall of pocket and center with equal space left and right. Position retaining bar into grooves at sides of box. Retaining bar should sit even and contact catalyst ends left and right. When the retainer is installed correctly the catalyst will be firmly in place. Retaining bar should look parallel to edges of catalyst.

3. Remove the cotter pin securing the rear baffle support to the catalyst housing (A). See Figure 22.
4. Support the rear baffle while pulling the rear baffle support outwards towards the front of the stove (B)
5. Remove the rear baffle.
6. Installation is the reverse of removal.
7. Allow the stove and ashes to fully cool.
8. Follow the procedures from "INSPECTING THE CATALYSTS AND REMOVING/REPLACING THE FRONT BAFFLE" to remove the front baffle.
9. Remove the cotter pin securing the rear baffle support to the catalyst housing (A)
10. Support the rear baffle while pulling the rear baffle support outwards towards the front of the stove (B)
11. Remove the rear baffle.
12. Installation is the reverse of removal.
13. Allow the stove and ashes to fully cool.
14. Follow the procedures from "INSPECTING THE CATALYSTS AND REMOVING/REPLACING THE FRONT BAFFLE" to remove the front baffle.
15. Remove the cotter pin securing the rear baffle support to the catalyst housing (A)
16. Support the rear baffle while pulling the rear baffle support outwards towards the front of the stove (B)
17. Remove the rear baffle.
18. Installation is the reverse of removal.

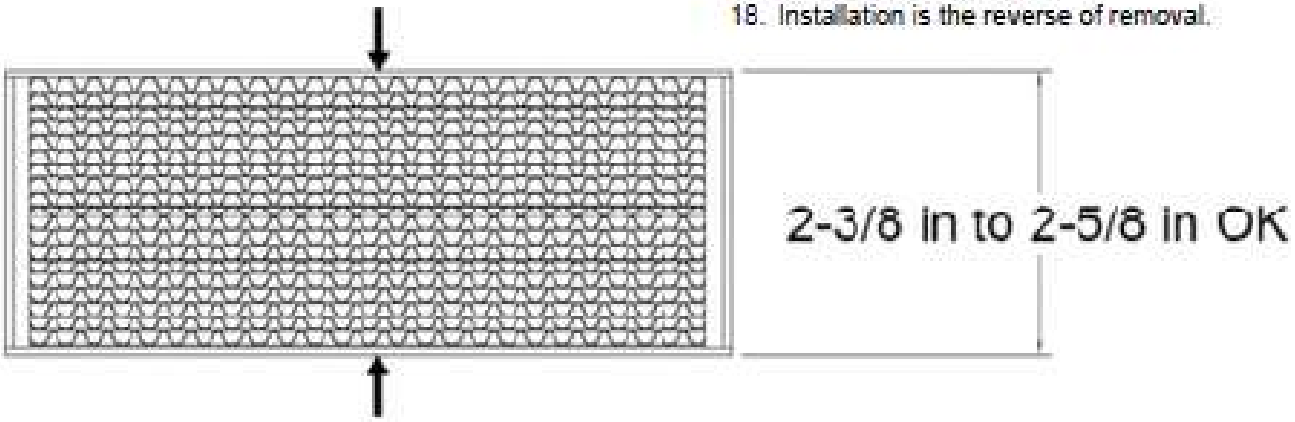

Figure 22 - Acceptable Catalyst Distortion

REMOVING/REPLACING THE REAR BAFFLE

1. Allow the stove and ashes to fully cool.
2. Follow the procedures from "INSPECTING THE CATALYSTS AND REMOVING/REPLACING THE FRONT BAFFLE" to remove the front baffle.

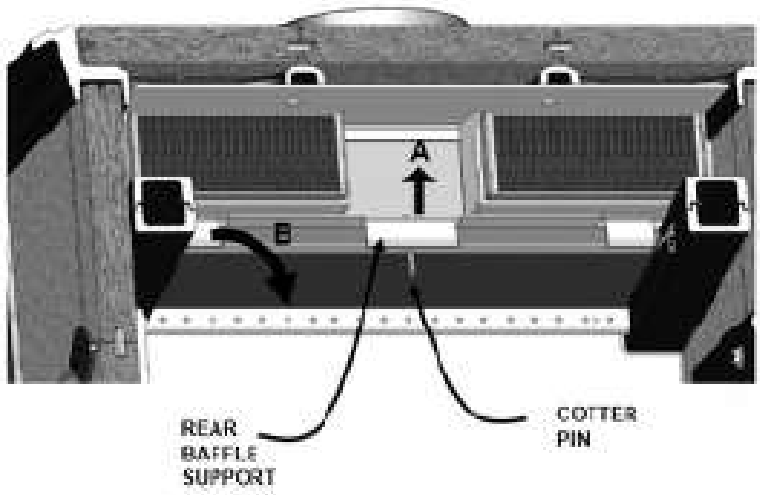

Figure 23 - Removing the Rear Baffle

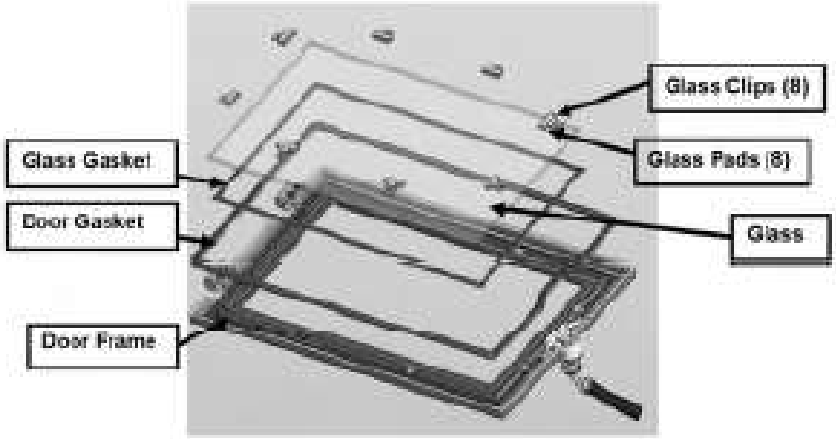

Figure 24 – Glass and Gasket Replacement

GLASS REPLACEMENT PROCEDURES

- **WARNING: DO NOT OPERATE THIS APPLIANCE WITH THE GLASS PANEL REMOVED, CRACKED, OR BROKEN. DO NOT SUBJECT THE DOOR TO ABUSE, SUCH AS STRIKING OR SLAMMING SHUT. ONLY A QUALIFIED SERVICE PERSON SHOULD REPLACE THE GLASS PANEL.**

1. Follow the instructions included with the replacement glass kit.
2. Remove the door.
3. Remove the screws from the glass retainer (use penetrating oil if necessary) – lift the retainer off the glass. Set aside for reinstallation.
4. Carefully lift the damaged glass out of the door and discard.
5. Remove any remaining glass and old gasket material.
6. Clean the screw holes and place a small amount of anti-seize compound in each one.
7. Place the new glass onto the door. **Ensure sticker indicating the coated side is on the exterior face of the glass.**
8. **Important! Center the glass** and ensure that the edges of the glass are parallel with the edges of the opening.
9. Check glass position again (centered, and parallel), then screw the glass retainer clips with the glass pads back on the door using a crisscross pattern. Tighten the screws no more than 1/8th of a turn after they seat. The glass will break at this point if not positioned correctly.

10. Apply a light film of anti-seize lubricant on the door's hinge pins if needed.
11. Install the door.
12. After 5 or 6 fires, check the glass retainer screws, and retighten if necessary.

Required Glass Kit: Part Number: 90-58215. Use only 5mm x 287mm x 457mm Ceramic IR, or Neoceram IR glass. Contact your Hearthstone dealer.

CREOSOTE FORMATION & REMOVAL

When wood burns slowly at low temperatures, it may produce tar and other organic vapors, which combine with expelled moisture to form creosote. These creosote vapors condense in the relatively cool chimney flue of a slow-burning fire. As a result, creosote residue accumulates on the flue lining. When ignited, this creosote makes an extremely hot fire, which may damage the chimney or even destroy the house. When burning wood, inspect the chimney connector and chimney at least once every two months during the heating season to determine if there is a creosote buildup.
If a creosote build-up occurs, inspect the stovepipe connector and chimney more often, at least monthly during the heating season to monitor the accumulation. If a creosote residue greater that 1/4" (6 mm) accumulates, remove it to reduce the risk of a chimney fire.

PREVENTION

Burn the stove with the primary air control fully open for 35 - 45 minutes daily to burn out creosote deposits from within the stove and the venting system.

After reloading with wood, burn the stove with the primary air control fully open for 15 to 20 minutes. This manner of operation ensures early engagement of the secondary combustion system that minimizes creosote buildup in the chimney.

If your glass always remains dirty, your operating temperatures are too low or your wood is wet; therefore, there is a higher risk of creosote buildup.

Inspect the venting system at the stove connection and at the chimney top. Cooler surfaces tend to build creosote deposits faster, so it is important to check the chimney at the top (where it is coolest) as well as from the bottom near the stove.

CLEANING

Remove accumulated creosote with a cleaning brush specifically designed for the type of chimney in use. We recommend you use a certified chimney sweep to perform this service. Contact your dealer for the name of a certified chimney sweep in your area (your dealer may be a certified sweep!).

We recommend that before each heating season you have the entire system professionally inspected, cleaned and repaired, if necessary.

GASKETS

Replace door gasket material every two to three seasons, or whenever it becomes deteriorated or loose, depending on stove use. If the door seal leaks, a new gasket will ensure a tight seal and improve stove performance.

We recommend you only use Hearthstone replacement gaskets when you need to replace your door gasket. Contact your dealer for a gasket kit that includes instructions, and the gasket for your stove.

GLASS

The glass used in our stoves is actually not plain glass, but a tough, clear ceramic material capable of operating at temperatures up to 2300° F. Do not operate the stove with a broken door glass. Do not abuse the front door by striking or slamming.

When necessary, clean the glass. For the inside surface of the glass, we recommend using a damp paper towel dipped in gray ash. Rub the inside of the glass with a circular motion. When all the deposits are removed, clean up with window cleaner or with commercial stove glass cleaners, which are available from your local dealer. Use this type of cleaner for the outside surface as well. Never attempt to clean the glass while the fire is burning or while the glass is hot. Remove deposits by following the instructions provided with the cleaner. Wipe the cleaner off with a soft cloth, or black & white newsprint.

> **Important:** scratching or etching the glass will weaken the integrity of the glass. Do not use a razor blade, steel wool, or any other abrasive material to clean the glass. Use a cleaner specifically manufactured for woodstoves only.

The front door glass is a ceramic, thermal shock-resistant glass, made specifically for use in woodstoves. Do not use any replacement glass other than the ceramic glass manufactured and supplied for use in this woodstove. Replacement glass is available through your local dealer.

Replace the door glass immediately if broken or chipped. Contact your local dealer for replacement glass. The glass kit includes instructions and everything needed for the repair. If you replace the glass yourself, wear work gloves and safety glasses.

Required Glass Kit: PN: 90-58215.

Troubleshooting

Common Issues

Virtually all woodstove operators experience basic common problems at one time or another. Most are correctable and generally require only a minor adjustment of the stove, installation, or operating technique. In cases where weather conditions dramatically affect stove performance, the problems are typically temporary and solve themselves once the weather changes.

If you question whether your stove is producing adequate heat, the best way to troubleshoot the problem is to monitor the temperature of the stack no more than 12 inches (30 cm) above the flue collar. A 400° F (200° C) stovepipe confirms the stove is supplying sufficient heat. Keep in mind that your house itself will regulate room/house temperatures. How well the walls, floors and ceilings are insulated, the number and size of windows, the tightness of outside doors, and the construction or style of your house (vaulted ceilings or other open spaces which collect large percentages of heat, ceiling fans, etc.) all are determining factors of room temperature.

Your stove's performance is also dependent on its installation. One common cause of poor performance is an oversized chimney flue. Oversized chimney flues result in decreased draft, which prevents the smoke from rising out the chimney. Oversized flues are also more difficult to heat effectively, especially when burning a high efficiency stove. Cool flue temperatures inhibit the establishment of a strong draft (and encourage the accumulation of creosote). The lack of a strong draft will cause the fire to die down and may even force smoke to pour into the room.

If your chimney is the proper size and a strong draft is not easily established, there is the possibility that the chimney is too cold. Again, hot chimneys promote stronger drafts. Opening a window briefly in the room while lighting the stove may help.

Other draft guidelines are as follows:

An **"AIRTIGHT" HOUSE**: The air supply (infiltration) to the interior of the house may be inadequate if your home is super-insulated or especially well sealed. This phenomenon of air starvation within the building is exacerbated if exhaust fans, such as clothes dryers, bathroom fans or cook stove exhaust fans, are in operation within the home. Outfitting your stove with the optional outside air adaptor connected to an air duct, which leads to the outside of the building, can correct this problem.

Tall Trees or Buildings: These obstructions, when located close to the top of the chimney can cause chronic or occasional downdrafts. When selecting a site for a new chimney, consider the placement of other objects near the proposed chimney location.

Wind Velocity: Generally, the stronger and steadier a wind, the stronger (better) the draft. However, "gusty" wind conditions can cause erratic downdrafts. For consistent problems, consider a high wind cap, such as the Vacu-Stack.

Barometric Pressure: Chimney drafts are typically sluggish on balmy, wet or muggy days (low barometric pressure). This is a weather-related phenomenon, which generally is self-correcting as the weather changes.

Briskness of Fire: The hotter the fire in your stove, the hotter your chimney and, therefore, the stronger the draft.

Breaks in the Venting System: An unsealed clean-out door at the bottom of the chimney, leaky stovepipe joints, a poor stovepipe-to-thimble connection, missing caps, or a leaky chimney all can cause inadequate draft.

Seasonal Factors: Early fall and late spring are generally difficult seasons in which to establish proper drafts. The colder the outside air is relative to room temperature, the stronger the draft.

Operating the Stove

As outlined above, there are days when a good draft is just not easy to establish. The causes are usually seasonal factors or a cold chimney. Try starting the fire by using small kindling and fuel to obtain a quick, hot fire. Tend the fire frequently with small fuel until the chimney is hot and the draft is well established. Sometimes, partially opening a first floor window briefly will help quickly get draft established.

TROUBLESHOOTING GUIDE

PROBLEM	POSSIBLE CAUSE	SOLUTIONS
STOVE SMOKES	Operating Technique	Fully open the primary air control one minute before opening doors, and ensure the bypass is open before opening door.
	Cold Chimney or reverse draft	Preheat the chimney when first starting a fire. Briefly open a window in the room containing the stove.
	Blocked Chimney	Examine the chimney and stovepipe for blockage or creosote accumulations.
	Oversized Chimney	Reline the chimney to the appropriate diameter
	Undersized Chimney	Install a draft inducer or replace the chimney.
	Chimney Too Short	Lengthen the chimney.
	Air Infiltration Into The Chimney	Seal chimney connections and openings. Check clean-out doors.
	Bypass not closed	Ensure that the bypass door is closed when the catalyst is in the active range.
	Catalyst not functioning	Inspect catalyst for damage, ash build-up, or plugging. Brush catalyst with a soft-bristled brush, or vacuum lightly. Replace if required. Follow instructions to ensure catalyst light-off.
	Not burning proper fuel	Ensure cordwood is seasoned and dry.
	More Than One Appliance Connected to the Flue	Disconnect all other appliances and seal openings.
BACK-PUFFING OR GAS EXPLOSIONS	Operating Technique	Fully open the primary air control one minute before opening the door and keep it fully open for a few minutes after reloading. Ensure the bypass door is open before opening the door
	Extra Low Burn Rate	Burn the stove at a higher burn rate.
	Chimney Down-draft	Install a chimney cap.
	Excessive Ash Build-up	Empty the ash pan more frequently. Increase efficiency of burns, and avoid using poor quality or green wood.
UNCONTROLL-ED OR SHORT BURN	Unsealed or Open Door	Close the door tightly or replace the gaskets. Air leakage around glass gasket – replace gasket
	Excessive Draft	Check the installation. Operate at LOW BURN. Install stovepipe damper. Draft in excess of 0.1 wc should be corrected with a stovepipe damper(s)
	Extra Long Chimney	Shorten the chimney. Install stovepipe damper(s).
	Oversized Chimney	Reline the chimney to the proper diameter.
	High Winds or Hilltop Location:	Install a chimney cap.
INSUFFICIENT HEAT	Poor Quality, low Btu content, or Green Wood	Use only air-dried wood, preferably dried at least one year. Use a wood with a high Btu content if available.
	Low Burn Rate	Operate the stove at a higher burn rate.
	Cold Exterior Chimney	Reline or insulate the chimney.
	Leaky Stovepipe or Chimney	Check the installation. Replace with a pre-fabricated insulated chimney system or a properly sized masonry chimney.
	Too Much Heat Loss From House	Add insulation, use energy efficient windows, or caulk windows, and seal openings in home.
	Excessive Ash Build-up	Empty the ash pan more frequently. Increase efficiency of burns, and avoid using poor quality or green wood.
BLISTERING OF FINISH	Operating Technique	Do not over-fire the stove. Monitor stove temperatures. Use seasoned wood only.
	Excessive Draft	Check the DRAFT. A damper may be required. Operate the stove at a LOW BURN range.

Additional Catalyst Troubleshooting Guide

PROBLEM	POSSIBLE CAUSE	SOLUTIONS
FLY ASH BUILD UP ON CATALYST	Catalyst has not maintained light-off temperature	Brush cold combustor with soft-bristled brush or vacuum lightly. Follow instructions in the manual for a proper catalyst light-off
	Burning materials that cause a lot of char and fly-ash	Don't burn cardboard, gift wrap paper, or garbage. Burn only dry, seasoned wood, per the owner's manual.
	Bypass closed too soon	Follow instructions in the manual for a proper catalyst light-off
CATALYST PLUGGING OR MASKING (SOOT/CRESO-TE)	Burning wet, pitchy woods, or burning large loads of small diameter wood with the combustor in the operating position without catalyst light off occurring	Burn dry seasoned wood. Follow instructions in the manual for a proper catalyst light-off, and ensure catalyst light-off as occurred before closing bypass damper. It may be possible to burn the soot or creosote off by building a hot fire, and allowing the stove to run until the catalyst is well within the operating range before closing the bypass. Continue to run the stove at a high temperature for one hour, while ensuring the catalyst stays in the upper operating range, but not too hot.
WARPING OR BOWING OF THE CATALYST	Excessive catalyst temperatures for long periods of time.	Ensure that the catalyst remains in the operating zone, and does not get to hot. Reduce air control settings for a lower burn rate to ensure catalyst temperatures do not exceed the operating range.

Replacement Parts & Optional Accessories

PART #	DESCRIPTION
	Replacement Parts
5030-045	Hinge Bushing
5022-028	Hinge Pin
5022-026	Hinge Plate
5021-041	Secondary Combustion Tube #1
5024-042	Secondary Combustion Tube #2
5024-043	Secondary Combustion Tube #3
5210-2330	Tie Rod
7200-525	Catalyst Temperature Probe
	REPLACEMENT KITS AND ACCESSORIES
90-57210	BLOWER KIT
90-53220	OUTSIDE AIR KIT
90-68210	REAR HEAT SHIELD KIT
90-58230	GASKET KIT
90-58215	GLASS KIT
90-71240	DOOR HANDLE KIT
90-73240	DOOR LATCH KIT
90-70210	SIDE DOOR LOCK KIT
90-76240	BAFFLE KIT
3050-020	CATALYST REPLACEMENT 2/24 MANUFACTURE DATE AN ON (2 REQUIRED)
90-54240	ASH PAN KIT

Refer to the Illustrated Parts list for further detail about stove components, available online at www.hearthstonetech.com.

SAFETY LABEL



LIMITED WARRANTY

These warranties give you specific legal rights. You may also have other rights, which vary from State to State.

Hearthstone Quality Home Heating Products, Inc. (Hearthstone) warrants to the original retail purchaser only (the "Original Purchaser") the new appliance manufactured by Hearthstone, purchased by the Original Purchaser and installed by an authorized Hearthstone dealer or their designated representative against any of the occurrences listed in this document that result from defects in material or workmanship. This warranty is not transferrable. All obligations of Hearthstone under this document commence on the date of the Original Invoice (the "Purchase Date"). The term "Limited Lifetime" is defined as 10 years from the beginning of warranty coverage.
Hearthstone appliances are designed to be operated only with the fuels listed in your owner's manual.

Catalytic combustor LIMITED LIFETIME WARRANTY: The catalytic combustors are covered directly by the combustor manufacturer, Applied Ceramics. Included with your stove you will find the LIMITED LIFETIME WARRANTY for the catalyst, as well as a warranty card.

Catalyst Model Number: ACI-6M2 Catalyst Manufacturer: APPLIED CERAMICS

APPLIED CERAMICS warrants to the consumer who purchases a FIRECAT STEEL COMBUSTOR as a component in an EPA certified solid fuel appliance, to replace at no charge to the consumer the FIRECAT STEEL COMBUSTOR that ceases to function with two (2) years from the date of purchase by the original consumer, provided that the following conditions are met:

(1) A copy of the original bill of sale that includes place and date of purchase must be submitted with the warranty claim.
(2) The original FIRECAT STEEL COMBUSTOR must be returned to APPLIED CERAMICS
(3) The FIRECAT STEEL COMBUSTOR must not have been mechanically abused, nor must the wrong fuels have been used in the appliance.

If after two years the FIRECAT STEEL COMBUSTOR fails to function, the prorated warranty will allow replacement at the following special price schedule:

Year 3	$130.00
Year 4	$140.00
Year 5	$150.00
Year 6	$160.00
Year 7 and after	at current retail price

Conditions 1, 2, and 3 also apply to the Prorated portion of the warranty. Any EPA certified solid fuel appliance will receive one replacement catalyst for each defective catalyst returned during the three year period. The consumer will be responsible for any removal, any servicing, and return of any items required for filing the warranty claim. This warranty is APPLIED CERAMIC'S exclusive warranty, and APPLIED CERAMICS, disclaims any other express or implied warranty for the FIRECAT STEEL COMBUSTOR, including any warranty or merchantability fitness for a particular use.

Ensure the catalyst is well wrapped and padded for shipment in bubble wrap, or similar material. Ship the catalyst with padding inside of a cardboard box.

All warranty claims must include $12.50 for postage and handling within the continental U.S. Alaska and Canada claims must include $35.00.

Please allow 2-3 weeks for delivery. Order online @ www.firecatcombustors.com

Please read and understand the full warranty. Please return the completed warranty card promptly to Applied Ceramics. The warranty card, and any warranty claims can be shipped to:

Applied Ceramics
55555 Pleasantdale Road
Doraville, GA, 30340

Stove components Limited Warranty

Warranty Period	Wood	Gas	Pellet	Covered Components
Limited Lifetime	X	X	X	Stone
	X	X	X	Cast iron not listed elsewhere
	X			Clean burning air supply system*
5 Year	X	X	X	Door handles and latches
	X	X	X	Steel Components and Firebox
		X		Burner and logs
3 Year			X	Burn Pot and Baffles
2 Year	X	X	X	Appliance Electrical and Gas Components
	X	X		Refractory, Vermiculite Panels, Baffles
1 Year	X	X	X	Enamel finish against peeling or fading
	X	X	X	Accessories
	X	X	X	Glass
	X			Ash Grate
	X	X	X	All components not listed elsewhere

Any parts repaired or replaced during the limited warranty period will be warranted under the terms of the limited warranty for a period not to exceed the remaining term of the original limited warranty or one year, whichever is longer.

Parts: Hearthstone will replace through an authorized dealer, defective parts covered by the foregoing warranty at no charge.

Labor: Within the first (1st) year after the Purchase Date, Hearthstone will pay for warranty labor performed by an authorized Dealer at Hearthstone's published labor rates in effect at the time the labor is performed only if the appliance is installed by an authorized dealer or their designated representative. Otherwise or thereafter, the Original Purchaser is responsible for the cost of labor.

Shipping cost for parts: Within the first ninety (90) days after the Purchase Date, Hearthstone will pay for the shipping of appliance parts covered by any of the foregoing warranties to and from Hearthstone or an authorized Dealer, as the case may be. Thereafter, the Original Purchaser is responsible for all shipping costs related to shipping appliance parts to and from Hearthstone or an authorized Dealer, as the case may be.

Shipping cost for the appliance: Within the first (1st) year after the Purchase Date, if the Original Purchaser is instructed to return the appliance to Hearthstone or an authorized Dealer for repair, Hearthstone will pay fifty percent (50%) and the Original Purchaser will pay fifty percent (50%) of the shipping costs related to shipping the appliance to and from Hearthstone or an authorized Dealer, as the case may be. Thereafter, the Original Purchaser is responsible for one hundred percent (100%) of all of the shipping costs related to shipping the appliance to and from Hearthstone or an authorized Dealer, as the case may be. Notwithstanding any other provision of this document, in no event will Hearthstone pay for any Dealer fees or other fees for pick up or delivery of the appliance returned for repair; the Original Purchaser shall be responsible for any such fees.

EXCLUSIONS & CONDITIONS

The warranties contained in this document do not cover, nor is Hearthstone responsible for:

1. Damages resulting from:
   a. Failure to install, operate, or maintain the appliance in accordance with the owner's manual, operating instructions, installation instructions, or safety rating label provided with the appliance.
   b. Over-firing the appliance. Over-firing can be identified by, but not limited to, warped cast iron or steel, rust colored cast iron, bubbling, cracking and discoloration of steel or enamel finishes.
   c. Failure to install the appliance in accordance with all national or local building codes.
   d. Shipping or improper handling.
   e. Improper operation, abuse, misuse, continued operation with damaged, corroded, or failed components, accident, or improper/incorrect service or repairs.
   f. Environmental conditions, inadequate ventilation, negative pressure, or improper drafting caused by tightly sealed constructions, insufficient make-up air supply, or air handling devices such as exhaust fans, forced air furnaces, or other such causes.
   g. Damage caused by direct exposure to water.
   h. Use of fuels other than those specified in the owner's manual.
   I. Installation or use of components not supplied with the appliance, or any other components not expressly authorized and approved by Hearthstone.
   J. Modifications of the appliance not expressly authorized and approved by Hearthstone in writing
   K. Interruptions or fluctuations of electrical power supplied to the appliance.
2. All stones are warranted against cracking or breakage due to thermal stress, excluding surface and hairline cracks and scratches that do not affect the operation, or safety of the appliance.
3. Repair or replacement of wear parts. Such parts that are subject to normal wear and tear during the warranty period such as paint, gaskets, baffles, refractory materials, ash grates, and glass.
4. Damage resulting from installation, modification, alteration, repair or service of the appliance by any party other than an authorized Hearthstone dealer (a "Dealer") or their designated representative, or Hearthstone.
5. Damage due to water or condensation due to installation of the appliance in a high moisture area.
6. Damage due to installation of the appliance in an atmosphere contaminated by damaging chemicals, including but not limited to chlorine, fluorine or salts.
7. Scratches on glass, enameled surfaces or stones due to mechanical abrasion.
8. Noise caused by expansion or contraction caused by the heating and cooling of the appliance.
9. Odors caused by the heating of the appliance, or surrounding materials
10. Consequential damage caused by leaking of condensate during startup
11. A defect in any part of the appliance if the Original Purchaser fails to comply with Hearthstone's or a Dealer's request to ship the part or the appliance to Hearthstone or a Dealer, as the case may be.
12. Replacement stones and enameled parts are taken from current stock, and may not match originals in color, grain, or pattern. Hearthstone will supply replacement parts for discontinued parts in finishes or colors as available, or at their discretion.
13. Hearthstone's obligation under this warranty does not extend to the appliance's ability to heat the desired space. Information is provided to assist the customer and the dealer in selecting the appropriate appliance for the application. Consideration must be given to appliance location and configuration, environmental conditions, insulation and air tightness of the structure.

THE WARRANTIES CONTAINED IN THIS DOCUMENT ARE EXCLUSIVE AND ARE GIVEN BY HEARTHSTONE AND ACCEPTED BY THE ORIGINAL PURCHASER IN LIEU OF ALL OTHER EXPRESS WARRANTIES AND ANY OBLIGATIONS, LIABILITIES, RIGHTS, CLAIMS, OR REMEDIES IN CONTRACT OR TORT, WHETHER OR NOT ARISING FROM HEARTHSTONE'S NEGLIGENCE, ACTUAL OR IMPUTED. ALL IMPLIED WARRANTIES, INCLUDING THE WARRANTIES OF MERCHANTABILITY AND FITNESS FOR A PARTICULAR PURPOSE, ARE GIVEN ONLY TO THE EXTENT REQUIRED BY FEDERAL OR STATE LAW. EXCEPT AS OTHERWISE REQUIRED BY STATE LAW, UPON THE EXPIRATION OF THE EXPRESS LIMITED WARRANTIES CONTAINED HEREIN, NO IMPLIED WARRANTIES, INCLUDING THE IMPLIED WARRANTIES OF MERCHANTABILITY OR FITNESS FOR A PARTICULAR PURPOSE, SHALL APPLY TO THE SUBJECT APPLIANCE. SOME STATES DO NOT ALLOW LIMITATIONS ON HOW LONG AN IMPLIED WARRANTY LASTS, SO THE ABOVE LIMITATION MAY NOT APPLY TO YOU.

THE WARRANTIES CONTAINED IN THIS DOCUMENT EXTEND ONLY TO THE ORIGINAL PURCHASER OF THE APPLIANCE WARRANTED HEREUNDER. THEY ARE NOT TRANSFERRABLE AND DO NOT EXTEND TO ANY SUBSEQUENT OWNERS.

UNDER NO CIRCUMSTANCES SHALL HEARTHSTONE BE LIABLE TO THE ORIGINAL PURCHASER OR ANY OTHER PERSON FOR ANY INCIDENTAL OR CONSEQUENTIAL DAMAGES, INCLUDING BUT NOT LIMITED TO DAMAGE TO PROPERTY OR PERSONAL INJURIES, WHETHER ARISING OUT OF LOSS OF USE, BREACH OF WARRANTY, TORT, OR OTHERWISE, EVEN IF HEARTHSTONE HAS BEEN APPRAISED OF THE POSSIBILITY OF SUCH DAMAGES. SOME STATES DO NOT ALLOW THE EXCLUSION OR LIMITATION OF INCIDENTAL OR CONSEQUENTIAL DAMAGES, SO THE ABOVE LIMITATION OR EXCLUSION MAY NOT APPLY TO YOU.

QUALIFYING FOR WARRANTY COVERAGE

To obtain performance of any obligation under this document, the Original Purchaser must, within the applicable warranty time period, contact their original Hearthstone dealer, or the current responsible local Hearthstone dealer, for instructions regarding the return of defective parts for repair, the return of the appliance for repair, or to schedule a Dealer service call. The Original Purchaser should refer to the Dealer Network search engine contained on Hearthstone's Web site (www.hearthstonestoves.com) if the original dealer is not available, to find a Hearthstone dealer nearest to the Original Purchaser's location.

REMEDY

The remedy for any breach of the foregoing warranties will consist of repair or replacement, at Hearthstone's option, of any covered defect in the appliance. When the Original Purchaser contacts a Hearthstone Dealer, the Dealer on behalf of Hearthstone, as the case may be, will instruct the Original Purchaser to either return the defective part, or the entire appliance (if requested), to the Dealer or Hearthstone or allow a Dealer to make a service call at the place where the appliance is located. Hearthstone may require that a digital picture be provided to support the claim. Notwithstanding any other provision of this document, the Original Purchaser shall pay for any fees and service charges related to a Dealer's service call or the shipping charges associated with the return.

WARRANTY REGISTRATION

The Original Purchaser can complete their warranty registration on our website at www.hearthstonestoves.com, or send a completed and signed Warranty Registration Form, which is enclosed in the appliance document packet, to the following address:

Hearthstone Quality Home Heating Products, Inc.
Warranty Department
317 Stafford Avenue
Morrisville, VT 05661

NOTE: SENDING IN THE SIGNED WARRANTY REGISTRATION FORM IS *NOT REQUIRED* AS A CONDITION OF WARRANTY COVERAGE OR HEARTHSTONE'S PERFORMANCE.

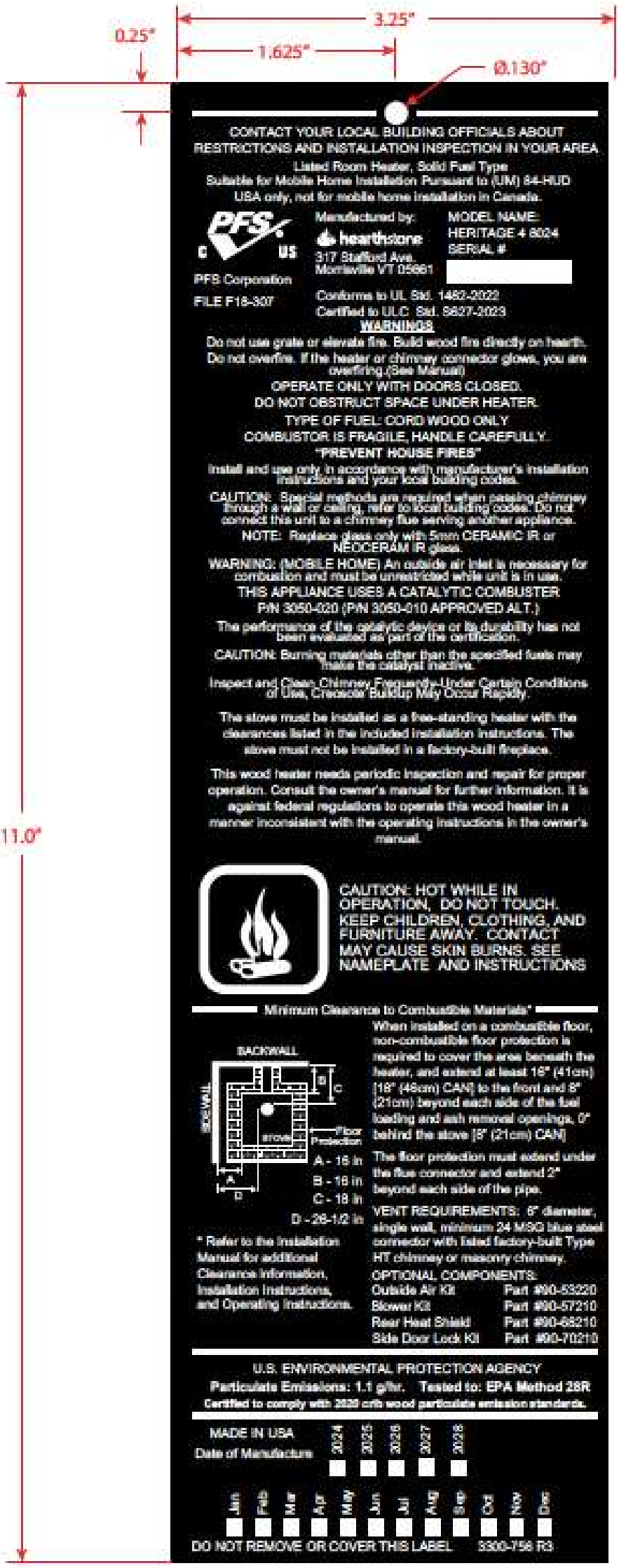

SIDE 1

SIDE 2

1.) LABEL WILL BE BLACK WITH SILVER LETTERS

2.) LABEL WILL BE .020 ALUMINUM

3.) SERIALIZE LABELS

4.) (1) Ø.130" CABLE MOUNTING HOLE

REVISIONS				
ECO	REV.	DESCRIPTION	DATE	APPROVED
	A		10/11/23	SPB

VIEWS ARE THIRD ANGLE

This document submitted by HearthStone is the property of HearthStone and may contain information of a proprietary nature and shall not be copied or duplicated in whole or in part or used in whole or in part for any purpose other than that which is necessary for the preparation of bids or fabrication. Please return to HearthStone.

UNLESS OTHERWISE SPECIFIED:
TOLERANCES ARE:
FRACTIONS ± 1/64 DECIMALS .XX± .015 .XXX± .005 ANGLES ±1/2°
1.) DIMENSIONS ARE IN INCHES / MM
2.) ALL MACHINED SURFACES TO BE DE-BURRED AND SMOOTHED
DO NOT SCALE DRAWING

CAD GENERATED DRAWING, DO NOT MANUALLY UPDATE

	APPROVALS	DATE
DRAWN	SPB	10/11/23
CHECKED		
ENG APPR.		
MFG APPR.		
Q.A.		

hearthstone

HEERITAGE 4 8024

Safety Rating Label

SIZE A | DWG. NO. 3300-765 | REV. 0

SCALE NONE | SHEET 1 OF 1

APPENDIX 8: Photographs of test set up

POLYTESTS
TESTING THROUGH YOUR REALITY

Dilution picture Dia 8 no. EG-029

Polytests Services Inc. 695 B rue Gaudette,St-Jean-sur-Richelieu Québec, Canada, J3B 7S7



Velocity ports at 90 degrees and tunnel temperature sensor location

Particulate sample extraction ports located 48 inches under (requirement 4D=32 inches minimum) velocity ports and 18 inches above downstream Tee. (Requirement 2D=16 inches minimum)

Adjustable damper for flow adjustments

Extraction blower

POLYTESTS
TESTING THROUGH YOUR REALITY



Total length between hood and sampling port: 23 feet.

POLYTESTS
TESTING THROUGH YOUR REALITY



Two 8 inches elbow with horizontal mixing section.

60 inches horizontal run between two elbows. Mixing section, No mixing baffle. 8 inches diameter pipe

Hood diameter 32 (requirement 4D=32 inches minimum) inches and height of 24 inches (requirement 3D=24 inches minimum)

All pipe joints are sealed.

POLYTESTS
TESTING THROUGH YOUR REALITY

Stack sampling



Gas analysis and temperature probe

chimney support



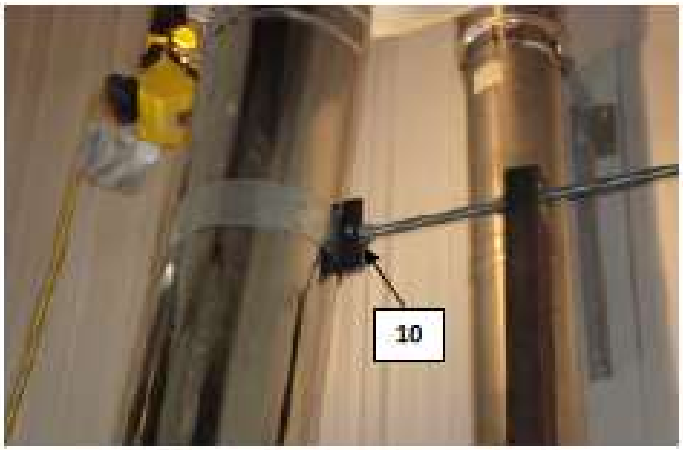

9 : Temperature and gas analyser sampling ports located 9 feet above platform

10 : Exhaust system support bracket

POLYTESTS
TESTING THROUGH YOUR REALITY

Draft sampling



14 : Draft sampling port located 6 in. from the flue outlet

POLYTESTS
TESTING THROUGH YOUR REALITY

Equipment's

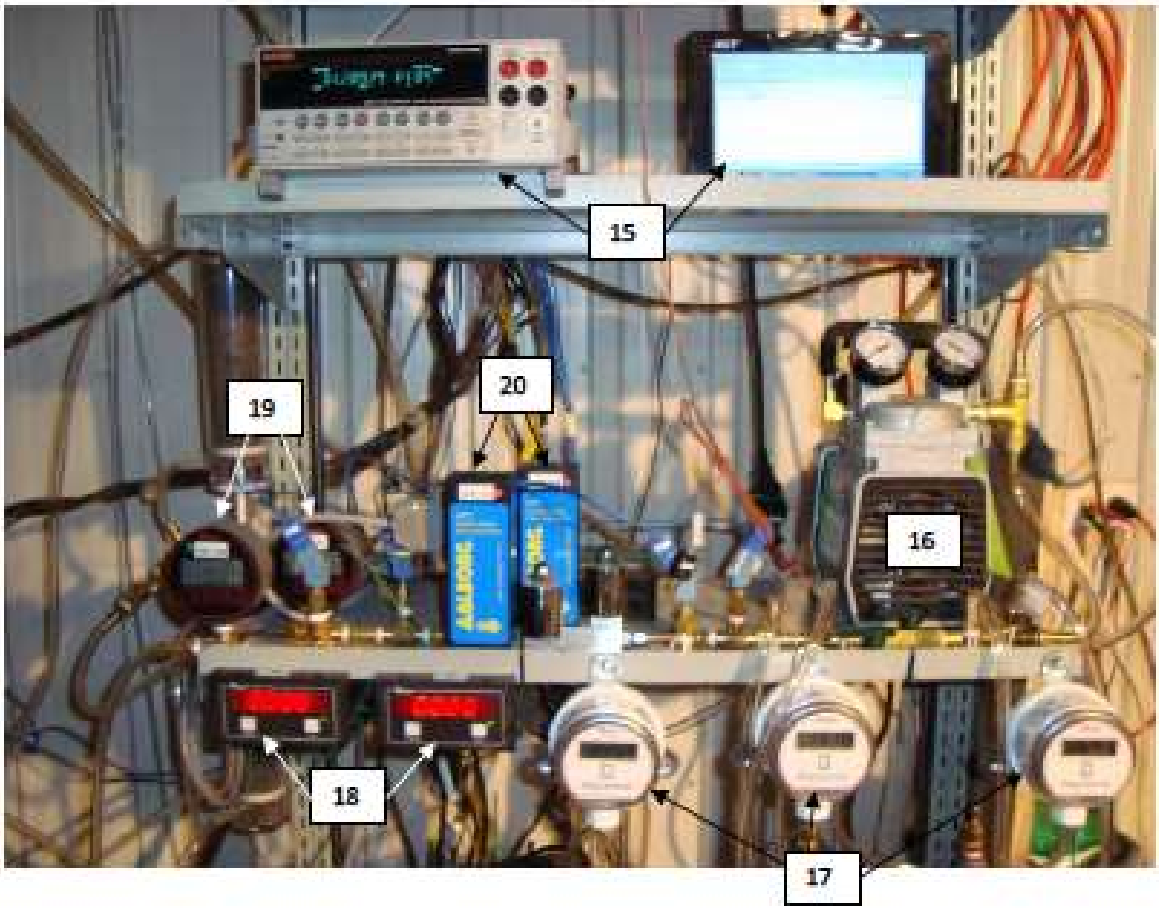

15	: Acquisition system
16	: Vacuum pump
17	: Digital manometer
18	: Digital read out for mass flow meter
19	: Digital vacuum gage
20	: Mass flow meter

POLYTESTS
TESTING THROUGH YOUR REALITY

Gaz analyser



Reference dry gas meter



POLYTESTS
TESTING THROUGH YOUR REALITY

Dry gas meter for train 1, train 2 and room filter.



POLYTESTS
TESTING THROUGH YOUR REALITY

Dilution tunnel sample system

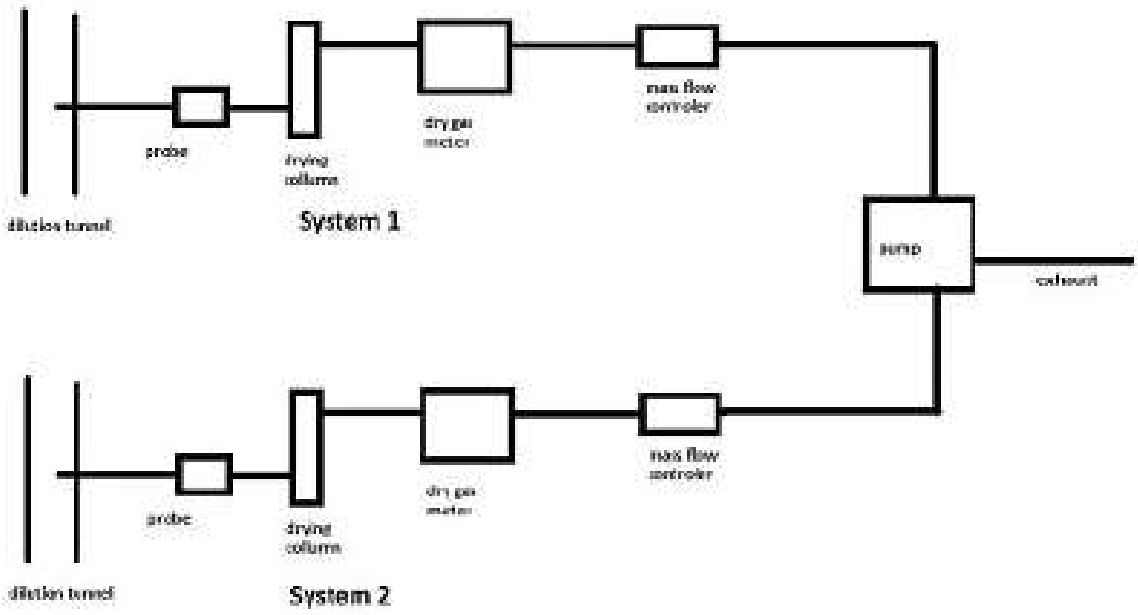

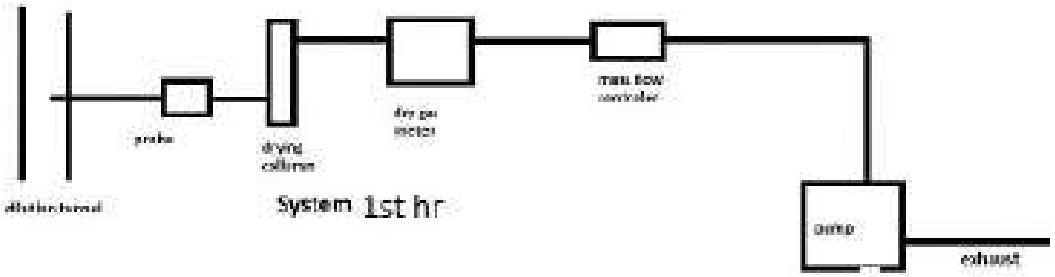

POLYTESTS
TESTING THROUGH YOUR REALITY

Dilution tunnel

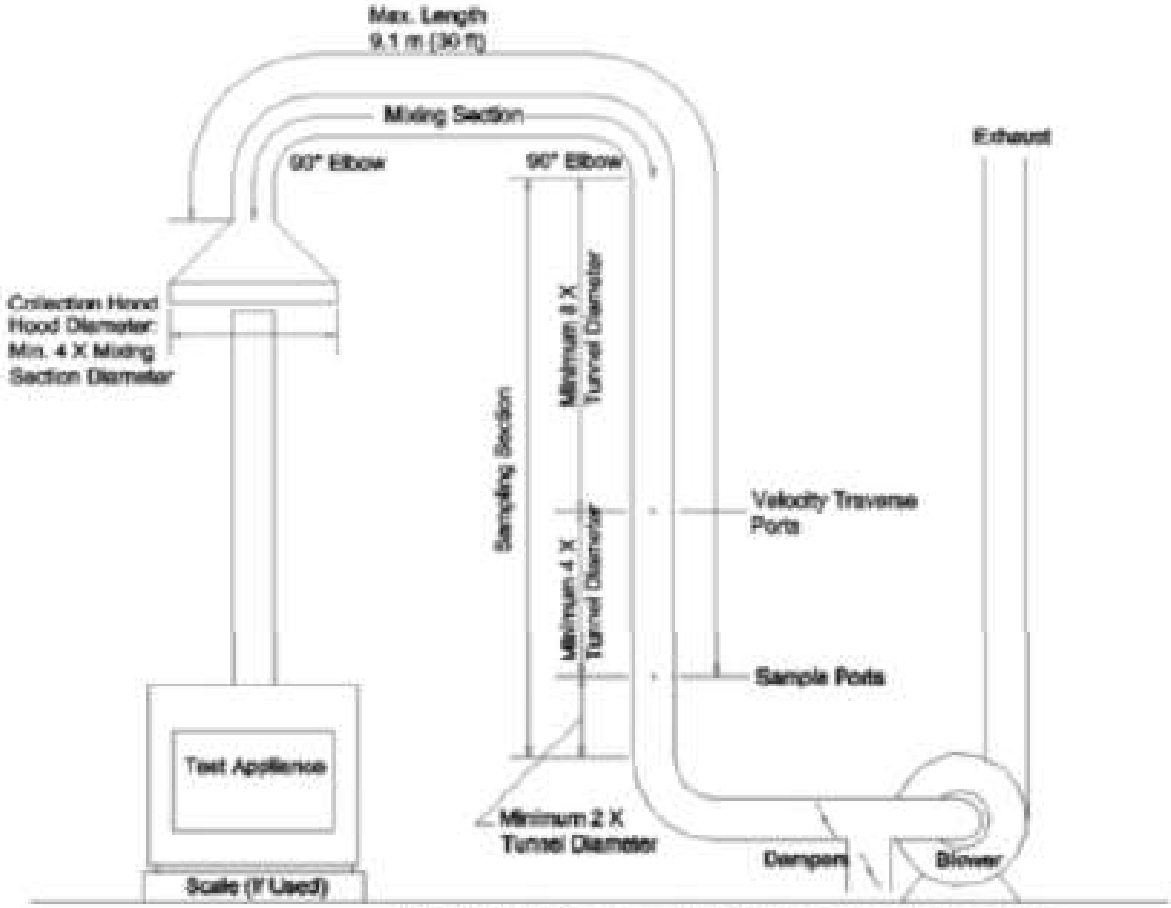

FIG. 3 Steel-Constructed Dilution Tunnel Apparatus

APPENDIX 9: Test load photographs

Air inlet maximum open for high burn rate	Air inlet medium high setting for cat.3 burn rate
	
Air inlet medium low setting for cat.2 burn rate	**Air inlet lowest opening for minimum burn rate**
	

Front view stove setup	Left side view of the Stove
	
Back side view of the stove	**Right side view of the stove**
	

Run 1 October 2nd 2023	
Testing load	Preburn load
	
Charcoal / coal bed for load	Load in stove
	

Run 2 October 3rd 2023	
Testing load	Preburn load
	
Charcoal / coal bed for load	Load in stove
	

Run 3 October 4th 2023	
Testing load	Preburn load
	
Charcoal / coal bed for load	Load in stove
	

Run 4 October 5th 2023	
Testing load	Preburn load
	
Charcoal / coal bed for load	Load in stove
	

Run 5 October 10th 2023	
Testing load	Preburn load
	
Charcoal / coal bed for load	Load in stove
	

Run 6 October 18th 2023	
Testing load	Preburn load
	
Charcoal / coal bed for load	Load in stove
	

Run 7 October 19th 2023	
Testing load	Preburn load
	
Charcoal / coal bed for load	Load in stove
	

APPENDIX 10: Laboratory Operating Procedures

POLYTESTS Services inc.

SFBA EMISSIONS AND EFFICIENCY TESTING LABORATORY OPERATING PROCEDURE

INTRODUCTION

This document provides a step-by-step guide for the technician conducting tests to EPA standard requirements. Procedures outlined here, when followed, will result in tests in conformance with EPA Methods 28R, ASTME2780, ASTME2515, ASTM E2618, Method 28WHH, Method 28 PTS, Method ALT-125, ASMTE 3053, ALT-134, ASTME2779

The primary measurements to be made are particulate emissions rates. The technician's duties include the following steps.

1. Incoming inspection of test units.
2. Set-up of test units.
3. Preliminary testing to establish unit operating procedures and familiarity with operating controls.
4. Calibration of test equipment.
5. Set-up, checking and operation of sampling apparatus.
6. Conduct of tests including complete record keeping and data recording for non-automated functions.
7. Operation of hardware and software included in automatic data acquisition system.
8. Review and analysis of data at test completion to ensure test validity.

The technician running this test must be familiar with the following documents, which are to be kept in the laboratory at all, times.

EPA METHODS

1. EPA METHODS 28R
2. ASTME2780
3. ASTME2515
4. ASTM E2618
5. METHOD 28WHH
6. METHOD 28 PTS
7. ALT-125
8. ASMTE 3053
9. ALT-134
10. ASTME2779

I. APPLIANCE INSPECTION AND SET-UP

A. INCOMING INSPECTION

1. Check for completeness of unit including parts, accessories, installation and operating instructions, drawings and specifications etc. Note any discrepancies or missing parts or information.
2. Check for shipping damage. If damage has occurred, notify the laboratory manager. In some cases, repairs may be made, provided the manufacturer and laboratory manager concur that repairs will not affect the unit's performance. If damage is irrepairable, a new unit will need to be obtained.
3. Note whether unit is catalytic of non-catalytic.
4. Mark unit with manufacturer's name, model number, work order number and date received.
5. If unit is safety listed, note label data including listing agency and serial number. If unit is not listed, mark all data sheets "UNLISTED". Test results will not be released until unit passes safety tests without modification unless authorized by laboratory manager.

B. UNIT SET-UP

1. All new units must be operated for a breaking in period as follows.

    a) Fifty (50) hours at medium burn rate with Douglas Fir scrap or cordwood. Between 18% and 25% MC.

    During these break-in runs the unit may be connected to a lab chimney and fuel additions noted into the corresponding data acquisition file. For catalytic units, a thermocouple must be installed in the catalyst.

    Record catalyst temperature at 1-hour intervals or on chart recorder. Operating should continue until data shows at least fifty (50) hours of operation with catalyst temperature in excess of 500 degrees Fahrenheit (active range).

    For non-catalytic units a stack thermocouple should be installed and stack temperature recorded at 1-hour intervals. 50 hours minimum burn time with a stack temperature of at least 250 degrees Fahrenheit is required.

    Once break-in is completed, allow unit to cool. Clean unit thoroughly.

2. Unit is to be placed on scale for testing. Prior to proceeding with verification process, scale should be turned on and allowed to warm up for one (1) hour minimum. Zero scale and check calibration with standard weights. One (1) 1 kg weight and one (1) 2 kg weight are provided for this purpose. Use scale verification test form no. EPA-7-TP to record results. If scale fails to reproduce weights within tolerance, check with laboratory manager before proceeding.
3. If scale checks out, place unit on scale and align so chimney will be centered in hood.
4. Attach chimney connector and chimney. Be sure all joints are sealed below sampling points. Chimney and connector should be cleaned with a wire brush. Be sure chimney connector terminates and chimney starts at proper level above scale platform. Chimney must be supported from scale so that it does not touch test enclosure or hood walls.
5. Thermocouples should be attached to surfaces of unit prior to testing. EPA requires a thermocouple on the bottom of the firebox. This must be installed prior to putting the unit on the scale. In some cases, the required thermocouple locations will be inaccessible on finished units. These units should have thermocouples installed by the manufacturer during construction. Check with the laboratory manager if problems are encountered in proper thermocouple attachment.
6. Measure firebox dimensions and record on data forms nos. EPA-2-TP. Make a three-dimensional sketch of the firebox including firebrick, baffles and obstructions. Calculate firebox volume in cubic feet with both addition and subtraction methods using forms nos. EPA-3-TP and EPA-4-TP. See Section 6.2.4 of EPA Method 28 for details of firebox volume determination.
7. If unit is catalytically equipped, additional thermocouples must be installed upstream and downstream of catalyst. Thermocouples should also be placed in the primary and secondary combustion chambers of all units.
8. Plug thermocouples into data acquisition system jacks making a check of locations and jack numbers for each test on data form no. EPA-5-TP.
9. Note that inserts are tested as if they are freestanding stoves.
10. Dilution tunnel should be cleaned prior to each certification test series and at anytime a higher burn rate follows a lower test burn rate.

SFBA EMISSIONS AND EFFICIENCY TESTING LABORATORY OPERATING PROCEDURE

II. SAMPLING SYSTEM – SET-UP

A. GAS ANALYSIS

1. Instruments should be turned on and allowed to warm up for one (1) hour minimum.

2. Calibrate analyzers as follows:

NOTE: Prior to proceeding with calibration, make sure to use NIST traceable calibration gas bottles. Adjust flow meter, if necessary, at each instrument to required flow value.

a) Using span gas, adjust span control to values specified on calibration gas label.
b) Using nitrogene, adjust zero controls to provide a 0.00 analyzer readout.
c) Repeat a) and b) until no further adjustment is required.
d) Check readout vs. calibration gases (2) labels.

The CO_2 and CO analyzers are "ZEROED" on nitrogen. The O_2 analyzer is spanned on air and set for 20.9%. It is zeroed on nitrogen as well.

3. Check for response time synchronization.

a) With no fire in unit, allow reading to stabilize (O_2 should be 20.93, CO and CO_2 should equal O).
b) Flow the calibration gas in the unit and start stop watch. Note the time required for each unit to reach .90 of the calibration gas bottle value. If all three analyzers reach this value within 15 seconds of each other, synchronization is adequate. If not, contact the laboratory manager. Synchronization is adjusted by internal instrument setting.

4. Set-up sample clean-up and water collection train as follows.

a) Load impingers as follows:
Impinger #1: 100 ml distilled water and 5 ml H_2SO_4
Impinger #2: 100 ml distilled water and 5 ml H_2SO_4
Impinger #3: Empty
Impinger #4: 200 – 300 grams silica gel (dry)

b) Place impingers in container and connect with "U TUBES". Grease carefully on bottom half of ball joint so that grease will not get into tubes.

c) Connect filter to first impinger and sample line to last impinger.

e. Leak check system as follows.

1) Plug probe.
2) Turn on sample system.
3) Observe sample flow rotometer and vacuum gauge. If necessary, use vacuum; adjust valve to set vacuum to the maximum inches Hg.
4) If the float in rotometer does not stabilize below 10 on scale, system must be resealed.
5) Repeat leak check procedure until satisfactory results are obtained.

f) Just prior to starting test, fill impinger container with water and ice and record ambiant conditions on data form no. EPA-8-TP.

B. DILUTION TUNNEL SAMPLE TRAIN SET-UP

1. Filters and holders.

a) Clean probes and filter holder front housings carefully and desiccate for at least 48 hours prior to use.
b) Filters should be numbered and filter and probe combinations labeled prior to use.
c) Weigh desiccated filters and probe-filter units on analytical balance. Record weights data form no. EPA-10-TP. Note that probe and front half of front filter are to be weighed as a unit.
d) Carefully assemble filter holder units and connect to sampling systems. Check "DRIERITE" columns for adequate dry absorbent (blue).

2. Leak checking.

a) Each sample system is to be checked for leakage prior to inserting probes in tunnel.
b) Plug probes and start samplers, adjust pump bypass valve to produce a vacuum reading of 10 inches Hg. (NOTE: During test, vacuum must not exceed 10 inches unless posttest leak check shows acceptable results.)
c) Allow vacuum indication to stabilize for two (2) minutes, then record time and dry gas (DGM_1) and (DGM_2) meter readings. Wait ten (10) minutes and record dry gas meter readings again (DGM_3, DGM_4).

NOTE: If mark, system is leaking too much and all seals should be checked.

d) Calculate leakage rate as follows.

1) System 1: $\frac{(DGM_3 - DGM_1)}{10} = CFM_1$

2) System 2: $\frac{(DGM_4 - DGM_2)}{10} = CFM_2$

If CFM_1 or CFM_2 is greater than .02 CFM, leakage is unacceptable and system must be resealed.

If CFM_1 or CFM_2 is greater than 0.04 X sample rate, leakage is unacceptable. For most tests, the sample rate will be about 0.15 CFM, thus leakage rates in excess of 0.04 X 0.15 = 0.006 CFM are not acceptable. Record leakage rates on form no. EPA-5-TP

e) Once leakage check is satisfactory, unplug probe and set flow to appropriate rate for test. This should be done in the minimum amount of time necessary and with the probes in ambient air. Do not insert probes in tunnel until the start of the test run. When flow is established, replug probes to prevent contamination.

III. TEST CONDUCT

A. FUEL LOAD

1. Determine optimum load weight by multiplying firebox volume in cubic feet by 7 or (10 and 12 for cordwood method). This is the load weight on an as-fired basis.
2. Determine piece size to obtain the requested load configuration and meet the test load weight criteria. The load should consist of the following: **TO BE DETERMINED**
3. Weigh out test load and adjust weight by shortening all pieces equally if necessary. Record individual piece load on form no. EPA-11-TP.

4. Measure and record moisture content of each fuel piece using Delmhorst moisture meter. Determine if fuel load moisture content is in required range. If not, construct new load using wood with required moisture content. All wood in the humidity chamber should be within range. Contact project manager if you cannot find suitable pieces. Record moisture of each individual piece load on form no. EPA-11-TP.

B. UNIT START-UP

1. Before lighting a fire, turn on dilution tunnel and set tunnel velocity to 500ft/min Record readings on data form no. EPA-9-TP.
2. Check draft imposed on cold stove with all inlets closed and a draft gauge in the chimney. If draft is greater than 0.005 inches water column, adjust tunnel to stack gap until draft is less than 0.005.
3. Check for ambient airflow around unit with hot wire anomometer. Must be less than 50 ft/min.
4. Check all equipment for proper operation. Analyzers should be on and in sample mode. Computer should be loaded with test program and awaiting test start command.
5. Zero scale and start fire with uncolored newspaper and kindling representing 10 % of test load with the same type of fuel.
6. Once kindling is burning well after 5 minutes, add splitted pieces having a bottom surface around 4 sq. inches and representing 25% of test load weight. Operate at high fire for 15 minutes. Then adjust settings to intended test run levels as per the manufacturers.
7. Following addition of pretest fuel load (splitted pieces), start computer for data logging.
8. All fuel additions, air intake settings and operational characteristics shall be noted with associated time stamp on form no. EPA-1-TP.

C. TEST RUN

1. Once the targeted test fuel bed weight is obtained, the test is to be started as follows:

   a) Insert the sample probes into the tunnel being careful not to hit sides of tunnel with probe tip.

   b) Check tunnel pitot tube for proper position. (Pitot should be carefully cleaned prior to each test.)

   c) Turn on probe sample systems and stack sampler.

   d) Open stove door, rake coals and load stove as follows: **TO BE DETERMINED**

   e) Close door or follow manufacturer's start-up procedures. (Five (5) minutes maximum time before all doors and controls must be set to final positions for duration of test. 15 minutes or 15% of lad burned allowed for ALT-125 method))

   f) An alarm will sound an audible signal at the (10) minutes intervals. This signals a reading interval. You must verify at each interval that the following readings are correctly logged by the data acquisition system and make observations of any unusual or non-routine events that could occur.

      1) Rotometer readings.
      2) Tunnel pitot tube reading.

(Zero regularly between readings)

      3) Gas meter readings.
      4) Temperature readings.
      5) Draft reading
      6) Test laod weight
      7) CO, CO_2 and O_2 readings
      8) Observations of any unusual or non-routine events.

   g) During the test, any condition approaching unacceptable limits will be noted. The filter probes and housings are installed in small holders just outside the tunnel. If the filter temperature gets too high, you will have to increase the water flow through the cooling unit until acceptable temperatures are obtained. In between readings, check on other equipment. Be sure dryers and filters are working and monitor impinger train for proper water and ice levels etc.

   h) When the fuel charge is consumed, it will signal end of test and shut down the sampling systems. When this occurs,

remove filter holder and probes from tunnel and impingers from sample line.

IV. POST TEST PROCEDURES

A. SAMPLE RECOVERY – FILTER TRAINS

1. Carefully clean outside of probes and filter housings with alcohol.
2. Disassemble filter holder and transfer filters to clean petri dish. Scrape gasket with scalpel and collect any loose material on filters.
3. Place probe and front half of first filter holders (still assembled) and filters in desiccator. Allow 48-hour desiccation before weighing.
4. Weigh probe filter holder units and filters at six (6) hour intervals minimum until weight change between weightings is less than 0.2 mg. Record all weights taken on data form no. EPA-10-TP.

B. CALCULATION OF RESULTS

The computer program carries out all final calculations. When run, it will ask for data from forms used during the test. Enter data as called for.

GENERAL

This guide cannot cover every possible contingency, which may develop during a particular test program. Many questions, which may arise, can be answered by a complete understanding of the test standards and their intent. When in doubt on any detail, check with the laboratory manager and be sure you understand the procedures involved.

It is critical that all spaces on the data forms be properly filled in. Each test must be represented by a complete record of what was done and when.

APPENDIX 11: Sample calculations

Validation du fichier de calcul avec les équations provenant des normes:
ASTM E2515-11
ASTME2618

Dry burn rate (BR)

Equation used

B415.1, 13.4

$$BR = \left[\frac{60W_{WD}}{\theta}\right]\left[\frac{100 - \%M_W}{100}\right]$$

Nomenclature

BR	Dry wood burn rate, kg/hr (lb/hr)
W_{WD}	Total mass of wood burned (wet basis) during the test run, kg (lb)
θ	Total time of test run, minutes
$\%M_W$	Average moisture in test fuel charge, wet basis, %
	To convert from dry basis to wet basis: % moisture wet basis =

Sample calculation

Data

W_{WD}	15,298 lbs
θ	160 min
$\%M_W$	16,81 %

Calculation

BR	2,165 Dry kg/hr

Volume of gas sample corrected to dry standard conditions ($V_{m(std)}$)

Equation used
ASTM 2515, equation 6

$$V_{m\,(std)} = K_1 V_m Y \left[\frac{P_{bar} + \left(\frac{\Delta H}{13.6}\right)}{T_m}\right]$$

Nomenclature

$V_{m\,(std)}$	Volume of gas sample , corrected to standard conditions, $dscm^3$ (dscf)
K_1	17.64 R/in Hg
V_m	Volume of gas sample
Y	DGM calibration factor
P_{bar}	Barometric pressure mmHg (in Hg)
Δ H	Average pressure at the outlet of the dry gas meter mm water (in. Water)
T_m	Absolute average dry gas meter temperature K (R)

Sample calculation

Data

V_m	30,27 dcf
Y	0,994587
P_{bar}	30,00 in Hg
Δ H	-0,7058 in Hg
T_m	538,0 R

Calculation

$V_{m(std)}$	28,92 dscf

Total amount of particulate matter collected (m_n)

Equation used

ASTM 2515, equation 12 $$m_n = F_1 + F_2 + \Delta PF$$

Nomenclature

m_n	Total amount of particulate matter collected, mg
F_{1+F2}	Particulate matter collected on filters, mg
ΔPF	Post-test weight gain of probe and filter holder assembly, mg

Sample calculation

Data

F_{1+F2}	0,002 g
ΔPF	0,001 g

Calculation

m_n 3,100 mg

Calculation based of train 2 data

Particulate concentration (C_S)

Equation used

ASTM 2515, equation 13

$$C_S = (0{,}001\ g/mg) \times \left(\frac{m_n}{V_{m\,(std)}}\right)$$

Nomenclature

C_s	Concentration of particulate matter in stack gas or dilution tunnel, dry basis, corrected to standard conditions, g/dsm^3 (g/dscf)
m_n	Total amount of particulate matter collected in the sampling train, mg
$V_{m(std)}$	Volume of gas sample measured corrected to dry standard conditions, dsm^3 (dscf)

Sample calculation

Data

m_n	3,100 mg
$V_{m(std)}$	28,92 dscf

Calculation

C_s 0,000107 g/dscf

Calculation based of train 2 data

Particulate concentration for room air (C_r)

Equation used

ASTM 2515, equation 14

$$C_r = (0{,}001\ g/mg) \times \left(\frac{m_r}{V_{mr(std)}}\right)$$

Nomenclature

C_r	Concentration of particulate matter in room air, dry basis, corrected to standard conditions, g/dsm^3 (g/dscf)
m_r	Total amount of particulate matter collected in the sampling train, mg
$V_{mr(std)}$	Volume of room air sample measured corrected to dry standard conditions, dsm^3 (dsc

Sample calculation

Data

m_r	0,100 mg
$V_{mr(std)}$	22,23 dscf

Calculation

C_r	0,000004 g/dscf

Calculation based of train 2 data

Adjustment factor for alternative pitot tube placement (FP)

Equation used

ASTM 2515, equation 1

$$F_P = \frac{V_{strav}}{V_{acent}}$$

Nomenclature

V_{strav}	Average gas velocity caclulated after the Pitot tube traverse
V_{acent}	Average gas velocity at the center of the dilution tunnel cacluated after the multi-point Pitot traverse
F_P	Adjustment factor for center of tunnel pitot tube placement

Sample calculation

Data

V_{strav}	0,266425981
V_{acent}	0,27838677

Calculation

F_P	0,957035

Average dilution tunnel gas velocity (V_S)

Equation used

ASTM 2515, equation 9

$$V_S = F_p K_p C_p \left(\sqrt{\Delta P}\right)_{avg} \sqrt{\frac{T_S}{P_S M_S}}$$

Nomenclature

V_s	Average dilution tunnel gas velocity, m/s (ft/s)
K_p	Pitot tube constant For the metric units: $34.97\ m/sec \left[\frac{\left(\frac{g}{g\text{-}mole}\right)(mm\ Hg)}{(°K)(mm\ H_2O)}\right]^{1/2}$ For English units: $85.49\ ft/sec \left[\frac{\left(\frac{lb}{lb\text{-}mole}\right)(in\ Hg)}{(°R)(in\ H_2O)}\right]^{1/2}$
C_p	Pitot tube coefficient (use 0.99 for standard pitot tube, 0.84 may be used for S-type tubes constructed according to Method 2 specifications)
F_p	Pitot tube correction factor
$\left(\sqrt{\Delta P}\right)_{avg}$	Average square root of each individual velocity head (ΔP)
P_{bar}	Barometric pressure at measurement site, mm H_2O (in. H_2O)
P_g	Stack static pressure, mm Hg (in. Hg)
P_s	Absolute dilution tunnel static gas pressure, mm Hg (in. Hg), or $P_{bar} + P_g$
M_s	Molecular weight of dilution tunnel gas, wet basis, g/g-mole (lb/lb-mol) may be assumed to be 28.78 or 29 for CSA B415
t_s	Dilution tunnel temperature, °C (°F)
T_s	Absolute dilution tunnel temperature, °K (°R), or 273 + t_s for metric units, 460 + t_s for English units

Sample calculation

Data

K_p	85,49
C_p	0,99
F_p	0,957
$\left(\sqrt{\Delta P}\right)_{avg}$	0,2773 in $H_20^{1/2}$
P_{bar}	30,00 in Hg
P_g	0,28 in H_20
P_s	30,02 in Hg
M_s	29 lb/lb-mol
t_s	94,92 F
T_s	554,92 R

Calculation

V_s	17,9299 ft/s

Average dilution tunnel gas flow rate (Qstd)

Equation used

ASTM 2515, equation 3

$$Q_{std} = 60(1 - B_{WS})V_S A\left(\frac{T_{std}}{T_S}\right)\left(\frac{P_S}{P_{std}}\right)$$

Nomenclature

Q_{std}	Total gas flow rate corrected to dry standard conditions, dsm^3/min (dscf/min)
60	Conversion factor minutes per hour
B_{WS}	Water vapour in the dilution tunnel stream, proportion by volume (may be assumed to be 2%)
V_S	Average dilution tunnel gas velocity, m/s (ft/s)
A	Cross-sectional area of dilution tunnel, m^2 (ft^2)
T_{std}	Standard absolute temperature, 293 °K (528°R)
T_S	Absolute average dilution tunnel temperature, °K (°R), or 273 + t_S for metric units, 460 + t_S for English units
t_S	Dilution tunnel temperature, °C (°F)
P_S	Absolute dilution tunnel static gas pressure, mm Hg (in. Hg), or P_{bar} + P_g
P_{bar}	Barometric pressure at measurement site, mm Hg (in. Hg)
P_g	Dilution tunnel static pressure, mm Hg (in. Hg)
P_{std}	Standard absolute pressure, 760 mm Hg (29.92 in. Hg)

Sample calculation

Data

B_{WS}	0,02
V_S	17,930
A	0,349 ft^2
T_{std}	528 R
T_S	554,92 R
P_S	30,023 in Hg
P_{std}	29,92 in Hg

Calculation

Q_{std}	351,36 dscf/min

Particulate emission rate (E)

Equation used

$$E = (C_s - C_r)Q_{std}$$

Nomenclature

E	Particulate emission rate, g/hr
C_s	Concentration of particulate matter in stack gas or dilution tunnel gas, dry basis corrected to standard conditions, g/dscm^3 (g/dscf)
C_r	Concentration of particulate matter in room air, g/dscm^3 (g/dscf)
Q_{std}	Total gas flow rate, dry basis corrected to standard conditions, dsm^3/min (dscf/min)

Sample calculation

Data

C_s	0,000107 g/dscf
C_r	0,000004 g/dscf
Q_{std}	351,36 dscf/min

Calculation

E	0,04 g/min
E	2,16 g/h

Calculation based on train 2 data.

Total particulate emission rate (E_T)

Equation used

ASTM 2515, equation 15 $$E_T = (C_S - C_r)Q_{std}\theta$$

Nomenclature

E_T	Total particulate emission, g
C_S	Concentration of particulate matter in stack gas or dilution tunnel gas, dry basis corrected to standard conditions, g/dscm^3 (g/dscf)
C_r	Concentration of particulate matter in room air, g/dscm^3 (g/dscf)
Q_{std}	Total gas flow rate, dry basis corrected to standard conditions, dsm^3/min (dscf/min)
θ	Total sampling time, min

Sample calculation

Data

C_S	0,000107 g/dscf
C_r	0,000004 g/dscf
Q_{std}	351,36 dscf/min
θ	160 min

Calculation

E	5,77 g

Calculation based on train 2 data.

Average gas velocity in dilution tunnel during each min interval, i, of the test run

Equation used

ASTM 2515, equation 10

$$v_{si} = F_p K_p C_p \sqrt{\Delta p_i} \sqrt{\frac{T_{si}}{P_s M_s}}$$

Nomenclature

v_{si}	Average gas velocity in dilution tunnel during each min interval, i of the test run m/sec (ft/sec)
F_p	Pitot tube correction factor
K_p	Pitot tube constant For the metric units: $34.97\ m/sec \left[\frac{\left(\frac{g}{g\text{-}mole}\right)(mm\ Hg)}{(°K)(mm\ H_2O)}\right]^{1/2}$ For English units: $85.49\ ft/sec \left[\frac{\left(\frac{lb}{lb\text{-}mole}\right)(in\ Hg)}{(°R)(in\ H_2O)}\right]^{1/2}$
C_p	Pitot tube coefficient (use 0.99 for standard pitot tube, 0.84 may be used for S-type tubes constructed according to Method 2 specifications)
Δp_i	interval, i, of the test run
T_{si}	Absolute average gas temperature in the dilution tunnel during the ith minutes
P_s	Absolute dilution tunnel static gas pressure, mm Hg (in. Hg), or $P_{bar} + P_g$
M_s	Molecular weight of dilution tunnel gas, wet basis, g/g-mole (lb/lb-mol) may be assumed to be 28.78

Sample calculation

Data

i=1		i=2	
F_p	0,957	F_p	0,957
K_p	85,49	K_p	85,49
C_p	0,99	C_p	0,99
Δp_i	0,076 in H_2O	Δp_i	0,076 in H_2O
T_{si}	555,0 R	T_{si}	553,6 R
P_s	30,02 in Hg	P_s	30,02 in Hg
M_s	29 lb/lb-mol	M_s	29 lb/lb-mol

Calculation

i=1		i=2	
v_{si}	17,88 ft/sec	v_{si}	17,84 ft/sec

Percent of proportional sampling rate (PR)

Equation used

B415, equation 13.1

$$PR = \left(\frac{\theta V_{mi(std)} V_S T_m T_{Si}}{\theta_i V_m V_{Si} T_{mi} T_S} \right) \times 100$$

Nomenclature

PR	Percent of proportional sampling rate (%)
θ	Total sampling time, min
θ_i	Time of interval, 1 min
V_m	Volume of gas sample measured by the DGM, dsm^3 (dscf)
$V_{mi(std)}$	Volume of gas sample measured by the digital mass flow controller during the ith 1 minutes interval, dsm^3 (dscf)
V_S	Average gas velocity in the dilution tunnel, ft/min
V_{Si}	Average gas velocity in the dilution tunnel during the ith 10 minutes interval, ft/min
T_m	Absolute average digital mass flow controller temperature, K (R)
T_{mi}	Absolute average digital mass flow controller temperature during the ith 1 minutes
T_S	Absolute average gas temperature in the dilution tunnel, K (R)
T_{Si}	Absolute average gas temperature in the dilution tunnel during the ith 1 minutes

Sample calculation

Data

train =1			train =2		
θ	160	min	θ	160	min
θ_i	1	min	θ_i	1	min
V_m	27,24	dcf	V_m	28,93	dcf
$V_{mi(std)}$	0,175	cuft	$V_{mi(std)}$	0,1842	cuft
V_S	17,94	ft/sec	V_S	17,94	ft/sec
V_{Si}	17,894	ft/sec	V_{Si}	17,894	ft/sec
T_m	536,1	R	T_m	538,0	R
T_{mi}	533,09	R	T_{mi}	532,93	R
T_S	554,92	R	T_S	554,92	R
T_{Si}	555,0	R	T_{Si}	555,0	R

Calculation

train=1		**train=2**	
PR	103,7 %	PR	103,1 %

Filter face velocity check

Equation used

$$FV_{max} = \frac{V_{mL}}{1} \times \frac{1}{F_A}$$

Nomenclature

FV_{max}	Maximum filter face velocity during the test run, m/min (ft/min)
V_{mL}	Largest 1 minute interval metered gas volume value recorded during the test run, dm^3 (dcf)
F_A	Filter area exposed to gas sample during train operation, m2 (ft^2)

Sample calculation

Data

V_{mL}	0,182 dcf
F_A	0,0116 ft^2

Calculation

FV_{max}	15,71 ft/min

Dual train precision

Equation used

$$\frac{Train\ 1 - average\ train\ 1\ and\ train\ 2}{average\ train\ 1\ and\ train\ 2} \times 100 \leq 7.5\%$$

Nomenclature

Dual train precision	Deviation between emission's train 1 and 2
Train 1	Total emission for train 1
Train 2	Total emission for train 2

Sample calculation

Data

Train 1	5,73 g
Train 2	5,77 g

Calculation

Dual train precision	0,34 %

Analyzer drift checks

Equation used

$$Drift = \frac{\Delta R}{span} \times 100$$

Nomenclature

Drift	The change in analyzer response to calibration gas over the duration of the test run
ΔR	The difference between the analyzer response at the end of the test run and the
Span	The upper limit of the instrument range, ppmv or %

Sample calculation

Data

ΔR	0,015 %
Span	5 %

Calculation

Drift	0,30 %

Calculated with CO concentration values.

APPENDIX 12: Volume calculations

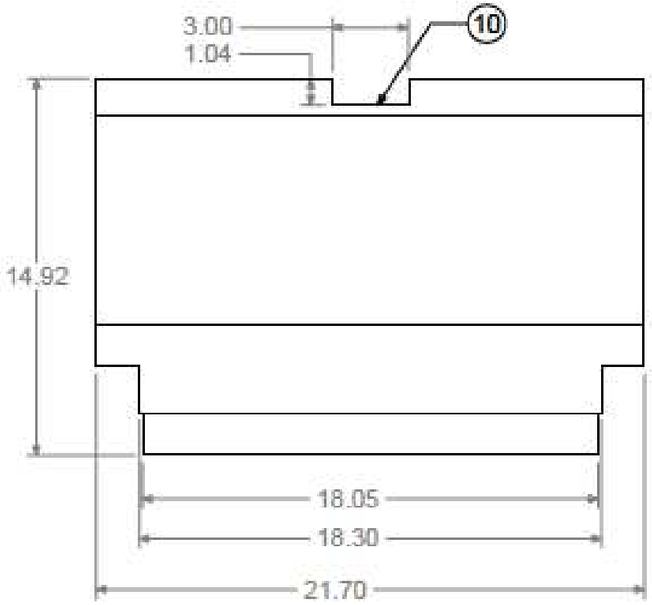

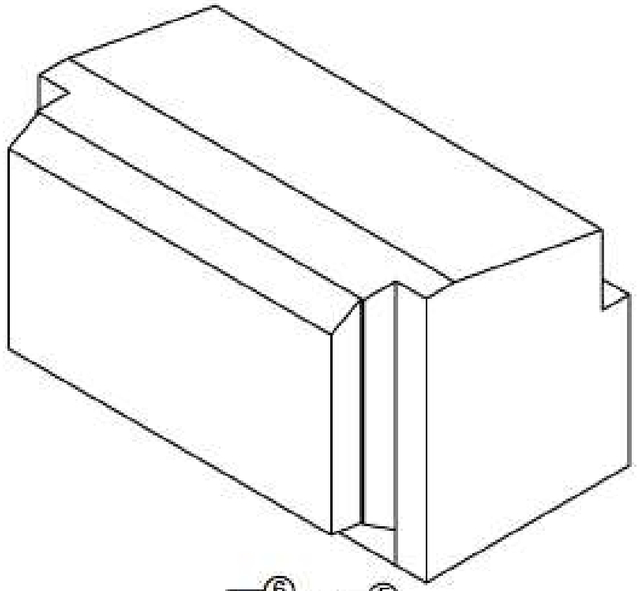

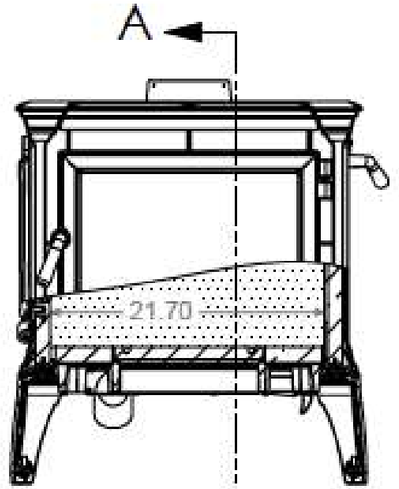

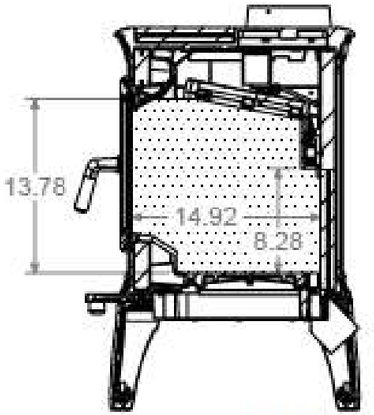

SECTION A-A
SCALE 1 : 12

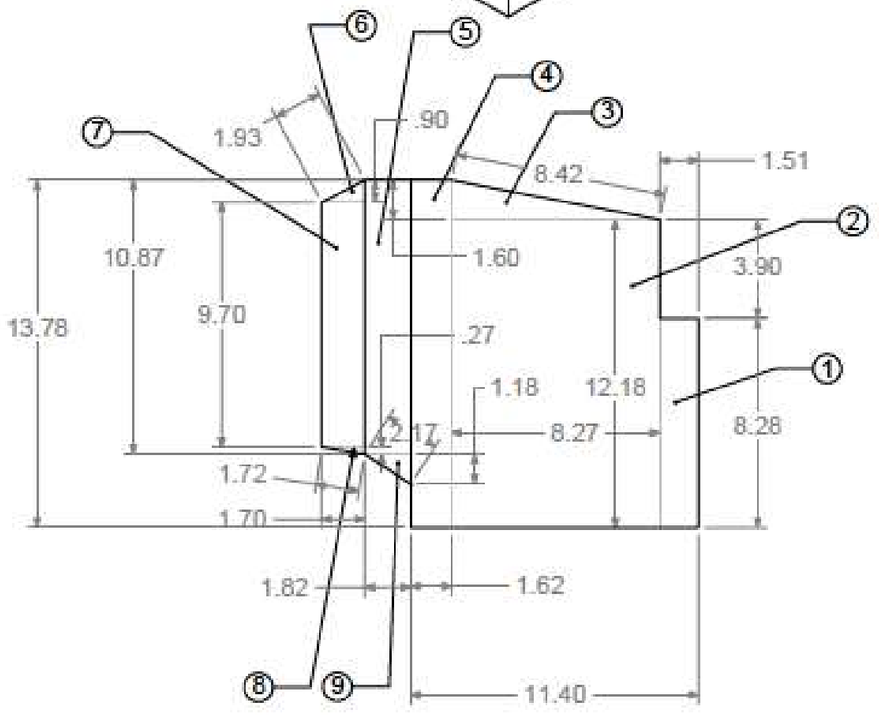

ZONE	SIZE	VOLUME (CU. IN)
1	8.28X1.51X21.70	271.31
2	8.27X12.18X21.70	2185.81
3	8.42X1.60X8.27X21.70	143.57
4	13.78X1.62X21.70	484.42
5	10.87X1.82X18.30	362.04
6	.90X1.93X1.70X18.05	13.81
7	9.70X1.70X18.05	297.64
8	1.72X1.70X.27X18.05	4.14
9	2.17X1.18X1.82X18.30	19.65
10	3.00X1.04X8.28	-25.83
TOTAL		3756.56
X/1728	CUBIC FEET	2.17

TOTAL FIREBOX VOLUME IS SAME AS USABLE VOLUME

REVISIONS				
ECO	REV.	DESCRIPTION	DATE	APPROVED

VIEWS ARE THIRD ANGLE

This document submitted by Hearthstone is the property of Hearthstone and may contain information of a proprietary nature and shall not be copied or duplicated in whole or in part or used in whole or in part for any purpose other than that which is necessary for the preparation of bids or fabrication. Please return to Hearthstone.

UNLESS OTHERWISE SPECIFIED:
TOLERANCES ARE:
FRACTIONS ± 1/64 DECIMALS .XX± .015 .XXX± .005 ANGLES ± 1/4°
1.) DIMENSIONS ARE IN INCHES / MM
2.) ALL MACHINED SURFACES TO BE DE-BURRED AND SMOOTHED
MATERIAL: N/A
FINISH: Finish

CAD GENERATED DRAWING, DO NOT MANUALLY UPDATE

APPROVALS	DATE
DRAWN SPB	3/12/2018
CHECKED	
ENG APPR.	
MFG APPR.	
QUAL APPR.	

hearthstone

HERITAGE 8024

FIREBOX USABLE VOLUME

SIZE B | HEARTHSTONE DWG. NO. 8024_FIREBOX_VOLUME_BASIC | REV. D

SCALE 1:8 | WEIGHT: | DWG. NO. | SHEET 1 OF 1

sboothFriday, September 15, 2023 1:03:05 PM

sboothM:\Drawings\STOVES\Heritage 8024\

APPENDIX 13: Operating instruction

hearthstone

MODEL: 8024
DATE: 9/14/2023
TEST ENGINEER: WGE

8024 HERITAGE RECERT

WOOD STOVE OPERATING INSTRUCTIONS

BURN RATE CATEGORY	KINDLING	WARM UP AND PREBURN	PREBURN START	AIR SETTINGS	TEST FAN SETTING	COAL BED PREP	TEST LOAD	START OF TEST
LOW (1)	5.0 LBS, DOOR PART OPEN UNTIL FULLY INVOLVED	SEE FIGURE 1 FOR SIZES AND WEIGHT RANGE, KEEP DOOR OPEN UNTIL FULLY INVOLVED, BURN TO PREBURN START WEIGHT	3 LBS ABOVE COAL BED RANGE, CLOSE BYPASS, SET PRIMARY AIR TO TEST SETTING	WARMUP SET AIR TO FULL OPEN, AT PREBURN START SET AIR TO LOWEST POSSIBLE SETTING*	WARMUP: OFF PREBURN: ON (LOW) FIRST 30 MIN OF TEST: OFF TEST: ON (LOW)	2 MIN BEFORE START OF TEST BREAK UP COALS TO APPX 2" - 3", MAKE EVEN DENSITY AND HIGHT, KEEP LPAD CLEAR OF COALS	SEE FIGURE 3 FOR SIZE AND NUMBER OF PIECES 14.3 LBS IDEAL (SET FRONT STACK TIGHTLY TO CAST SILL AND PUSH ALL DOWN INTO COAL BED)	OPEN BYPASS AND PRIMARY, INSERT WOOD PRESSING SPACERS INTO COAL BED, CLOSE LOAD DOOR AND BYPASS, @ 5 MIN SET PRIMARY TO LOW, KEEP LPAD CLEAR OF COALS IN FRONT OF TEST LOAD
MEDIUM-LOW (2)	5.0 LBS, DOOR PART OPEN UNTIL FULLY INVOLVED	SEE FIGURE 1 FOR SIZES AND WEIGHT RANGE, KEEP DOOR OPEN UNTIL FULLY INVOLVED, BURN TO PREBURN START WEIGHT	3.2 LBS ABOVE COAL BED RANGE, CLOSE BYPASS, SET PRIMARY AIR TO TEST SETTING	WARMUP SET AIR TO FULL OPEN, AT PREBURN START SET AIR TO 3/8" (9.5MM) SEE FIG 3	WARMUP: OFF PREBURN: ON (LOW) FIRST 30 MIN OF TEST: OFF TEST: ON (LOW)	2 MIN BEFORE START OF TEST BREAK UP COALS TO APPX 2" - 3", MAKE EVEN DENSITY AND HIGHT, KEEP LPAD CLEAR OF COALS	SEE FIGURE 3 FOR SIZE AND NUMBER OF PIECES 14.3 LBS IDEAL (SET FRONT STACK TIGHTLY TO CAST SILL AND PUSH ALL DOWN INTO COAL BED)	OPEN BYPASS AND PRIMARY, INSERT WOOD PRESSING SPACERS INTO COAL BED, CLOSE LOAD DOOR AND BYPASS AND @ 5 MIN SET PRIMARY TO 3/8", KEEP LPAD CLEAR OF COALS IN FRONT OF TEST LOAD
MED HIGH (3)	5.0 LBS, DOOR PART OPEN UNTIL FULLY INVOLVED	SEE FIGURE 1 FOR SIZES AND WEIGHT RANGE, KEEP DOOR OPEN UNTIL FULLY INVOLVED, BURN TO PREBURN START WEIGHT	4.0 LBS ABOVE COAL BED RANGE, CLOSE BYPASS, SET PRIMARY AIR TO TEST SETTING	WARMUP SET AIR TO FULL OPEN, AT PREBURN START SET AIR TO 5/8" (15.9MM) SEE FIG 3	WARMUP: OFF PREBURN: ON (LOW) FIRST 30 MIN OF TEST: OFF TEST: ON (LOW)	2 MIN BEFORE START OF TEST BREAK UP COALS TO APPX 2" - 3", MAKE EVEN DENSITY AND HIGHT, KEEP LPAD CLEAR OF COALS	SEE FIGURE 3 FOR SIZE AND NUMBER OF PIECES 14.3 LBS IDEAL (SET FRONT STACK TIGHTLY TO CAST SILL AND PUSH ALL DOWN INTO COAL BED)	OPEN BYPASS AND PRIMARY, INSERT WOOD PRESSING SPACERS INTO COAL BED, CLOSE LOAD DOOR. CLOSE BYPASS @ 5 MIN SET PRIMARY TO 5/8", KEEP LPAD CLEAR OF COALS IN FRONT OF TEST LOAD
HIGH (4)	5.0 LBS, DOOR PART OPEN UNTIL FULLY INVOLVED	SEE FIGURE 1 FOR SIZES AND WEIGHT RANGE, KEEP DOOR OPEN UNTIL FULLY INVOLVED	CLOSE BYPASS	WARMUP SET AIR TO FULL OPEN, AT PREBURN START SET AIR TO FULL OPEN	WARMUP: OFF PREBURN: ON (HIGH) FIRST 30 MIN OF TEST: OFF TEST: ON (HIGH)	2 MIN BEFORE START OF TEST BREAK UP COALS TO APPX 2" - 3", MAKE EVEN DENSITY AND HIGHT, KEEP LPAD CLEAR OF COALS	SEE FIGURE 3 FOR SIZE AND NUMBER OF PIECES 14.3 LBS IDEAL (SET FRONT STACK TIGHTLY TO CAST SILL AND PUSH ALL DOWN INTO COAL BED)	OPEN BYPASS AND PRIMARY, INSERT WOOD PRESSING SPACERS INTO COAL BED, CLOSE LOAD DOOR. CLOSE BYPASS AND SET PRIMARY TO FULL OPEN, KEEP LPAD CLEAR OF COALS IN FRONT OF TEST LOAD

FIGURE 1: WARMUP/PREBURN LOAD CONFIGURATION

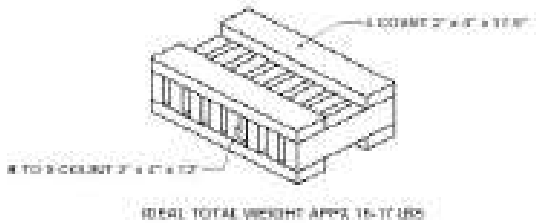

IDEAL TOTAL WEIGHT APPX 15-17 LBS

FIGURE 2: TEST LOAD CONFIGURATION

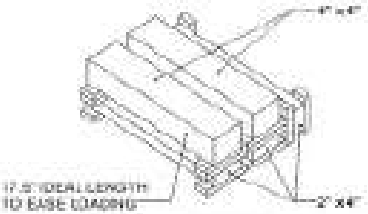

MIN 13.78 LBS - MAX 16.8 LBS
MIN 6' 0" - MAX 18 6"

FIGURE 3: AIR SETTING LOCATION



APPENDIX 14: Drawing Air flow pattern

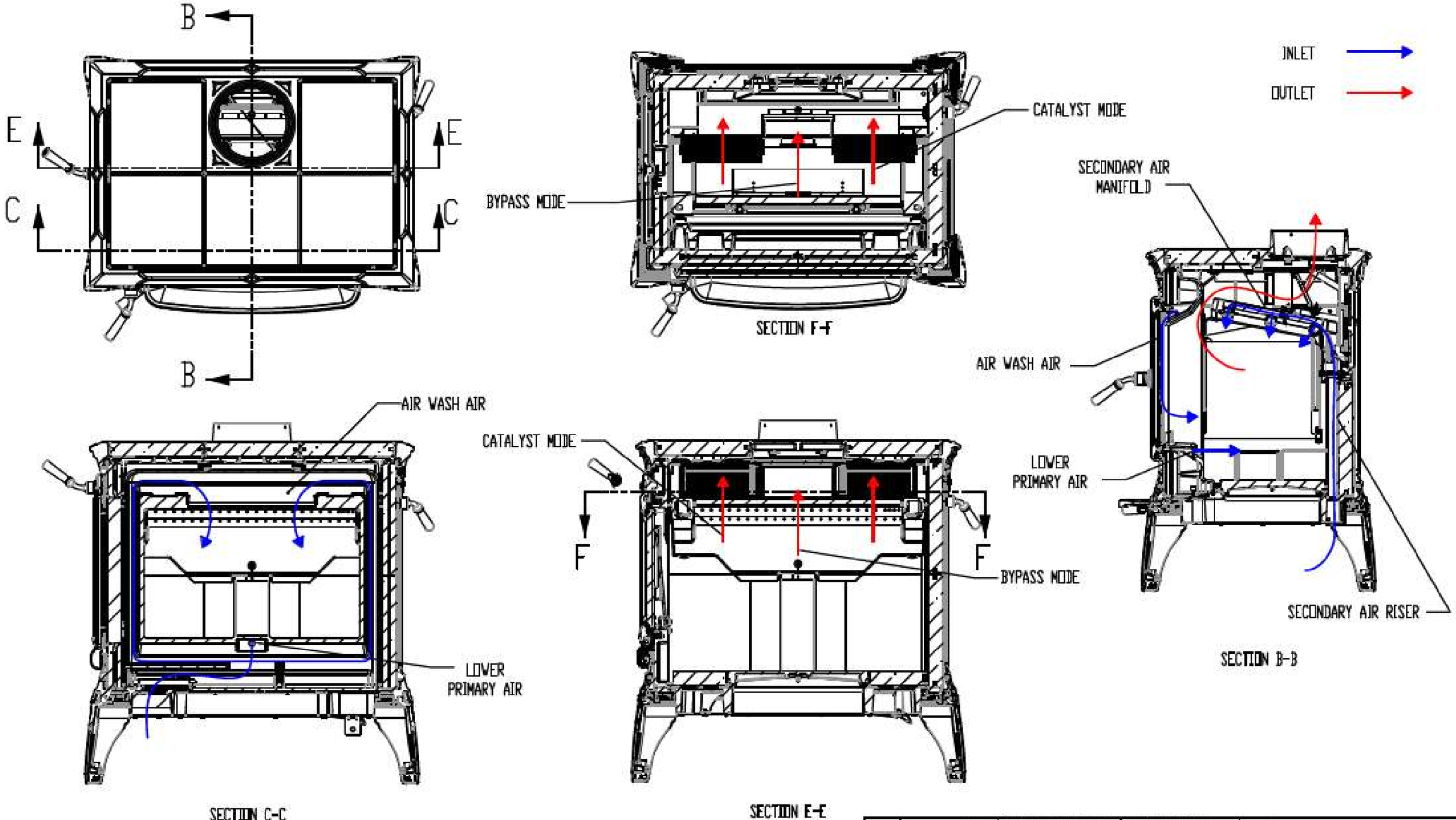

WEIGHT: 65617915

REVISIONS				
BID	REV.	DESCRIPTION	DATE	APPROVED

VIEWS ARE THIRD ANGLE

This document submitted by HearthStone is the property of HearthStone and may contain information of a proprietary nature and shall not be copied or duplicated in whole or in part or used in whole or in part for any purpose other than that which necessary for the preparation of bids or fabrication. Please return to HearthStone.

UNLESS OTHERWISE SPECIFIED
TOLERANCES ARE:
FRACTIONS ± 1/64 DECIMALS .XX ±.015 ANGLES ± 1/4°
.XXX ± .005
1) DIMENSIONS ARE IN INCHES / MM
2) ALL MACHINED SURFACES TO BE DE-BURRED AND SMOOTHED
MATERIAL:
FINISH:

CAD GENERATED DRAWING, DO NOT MANUALLY UPDATE

APPROVALS	DATE
DRAWN CFM	03/08/2018
CHECKED	
DESIGN ENG	
MFG ENG	
QUAL ENG	

hearthstone

HERITAGE 8024

8024 EPA AIRFLOW DIAGRAM

SIZE D | HEARTHSTONE DWG. NO. 8024 EPA AIRFLOW | REV. 0

SCALE .XX | DESIGN DWG. NO. | SHEET 0 OF 1

APPENDIX 15: Notice, CoC, WHA, others

U.S. ENVIRONMENTAL PROTECTION AGENCY (EPA)
30-DAY NOTIFICATION FORM
PURSUANT TO 40 CFR PART 60 SUBPARTS AAA AND QQQQ
2015 STANDARDS OF PERFORMANCE FOR NEW RESIDENTIAL WOOD HEATERS, NEW RESIDENTIAL HYDRONIC HEATERS AND FORCED-AIR FURNACES

Disclaimer: The statutory provisions and the EPA regulations described in this document contain legally binding requirements. This document is not a substitute for those provisions or regulations, nor is it a regulation itself. In the event of a discrepancy, please refer to 40 CFR PART 60 Subparts AAA AND QQQQ, Sections 60.533 and 60.5475. This document may be revised periodically without public notice. If you have additional questions, please contact Rafael Sanchez at 202-564-7028 or via email at sanchez.rafael@epa.gov.

- **The manufacturer of an affected wood/pellet heater/central heater model line must notify the Administrator of the date that certification testing is scheduled to begin by email to WoodHeaterReports@epa.gov.**
- **This notice must be received by the EPA at least 30 days before the start of testing.**

GENERAL INFORMATION						
Manufacturer's Name: Hearthstone QHP						
Appliance Type (Circle One):	☒ Adjustable Burn Rate Wood Heater	☐ Pellet Stove	☐ Single Burn Rate Heater	☐ Hydronic Heater	☐ Forced Air Furnace	☐ Other:
Hydronic Heater Type (Circle One):	☐ Traditional	☐ Full Storage	☐ Partial Storage	☐ Indoor/Outdoor	☐ Other:	
Forced-Air Furnace Type (Circle One):	☐ Small (less than 65,000 BTU/hr heat output)		☐ Large (greater than 65,000 BTU/hr heat output)		☐ Other:	
Fuel Type:	☒ Crib	☐ Pellet	☐ Cordwood	☐ Other:		
Model Name and Number: Heritage 8024						
Catalyst: ☒ **Yes** ☐ **No**						
Mailing Address: 317 Stafford Ave						
Street Address: 317 Stafford Ave						
City: Morrisville	**State:** VT	**ZIP Code:** 05661				
Phone: 802 851 4044	**Fax:** N/A	**Web Site:** www.hearthstonestoves.com				
Address of Manufacturing Facility: 317 Stafford Ave						
City: Morrisville	**State:** VT	**ZIP Code:** 05661				
EPA APPROVED TEST LABORATORY						
Name and Title of Authorized Representative: Danick Power						
Company: Services Polytests Inc.						

U.S. ENVIRONMENTAL PROTECTION AGENCY (EPA)
30-DAY NOTIFICATION FORM
PURSUANT TO 40 CFR PART 60 SUBPARTS AAA AND QQQQ
2015 STANDARDS OF PERFORMANCE FOR NEW RESIDENTIAL WOOD HEATERS, NEW RESIDENTIAL HYDRONIC HEATERS AND FORCED-AIR FURNACES

Disclaimer: The statutory provisions and the EPA regulations described in this document contain legally binding requirements. This document is not a substitute for those provisions or regulations, nor is it a regulation itself. In the event of a discrepancy, please refer to 40 CFR PART 60 Subparts AAA AND QQQQ, Sections 60.533 and 60.5475. This document may be revised periodically without public notice. If you have additional questions, please contact Rafael Sanchez at 202-564-7028 or via email at sanchez.rafael@epa.gov.

- **The manufacturer of an affected wood/pellet heater/central heater model line must notify the Administrator of the date that certification testing is scheduled to begin by email to WoodHeaterReports@epa.gov.**
- **This notice must be received by the EPA at least 30 days before the start of testing.**

Phone: 450 741-3636	**E-mail: Dpower@polytests.com**	**Fax: NA**
City: St-Jean-sur-richelieu	**State: Canada, Quebec**	**ZIP Code: J3B 7S7**
EPA APPROVED THIRD-PARTY CERTIFIER		
Name and Title of Authorized Representative: John Steinert, General Manager, Portland Laboratory		
Company: PFS-TECO, Inc.		
Phone: 580 650 0088	**E-mail:** john.steinert@pfsteco.com	**Fax:** N/A
City: Clackamas	**State:** OR	**ZIP Code:** 97015
COMPLIANCE TEST INFORMATION		
Test Method(s): EPA Method 28R, ASTM E2515-11, ASTM E2780, CSA B415.1-10 **and CATALYST EQUIVALENCY TESTING**		
Date(s) of Proposed Test: Performance testing scheduled for October 2nd through October 9th 2023, Extended catalyst equivalency testing scheduled to take place after October 9th, 2023.		
Testing Location: Polytests Services Inc. 695 B rue Gaudette, St-Jean-sur-Richelieu Québec, Canada, J3B 7S7 *450.741.3636*		

U.S. ENVIRONMENTAL PROTECTION AGENCY (EPA)
30-DAY NOTIFICATION FORM
PURSUANT TO 40 CFR PART 60 SUBPARTS AAA AND QQQQ
2015 STANDARDS OF PERFORMANCE FOR NEW RESIDENTIAL WOOD HEATERS, NEW RESIDENTIAL HYDRONIC HEATERS AND FORCED-AIR FURNACES

Disclaimer: The statutory provisions and the EPA regulations described in this document contain legally binding requirements. This document is not a substitute for those provisions or regulations, nor is it a regulation itself. In the event of a discrepancy, please refer to 40 CFR PART 60 Subparts AAA AND QQQQ, Sections 60.533 and 60.5475. This document may be revised periodically without public notice. If you have additional questions, please contact Rafael Sanchez at 202-564-7028 or via email at sanchez.rafael@epa.gov.

- **The manufacturer of an affected wood/pellet heater/central heater model line must notify the Administrator of the date that certification testing is scheduled to begin by email to WoodHeaterReports@epa.gov.**
- **This notice must be received by the EPA at least 30 days before the start of testing.**

Simon Booth, Engineering Lab Manager
Print Name and Title of Authorized Official

Simon Booth
Signature

8/2/23
Date

Remarks:

The Heritage 8024 is a "Hybrid"-type appliance, incorporating both a secondary combustion system and a catalyst, and should be listed as such.

Testing will also be completed in the same sequence seeking to approve an alternative catalyst.

v1

UNITED STATES ENVIRONMENTAL PROTECTION AGENCY
WASHINGTON, DC 20460

OFFICE OF
COMPLIANCE

DEC 15 2016

Chris Neufeld
Vice President
Blaze King Industries, Inc.
146 A Street
Walla Walla, Washington 99362

RE: Blaze King Industries, Inc. (Blaze King) Request for Catalyst Suitable Replacement Procedures

Dear Mr. Neufeld:

This letter is in response to the February 3, 2016, Blaze King letter requesting the United States Environmental Protection Agency (EPA) implement a program to allow catalyst equipped wood heater manufacturers and suppliers to seek suitable replacement status during the life cycle of the product. As discussed below, replacement catalysts may be used if equivalency is properly demonstrated.

To have a catalyst deemed suitable for replacement, equivalency testing must be conducted by an EPA-approved test laboratory. Consistent with the 2015 Standards of Performance for New Residential Wood Heaters, New Residential Hydronic Heaters and Forced-Air Furnaces (Subpart AAA) (2015 Standards), the manufacturer must notify the EPA of the date that certification testing (catalyst equivalency testing) is scheduled to begin as stated in Section 60.534(g). This notice must be received by the EPA at least 30 days before the start of testing. EPA will consider the following steps to be adequate to demonstrate replacement catalyst equivalency:

1) The manufacturer uses the same test method as the original certification test was conducted. If the original certification test method is no longer valid, the manufacturer requests an alternative test method prior to testing.

2) The replacement catalyst is aged 50 hours prior to catalytic equivalency testing. The catalyst is tested in the same model or model line unit in which the original catalyst was tested.

3) Both a Category 1 run and Category 4 run are conducted by an EPA-approved test laboratory.

4) The new Category 1 run is compared to the original Category 1 run, and the new Category 4 run is compared to the original Category 4 run. The new runs are not more than 0.5 grams/hour greater than the original certification test results for each run. They are compared separately, with no averaging. In equation form:

Replacement catalyst category 1 ≤ (original catalyst category 1 + 0.5g/hr)

AND

Replacement catalyst category 4 ≤ (original catalyst category 4 + 0.5g/hr)

As noted in Section 60.533(k)(4)[1], the EPA Administrator must approve the change in the catalyst in advance, with proper documentation of the equivalency testing. This documentation consists of the original certification test report category 1 and 4 data and the new category 1 and 4 test data results. All demonstration test data must be sent to WoodHeaterReports@epa.gov within 60 days after the date of completing the test. EPA considers the catalyst equivalency testing to be a form of certification testing governed by the provisions in Section 60.534.

The EPA finds the request outside the scope of an applicability determination. The term "applicability determination" is limited to the Agency's formal decisions, issued in response to a non-hypothetical and site-specific request about the applicability of a specific rule to a specific facility. Therefore, the EPA considers this response to be a regulatory interpretation to a source request for clarification.[2]

This response has been prepared in consultation with the Office of Air Quality, Planning, and Standards, and the Office of General Counsel. If you have any questions, please contact Rafael Sanchez of my staff at 202-564-7028 or email at sanchez.rafael@epa.gov.

Sincerely,

Edward J. Messina, Director
Monitoring, Assistance, and Media Programs Division
Office of Compliance

[1] A change in the make, model or composition of a catalyst is presumed to affect particulate matter and carbon monoxide emissions and efficiency, unless the change has been requested by the heater manufacturer and has been approved in advance by the Administrator, based on test data that demonstrate that the replacement catalyst is equivalent to or better than the original catalyst in terms of particulate matter emission reduction.
[2] This regulatory interpretation updates EPA Applicability Determination WDS-138 (July 6, 1990).

cc: Amanda Aldridge, OAQPS
Adam Baumgart-Getz, OAQPS
Mike Toney, OAQPS
Scott Jordan, OGC
Sara Ayres, OC

Appendix C
Firebox Volume

Kuma K 250 series

0123WM012E. REV001

6/9/2020
B Davis
O-TL

H	W	D	
11.0	19.25	20.75 ~	2.54 ft^3

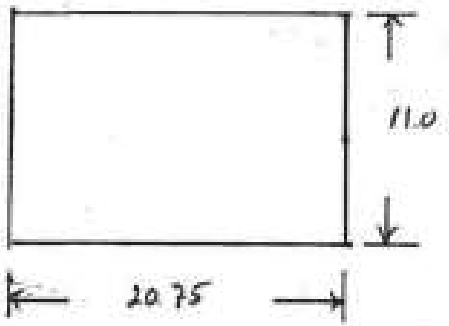

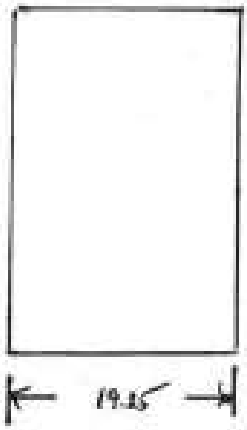

hearthstone

August 2, 2023

Rafael Sanchez, Ph.D.
Wood Heater Program Lead
Air Branch
Monitoring, Assistance, and Media Programs Division
Office of Compliance
U.S. Environmental Protection Agency (EPA)
Room 7149-D
1200 Pennsylvania Ave., NW
MS: 2227A
Washington, DC 20004

RE: Alternative Catalyst Request

Dear Dr. Sanchez,

To accompany our 5-year recertification testing of our freestanding wood stove, known as the Heritage 8024, Hearthstone Stoves is also notifying of our intent to test and submit additional data to demonstrate that an alternative catalyst has an equivalent functionality. Based on the results of this forthcoming data Hearthstone requests the approval of the alternative catalyst at the time of 5-year recertification, Hearthstone Part Number 3050-020/Vendor part number WF-415000106, for use in the production of the Heritage 8024.

Hearthstone Quality Home Heating Products affirms that the use of the alternative catalyst in the Heritage 8024 will meet all the requirements for certification set forth in 40 CFR Part 60, Section 60.533(e). No additional changes will be made to the stove as a result of this alternative catalyst, and all K list items will remain as reported in the original certification.

Sincerely,

Simon Booth
Engineering Manager, Hearthstone Quality Home Heating Products

U.S. ENVIRONMENTAL PROTECTION AGENCY (EPA)
2015 Standards of Performance for New Residential Wood Heaters, New Residential Hydronic Heaters and Forced-Air Furnaces Application
40 CFR PART 60 SUBPARTS AAA AND QQQQ

Disclaimer: The statutory provisions and the EPA regulations described in this document contain legally binding requirements. This document is not a substitute for those provisions or regulations, nor is it a regulation itself. In the event of a discrepancy, please refer to 40 CFR PART 60 Subparts AAA AND QQQQ, Sections 60.533(b), 60.5475(b), and Appendix A–8. This document may be revised periodically without public notice. If you have additional questions, please contact Rafael Sanchez at 202-564-7028 or via email at sanchez.rafael@epa.gov.

Contents

Application for US EPA certification 2

Wood Burning Heaters 7

I. Test Method 28R for Certification and Auditing of Wood Heaters 7

A. *Summary Results – Adjustable Wood Burning Heaters* 7

B. *Summary Results – Single Burn Rate Wood Burning Heaters* ..... **Error! Bookmark not defined.**

C. *Summary Results – Pellet Heaters* ..... **Error! Bookmark not defined.**

Hydronic Heaters ..... **Error! Bookmark not defined.**

II. Test Method 28WHH for Measurement of Particulate Emissions and Heating Efficiency of Wood-Fired Hydronic Heating Appliances **Error! Bookmark not defined.**

Table 1A. Data Summary Part A ..... **Error! Bookmark not defined.**

..... **Error! Bookmark not defined.**

Table 1B. Data Summary Part B ..... **Error! Bookmark not defined.**

Table 1C: Additional (Hangtag) Information ..... **Error! Bookmark not defined.**

Table 2. Annual Weighting ..... **Error! Bookmark not defined.**

III. Test Method 28WHH for Certification of Cord Wood-Fired Hydronic Heating Appliances With Partial Thermal Storage ..... **Error! Bookmark not defined.**

Table 2A. Data Summary Part A ..... **Error! Bookmark not defined.**

Table 2B. Data Summary Part B ..... **Error! Bookmark not defined.**

Table 3C. Data Summary Part D ..... **Error! Bookmark not defined.**

Forced-Air Furnaces ..... **Error! Bookmark not defined.**

IV. Forced-Air Furnaces ..... **Error! Bookmark not defined.**

APPLICATION FOR A CERTIFICATE OF COMPLIANCE PURSUANT TO 40 CFR PART 60 SUBPARTS AAA AND QQQQ

2015 STANDARDS OF PERFORMANCE FOR NEW RESIDENTIAL WOOD HEATERS, NEW RESIDENTIAL HYDRONIC HEATERS AND FORCED-AIR FURNACES

GENERAL INFORMATION

Manufacturer's Name: HEARTHSTONE QUALITY HOME HEATING PRODUCTS

Heater Type (Circle One):	Adjustable Burn Rate Wood Heater	Pellet Stove	Single Burn Rate Heater	Hydronic Heater	Forced Air Furnace	Other:
Hydronic Heater Type (Circle One):	Traditional	Full Storage	Partial Storage	Indoor/Outdoor	Other:	
Forced-Air Furnace Type (Circle One):	Small (less than 65,000 BTU/hr heat output)		Large (greater than 65,000 BTU/hr heat output)		Other:	
Fuel Tested:	Crib	Pellet	Cordwood	Wood Chips	Other:	

Test Method(s) Method 28R	**Catalyst: Yes**

Model Name and Design Number (The model name and design number must clearly distinguish one model from another. The name and design number cannot include the EPA symbol or logo or name or derivatives such as "EPA): Heritage 8024

Physical Address (Street number and Address, not P.O. Box): 317 Stafford Ave	**Mailing Address: 317 Stafford Ave**

City: Morrisville	**State: Vt**	**ZIP Code:05661**
Phone: 1-802-851-4044	**Email: warm@hearthstonestoves.com**	**Website: www.hearthstonestoves.com**

EPA Submission Date of 30 day Notice: 8/2/2023

MANUFACTURER'S AUTHORIZED REPRESENTATIVE INFORMATION

Name: Simon Booth

Position/Title: Engineering Manager

Address: 317 Stafford Ave

City: Morrisville	**State: vt**	**ZIP Code: 05661**
Phone: 802-851-4044	**E-mail: sbooth@hearthstonestoves.com**	**Website: www.hearthstonestoves.com**

Remarks:

EPA-APPROVED TEST LABORATORY

APPLICATION FOR A CERTIFICATE OF COMPLIANCE PURSUANT TO 40 CFR PART 60 SUBPARTS AAA AND QQQQ

2015 STANDARDS OF PERFORMANCE FOR NEW RESIDENTIAL WOOD HEATERS, NEW RESIDENTIAL HYDRONIC HEATERS AND FORCED-AIR FURNACES

Name of Test Laboratory: Polytests Services inc.		
Name of Person Authorized or Responsible for Conducting Compliance Test: Danick Power		
Position/Title: VP operation		
Address: 695-B Gaudette,		
City: St-Jean-sur-Richelieu	**State:** Quebec, Canada	**ZIP Code:** J3B 7S7
Phone: 450 741-3636	**Email:** dpower@polytests.com	**Website:** www.polytests.com
Remarks:		
EPA-Approved Third Party Certifier		
Name of Certifier Entity: PFS Teco		
Name of Person Authorized or Responsible for Reviewing Test Report and/or Issuing Certification of Conformity: John Steinert		
Position/Title: Laboratory Manager		
Address: 11785 Highway 212 ste. 305		
City: Clackasmas	**State:** OR	**ZIP Code:** 97015
Phone: 503-650-0088	**Email:** john.steinert@pfsteco.com	**Website:** www.pfsteco.com
Remarks:		

COMPLIANCE STATEMENTS AND ACKNOWLEDGEMENTS – SECTIONS 60.533(B) AND 60.5475(B)

INSTRUCTIONS: PLEASE READ THE BELOW STATEMENTS AND AFFIRMATIONS AND ADDRESS ACCORDINGLY.

FOR EMISSIONS DATA SUMMARY TABLES SEE ATTACHMENTS

1. **Engineering Drawings Statement**

Engineering drawings and specifications of components that may affect emissions (including specifications for each component listed in paragraphs (k)(2), (3) and (4) of 60.533(b) and 60.5475(b). Manufacturers may use assembly or design drawings that have been prepared for other purposes, but must designate on the drawings the dimensions of each component listed in paragraph (k) of this section. Manufacturers must identify tolerances of components listed in paragraph (k)(2) of 60.533(b) and 60.5475(b) that are different from those specified in that paragraph, and show that such tolerances cannot reasonably be anticipated to cause wood heaters in the model line to exceed the applicable emission limits. The drawings must identify how the emission-critical parts, such as air tubes and catalyst, can be readily inspected and replaced.

Engineering drawings and specifications of components that may affect emissions are included with the CBI certification report. Dimensions and tolerances are in line with 60.533 (b), and our quality assurance plan and quality inspection sheets ensure on-going quality and conformance. Replacement instructions for emission-critical components are included in our operator's manual.

2. **Firebox Statement Requirement**

A statement whether the firebox or any firebox component (including the materials listed in paragraph (k)(3) of 60.533(b) and 60.5475(b) will be composed of material different from the material used for the firebox or firebox component in the wood heater on which certification testing was performed, a description of any such differences and demonstration that any such differences may not reasonably be anticipated to adversely affect emissions or efficiency.

All K-list items as described in 60.533 (b) on the certification test unit will be similar in all material respects to the production units.

3. **CBI**

Clear identification of any claimed confidential business information (CBI). Submit such information under separate cover to the EPA CBI Office; Attn: Residential Wood Heater Compliance Program Lead, 1200 Pennsylvania Ave., NW, Room 7138, MS:2227A, Washington, DC 20460. **Note that all emissions data, including all information necessary to determine emission rates in the format of the standard, cannot be claimed as CBI.**

A CBI and Non-CBI report will be provided separately.

4. **Valid Certification Statement**

All documentation pertaining to a valid certification test, including the complete test report and, for all test runs: Raw data sheets, laboratory technician notes, calculations and test results. Documentation must include the items specified in the applicable test methods. Documentation must include discussion of each test run and its appropriateness and validity, and must include detailed discussion of all anomalies, whether all burn rate categories were achieved, any data not used in the calculations and, for any test runs not completed, the data collected during the test run and the reason(s) that the test run was not completed and why. The burn rate for the low burn rate category must be no greater than the rate that an operator can achieve in home use and no greater than is advertised by the manufacturer or retailer. The test report must include a summary table that clearly presents the individual and overall emission rates, efficiencies and heat outputs. Submit the test report and all associated required information, according to the procedures for electronic reporting specified in § 60.537(f) and 60.5475(f).

A valid certification test report with all required documentation as specified above has been submitted by Polytests

5. **Warranties**

A copy of the warranties for the model line, which must include a statement that the warranties are void if the unit is used to burn materials for which the unit is not certified by the EPA and void if not operated according to the owner's manual.

The warranty is detailed in the Operator's manual, which is provided with Polytest's report

6. Q/A Statement

A statement that the manufacturer will conduct a quality assurance program for the model line that satisfies the requirements of paragraph (m) of this section.

Hearthstone is contracted with PFS-Teco as our third party certifier to review our QA/QC program, and to provide at least annual audits. Hearthstone's QA plan is included with the certification report.

7. Laboratory Sealing of Unit

A statement describing how the tested unit was sealed by the laboratory after the completion of certification testing and asserting that such unit will be stored by the manufacturer in the sealed state until 5 years after the certification test.

The unit has been sealed by Polytests and will be transferred back to Hearthstone. Hearthstone will store the unit in a sealed state for at least five years.

8. Statements that the wood heaters manufactured under this certificate will be—

(I) Similar in all material respects that would affect emissions as defined in § 60.531 to the wood heater submitted for certification testing, and labeled as prescribed in § 60.536 and 60.5478.

(II) Accompanied by an owner's manual that meets the requirements in § 60.536 and 60.5478. In addition, a copy of the owner's manual must be submitted to the Administrator and be available to the public on the manufacturer's web site.

I) The tested unit is the same in all material respects that would affect emissions to production units, and production units will be labeled in accordance with 60.536

(I) (II) All production units will include a copy of the owner's operation/installation manual that meets the requirements as specified in 60.536. A copy of the owner's manual has been provided with the report, and will be made available on Hearthstone's website once the unit is available for sale.

9. Third Party Certification Statement

A statement that the manufacturer has entered into contracts with an approved laboratory and an approved third-party certifier that satisfy the requirements of paragraph (f) of this section.

Hearthstone is contracted with PFS-Teco as our third party certifier.

10. Approved laboratory/third party Statement

A statement that the approved laboratory and approved third-party certifier are allowed to submit information on behalf of the manufacturer, including any claimed to be CBI.

Polytests and PFS-Teco are allowed to submit information related to EPA emissions testing performed by Polytests on behalf of Hearthstone, including any claimed CBI.

11. Manufacturer's Website Certification Test Reports Availability Statement

A statement that the manufacturer will place a copy of the certification test report and summary on the manufacturer's web site available to the public within 30 days after the Administrator issues a certificate of compliance.

Hearthstone will place a copy of the Non-CBI (or public version) of the certification test report and summary on our website as soon as the unit becomes available for sale.

12. Transferability Acknowledgement Statement

A statement of acknowledgment that the certificate of compliance cannot be transferred to another manufacturer or model line without written approval by the Administrator.

Hearthstone acknowledges that the certificate of compliance cannot be transferred to another manufacturer or model line without written approval by the Administrator.

13. Statement about Selling Wood Heaters without an EPA Certificate

A statement acknowledging that it is unlawful to sell, distribute or offer to sell or distribute an affected wood heater without a valid certificate of compliance.

Hearthstone acknowledges that it is unlawful to sell, distribute or offer to sell or distribute an affected wood heater without a valid certificate of compliance.

Print Name and Title: Simon Booth, Engineering Manager	**Date: 10/11/2023**
Signature of responsible representative of the manufacturer certifying the accuracy of the above statements:  The authorized or responsible party whose signature is above is certifying that the manufacturer has complied with and will continue to comply with all requirements of the 2015 NSPS for compliance certification and that the manufacturer remains responsible for compliance regardless of any error by the test laboratory or third-party certifier.	

Attachments

Instructions: Please complete the section applicable to your certification request. You may substitute your own data tables in lieu of the ones shown below provided that all the information is captured.

WOOD BURNING HEATERS

I. Test Method 28R for Certification and Auditing of Wood Heaters

A. SUMMARY RESULTS – ADJUSTABLE WOOD BURNING HEATERS

Test No.	Burn Rate (Kg/hr)	(E) Ave. Emission Rate g/hr	(OHE) %	Heat Output (BTU/HR)	CSA B415.1 CO emission g/min
2	0,87	1,771	79,0%	12 889	0,40
3	1,18	0,454	77,5%	17 078	0,18
4	1,59	0,556	77,7%	23 252	0,93
1	2,16	2,155	71,7%	29 191	3,04
Weighted particulate emission average of 4 test runs: 1,1 grams per hour.					
Weighted average HHV efficiency of 4 test runs: 77,3 %.					
Average Co 1,1 gr/min					