TEST REPORT

TEST OF A HYBRID WOOD STOVE FOR EMISSIONS AND EFFICIENCY CATALYST EQUIVALENCY

PER EPA METHODS 28R AND ASTM E2515 and ASTM E2780, MAY 2015

Client:
Hearthstone
317 Stafford ave.
Morrisville, Vt 05661

Model name: Green Mountain 40 model 8640; Craftsbury 2 model 8392, Hipster 14 AMB8240

Attention: Rafaël Sanchez

TESTED BY:

Services Polytests Inc.
695-B Gaudette
St-jean-sur-Richelieu, QC, J3B 7S7

TEST DATES: January 18th & 19th 2021
REPORT DATE: February 1st 2021
Project number: PI-20247-GM40

All services undertaken are subject to the following general policy: Reports are submitted for exclusive use of the clients to whom they are addressed. Their significance is subject to the adequacy and representative character of the samples and to the comprehensiveness of the tests, examinations or surveys made. This document may not be reproduced except in its entirety without the written permission from Services Polytests Services Polytests have not been involved in any R&D design consulting regarding this unit as requested by the NSPS..

Tested: written by:

Maxime Martin Danick Power, P. Eng

Verified by third party certifier (PFS):

SUMMARY

1 Introduction 5
1.1 General 5
1.2 Test unit information 5
1.3 Results 6
1.4 Pretest information 6
2 Summary of test results 6
2.1 Original Emissions Results from report PI-20189 6
2.2 Emission Results from catalyst equivalency run 7
2.3 Test facility conditions 7
2.4 Fuel qualities 7
2.5 Dilution tunnel flow rate measurements and sampling data (ASTM E2515) 8
2.6 Dilution tunnel dual train precision 8
2.7 General summary of results 8
3 Process description 9
3.1 Discussion 9
3.2 Unit dimensions 9
3.3 Air supply system 10
3.4 operation during test 11
3.5 Start-up operation 11
3.6 Sampling locations 11
3.7 Drawings 11
3.8 Emissions efficiency testing equipment list 11
4 Sampling methods 12
4.1 Particulate sampling 12
5 Quality assurance 12
5.1 Instrument calibration 12
5.1.1 Gas meters 12
5.1.2 SCALES 12
5.1.3 Gas analyzers 12
5.2 Test method procedures 12
5.2.1 Leak check procedures 12
5.2.2 Tunnel velocity flow measurement 12

5.2.3 Pm sampling proportionality (ASTM E2515) 12

List of Revision:

List of appendices

APPENDIX 1: Raw data, forms and results

APPENDIX 2: Proportionality results

APPENDIX 3: Calibration data

APPENDIX 4: Unit pre burn

APPENDIX 5: Participants

APPENDIX 6: Drawings and specifications

APPENDIX 7: Operator's manual

APPENDIX 8: Photographs of test set up

APPENDIX 9: Test load photographs

APPENDIX 10: Laboratory Operating Procedures

APPENDIX 11: Sample calculations

APPENDIX 12: Volume calculations

APPENDIX 13: Operating instruction

APPENDIX 14: Drawing Air flow pattern

1 INTRODUCTION

1.1 GENERAL

Laboratory

- Location: Services Polytests Inc., 695-B Gaudette St-jean-sur-Richelieu QC, Canada J3B 7S7
- Elevation: 100 feet above sea level

Test program

Purpose:

1) Unit qualification NSPS 2020, Certify the use of an alternative model of catalyst supplied by "Applied Ceramics" Hearthstone's intent is to have two approved models of catalyst from the same vendor, which use different mixtures of precious metals to avoid surge pricing in the precious metals market. "Applied Ceramics'" two models of catalysts can be used interchangeably in the stove.

2) Stove model Green Mountain40 have been tested in March 2019 (PI-20189) certificate number: 210-19 One maximum burn and one minimum burn have been done and found compliant with emission rate less than +0.5gr/hr above the original certification for the same burn rate, As per WDS-146 & WDS-138.

- Test dates: January 18th & 19th 2021
- Test methods used:
    - Particulate emissions: ASTM E2780-10 ; ASTM E2515-11 methods 28R as referred into 40 CFR Part 60 Subpart AAA
    - Efficiency: CSA B415.1-10

1.2 TEST UNIT INFORMATION

General

- Manufacturer: Hearthstone
- Product type: Hybrid wood stove
- Combustion system: catalytic, with pre-combustion
- Unit tested: Craftsbury Model 8392
- Option: optional convection fan can be installed on the wood stove
- Similar Model: Green Mountain 40 8640, Hipster 14 AMB 8240
- In summary: rear-exit version of the stove, named the "Craftsbury 2" (model# 8392) This rear-exit version has identical K-list firebox components, dimensions, and construction, the differences being a rear-exit option and revised cosmetics to the external shell. The "Hipster 14" (Model 8240) has identical K-list firebox components, dimensions, and construction, the difference being revised cosmetics. Refer Appendix 6 for all details.

1.3 RESULTS

Original Emission results obtained as per report PI-20189

- Average emission rate: 1.07 grams/hour
- Average Efficiency: 79.0%

Conformity: NSPS Phase 2020

1.4 PRETEST INFORMATION

Unit condition: The unit was received by carrier first week of January 2021 and found in good shape. The 50hrs of aging was done by the manufacturer (all data in Appendix 4).

Set up

- Venting system type: 6 inch diameter insulated chimney
- System height from floor: 15 feet
- Particularities: The unit was tested with the convection Fan ON for both tests.

Break in period

- Duration: the unit was pre burned by the manufacturer and run for at least 50 hours, adequate documentation of fuel additions, flue and unit temperatures recorded.
- Fuel: BC FIR between 19% and 25%

2 SUMMARY OF TEST RESULTS

2.1 ORIGINAL EMISSIONS RESULTS FROM REPORT PI-20189

Run Number	Test Date (AAA-MM-DD)	Emission Rate (g/hr)	Burn Rate (kg/hr)	1st hour Emission Rate (g/hr)	CSA B415.1 CO emission Gr/hr	CSA B415.1 CO emission Gr/Kg dry
1 (PI-20189)	2019-03-18	0,45	1,029	1,39	29,14	28,30
2 (PI-20189)	2019-03-19	1,67	1,773	3,11	8,56	4,84
3 (PI-20189)	2019-03-20	2,78	2,269	4,09	60,10	26,32
4 (PI-20189)	2019-03-21	0,61	1,167	1,27	16,33	13,94
5 (PI-20189)	2019-03-25	0,41	1,077	1,30	44,02	40,87
6 (PI-20189)	2019-03-26	0,69	0,920	1,82	40,67	44,18

2.2 EMISSION RESULTS FROM CATALYST EQUIVALENCY RUN

Run Number	Test Date (AAA-MM-DD)	Emission Rate (g/hr)	Burn Rate (kg/hr)	1st hour Emission Rate (g/hr)	CSA B415.1 CO emission Gr/hr	CSA B415.1 CO emission Gr/min
1	2021-01-18	1,99	2,238	2,41	11,34	0.189
2	2021-01-19	0,79	1,199	2,09	52,45	0.874

- Run 1 Catalyst equivalency comply to WTS-146 within less than +0.5gr/hr compared to run 3 (PI-20189) form the original test series.
- Run 2 Catalyst equivalency comply to WTS-146 within less than +0.5gr/hr compared to run 6 (PI-20189) form the original test series

2.3 TEST FACILITY CONDITIONS

Run Number	Room Temperature		Barometric pressure		Relative humidity		Air Velocity	
	Before (F)	After (F)	Before (in.Hg)	After (in.Hg)	Before (%)	After (%)	Before (ft/min)	After (ft/min)
1	69	73	29,943	29,796	26,4	25,7	0	0
2	69	72	29,737	29,766	27,8	25,4	0	0

2.4 FUEL QUALITIES

Run Number	Pre-test Load			Test Load						
	Loading Weight Wet Basis (lbs)	Moisture Content Dry Basis (%)	Coal bed Weight (lbs)	Weight Wet Basis (lbs)	Density Wet Basis (lbs/cuft)	Moisture Content Dry Basis (%)	Piece Length (in.)	Number of 2X4's	Number of 4x4's	Number of Spacers
1	10,78	20,64	2,0	9,76	7,450	21,11	13,5	5	0	16
2	11,06	21,32	2,0	9,70	7,405	21,02	13,5	5	0	16

2.5 Dilution tunnel flow rate measurements and sampling data (ASTM E2515)

Average dilution tunnel measurements				Sample Data			
Run Number	Burn Rate (Min)	Volumetric Flow Rate (dscf/min)	Total Temperatures (°R)	Volume sampled (DSCF)		Particulate catch (mg)	
				1	2	1	2
1	98	340,91	561,43	18,053	17,892	1,80	1,70
2	182	345,35	541,74	33,135	32,763	1,30	1,20

2.6 Dilution tunnel dual train precision

Run Number	Sample Ratio		Total Emission (g)		
	Train 1	Train 2	Train 1	Train 2	% Deviation
1	1850,63	1867,26	3,32	3,17	2,39%
2	1896,93	1918,47	2,47	2,30	3,44%

2.7 General summary of results

Run Number	Burn Rate (kg/hr)	Average Surface Temperature (F)	Change in surface Temperature (F)	Initial Draft (in. H^2O)	static pressure tunnel (in. H^2O)	Primary Air Setting	Run Time (min)
1	2,238	463,19	-21,5	0,018	0,200	maximum open	98
2	1,199	371,73	-42,3	0,014	0,180	minimum setting	182

3 PROCESS DESCRIPTION

3.1 DISCUSSION

The unit was delivered by the client and received in a good condition. Two runs have been done for Catalyst equivalency comparison with the optional convection fan at "ON" position. For this test series a new stove has been use for comparison test at minimum and maximum output, the original stove from report PI-20189 still sealed at manufacturer location.

3.2 UNIT DIMENSIONS

Baffle

- Location: between top of combustion chamber and hearth
- Restriction: 2.5 inch X 15.5 inch at the front of the unit
- Dimensions: cover the hearth area minus the restriction at the front
- Material: Vermiculite 1 inch thick.

Bricks

- Inside firebox refractory brick 1¼ inch. thick cover all the sides and the back of the combustion chamber bottom covered by ½ thick refractory brick

Flue gas exhaust

- Location: top flue
- Dimensions: 6 in. diameter
- Material: Cast Iron

Gasket

- Glass holder : 1/8 X ½ Flat
- Window : 1/4 Round
- Door gasket against facing: fiberglass 3/8 round inch diameter
- Refer to appendix 6 for complete list and location of each gaskets

Overall unit dimension

- Overall dimensions : 23 inch wide x 23 inch deep x 28 ¾ inch high
- Usable volume : 1.31 cuft

Convection fan

- Convection fan blower:
  - Free air : 150 CFM 110-120V (ref. : PT#90-57000)

Catalyst (appendix 6 for details):

- Advanced Catalyst Systems – WF-4250001484 (ref. PT 3050-020).
- Cell density: 50 CPSI
- Material: Fecralloy foil framed in 304 SS can
- Catalyst temperature probe located on the right side of the stove just behind by-pass handle

3.3 AIR SUPPLY SYSTEM

Description

- Primary air: Window wash design in cast iron channel fully gasketed on the top and bottom of the combustion chamber. Air intake on the middle-left side of the unit (if facing door of stove)
- Secondary air: secondary tube design with air intake coming from the bottom rear of unit, then up through a steel riser tube to the secondary air tube.

Characterization

The following table shows the inlet and outlet sections of each system. The air introduction system number is referred to on a set of drawings in Appendix 6.

AIR INTRODUCTION SYSTEM		INLET (1) sq. in.			OUTLET
Identification	Type	Imin	Imax	Controlled	(sq. in.)
APPENDIX 14 SHARED and PA	Primary	(air control Slide) 0.205	(air control Slide) 6.061	yes	(Air Wash) 4.766
APPENDIX 14 SHARED and SA	Secondary	(Riser opening) 0.600	(Riser opening) 0.600	yes	(Secondary Tube holes) 1.804
Appendix 14 TA	Pilot	(Orifice) 0.049	(Orifice) 0.049	None	(Orifice) 0.096

* This section would be filled by measuring and comparing with the manufacturer's drawings included in the test report.

<u>Legend</u>

Identification: Tag name referred to on drawings in Appendix 14, section airflow pattern
Type: Characterization of air intake
Imin: Minimum air intake of a particular air channel
Imax: Maximum air intake of a particular air channel
Controlled: Determines if a provision for air control is present
Outlet: Total air outlet of a particular air channel

3.4 OPERATION DURING TEST

All runs have been found appropriate, no anomalies happened and all runs below have been validate and found compliant. Some negative weight has been found on filters only, none on probe or gaskets, those negative weight have been handled properly.

Run #1
This run was performed on January 18th 2021. It lasted 98 minutes and a 2.23 kg/hr burn rate was obtained & emission at 2.00 gr/hr. The optional convection fan Option was at on position during the entire test. Air inlet was set at the maximum setting. Catalyst equivalency comply to WTS-146 within less than +0.5gr/hr compared to run 3 (PI-20189) form the original test series.

Run #2
This run was performed on January 19th 2021. It lasted 182 minutes and a 1.199 kg/hr burn rate was obtained & emission at 0.8 gr/hr. The optional convection fan Option was at on position during the entire test. Category 2 burn rate was obtained with the air inlet fully closed at the minimum setting. Catalyst equivalency comply to WTS-146 within less than +0.5gr/hr compared to run 6 (PI-20189) form the original test series.

- Details: Refer to the front page of each test run data sheets found in appendix for the detailed test sequence showing air supply settings and adjustments, fuel bed adjustments and operational specifics of the test unit.

Test fuel cribs

- Type of wood: Douglas fir, grade c or better, 19 to 25% dry basis moisture content
- Description: for each test, description of the fuel crib is found on the front page of each test run data sheet together with photograph in appendix.

3.5 START-UP OPERATION

The complete manufacturer's firing procedure of each burn rate category is fully described in appendix 13.

3.6 SAMPLING LOCATIONS

Particulate samples are collected from the dilution tunnel at a point 15 feet from the tunnel entrance. The tunnel has two elbows and two mixing baffles in the system ahead of the sampling section. The sampling section is a continuous 15 foot section of 8 inch diameter pipe straight over its entire length. Tunnel velocity pressure is determined by a standard pitot tube located 48 inches from the beginning of the sampling section. Thermocouple is installed on the pitot tube to measure the dry bulb temperature. MC is assumed, as allowed, to be 4%. Tunnel samplers are located 56 inches downstream of the pitot tube and 16 inches upstream from the end of this section.

3.7 DRAWINGS

Various drawings of the stack gas sampling train and of dilution tunnel system are found in Appendix 1.

3.8 EMISSIONS EFFICIENCY TESTING EQUIPMENT LIST

The complete test equipment list together with all corresponding calibration data can be found in Appendix 3.

4 SAMPLING METHODS

4.1 PARTICULATE SAMPLING

Particulates were sampled in strict accordance with ASTM E2515. This method uses two identical sampling systems with Gelman A/E 61631 binder free (or equivalent), 47 mm diameter filters. The dryers used in the sample systems are filled with "Drierite" before each test run.

5 QUALITY ASSURANCE

5.1 INSTRUMENT CALIBRATION

5.1.1 GAS METERS

At the conclusion of each test program the gas meters are verified using the reference dry gas meter. This process involves sampling the train operation for 1 cubic foot of volume. With readings made to .01 fr', the resolution is 1 %, giving an accuracy higher than the 2% required by the standard.

5.1.2 SCALES

Before each test program, the different scales used are checked with traceable calibration weights to ensure their accuracy.

5.1.3 GAS ANALYZERS

The continuous analyzers are zeroed and spanned before each test with NBS traceable gases. A mid-scale multi-component calibration gas is then analyzed (values are recorded). At the conclusion of a test, the instruments are checked again with zero, span and calibration gases (values are recorded only). The drift in each meter is then calculated and must not exceed 5% of the scale used for the test.

5.2 TEST METHOD PROCEDURES

5.2.1 LEAK CHECK PROCEDURES

Before and after each test, each sample train is tested for leaks. Leakage rates are measured and must not exceed 0.02 CFM or 4% of the sampling rate. Leak checks are performed checking the entire sampling train. Pre-test and post-test leak checks are conducted with a vacuum of 5 inches of mercury. Vacuum is monitored during each test and the highest vacuum reached is then used for the post-test vacuum value. If leakage limits are not met, the test run is rejected. During these tests, the vacuum is typically less than 2 inches of mercury. Thus, leakage rates reported are expected to be much higher than actual leakage during the tests.

5.2.2 TUNNEL VELOCITY FLOW MEASUREMENT

The tunnel velocity is calculated from a center point pitot tube signal multiplied by an adjustment factor. This factor is determined by a traverse of the tunnel as prescribed in EPA Method 1. Final tunnel velocities and flow rates are calculated from EPA Method 2, Equation 6.9 and 6.10. (Tunnel cross sectional area is the average from both lines of traverse.)

Pitot tubes are cleaned before each test and leak checks are conducted after each test.

5.2.3 PM SAMPLING PROPORTIONALITY (ASTM E2515)

Proportionalities were calculated in accordance with ASTM E2515. The data and results are found in appendix.

APPENDIX 1: Raw data, forms and results

POLYTESTS
TESTING THROUGH YOUR REALITY

Date: 2021-01-18 Manufacturer: Hearthstone Model: GM 40
Project #: PI 20247 Run: 1 Tech: MM Reviewer: SP

- kindling 25LBS start fire
- Fan on (low)
- bypass open
- At 1 9LBS close Door
- At 0 9LBS insert pre load
- After 2 min close Door
- At 10 LBS close bypass
- At 21LBS open Door, Rack coal bed close Door
- After 2 min insert load
- close Door immediatly

TEST LOAD CONFIGURATION

POLYTESTS
TESTING THROUGH YOUR REALITY

PRE / POST CHECKS

Date: 2021-01-18 Manufacturer: Hearthstone

Project #: PI 20247 Run: 1 Tech: MM Model: GM 40

Reviewer: DS

Moisture Meter Calibration Check:

Equipment #	Time	12%	22%
EM-191	7:00	ok	ok

Facility Conditions:

	Pre-Test	Post-Test
Air Velocity from less than 2 feet	0 (max50 Fpm)	0 (max50 Fpm)
Smoke Capture Check (tunnel velocity)	ok	NA
Picture 4 sides	ok	ok

Wood Heater Conditions:

Date Wood Heater Stack Cleaned	2021-01-18
Date Dilution Tunnel Cleaned	2021-01-18
Induced Draft Check (max 0.005 H2O)	ok
Traverse before ignition	ok
Flow Rate 140 cfm ±10%	ok

Temperature System:

Ambient (65°-90°F)	ok	°F
Wood Heater Surface (±125°F)	ok	°F

Proportional Checks:

Thermocouple check	ok
Pitot Clean	ok
Pitot verification	ok

Sampling Train ID Numbers:

	Train 1st hour	Train 1	Train 2
Probe	006	009	043
Filter Front	933	935	937
Filter Back	934	936	938
Filter Thermocouple	11	11	12
Filter (<90°F)	ok	ok	ok

POLYTESTS
TESTING THROUGH YOUR REALITY

SAMPLING EQUIPMENT CHECK OUT

Date: 2021-01-18 Manufacturer: Hearthstone Model: GM 40

Project #: pt 20247 Run: 1 Tech: MM Reviewer: DP

Leakage Checks Tunnel Samplers

	System 1st hour		System 1		System 2	
Unplugged Flow Rate = .25cfm	Pre-Test ASTM (-15) CSA B415 (-5)	Post-Test (max test)	Pre-Test ASTM (-15) CSA B415 (-5)	Post-Test (Max test)	Pre-Test ASTM (-15) CSA B415 (-5)	Post-Test (Max test)
Vacuum (inches Hg.)	-15	-15	-15	-15	-15	-15
Final 1minute DGM (Liter)	338 260 92	338 794 68	338 261 03	338 794 90	0 99689 58	100 219 51
Initial 1minute DGM (Liter)	338 260 88	338 794 60	338 261 01	338 794 85	0 99689 58	100 219 51
Change © (Liter)	0.04	0.08	0.02	0.05	∅	∅
Allowable leakage .04 x Sample rate or 0.28Lpm CSA B415 (0.56)						
Check OK	ok	ok	ok	ok	ok	ok

Leakage Checks Flue Gas Sampler

Plugged Probe	Pre Test	Post Test
Vacuum (inches Hg.)	-5	-5
Rotometer Reading (mml/min.)	0	0
Flow Rate (lpm)	1.5	1.5
Allowable (.02 x Sample Rate)	30	30
Check OK	ok	ok

Leakage Checks Pitot

Plugged Probe	Pre Test 3 H2o static	Pre Test 0.4-0.5 H2o velocity	Post Test 3 H2o Static	Post Test 0.4-0.5 H2o velocity
Vacuum (inches Hg.)	3	.4	3	.5
Check OK (no change after 15 sec.)	ok	ok	ok	ok

POLYTESTS
TESTING THROUGH YOUR REALITY

PRE-TEST SCALE AUDIT

Date: 2021-01-18 Manufacturer: Hearthstone Model: GM 40

Project #: pI 20247 Run: 1 Tech: MM Reviewer: SP

Scale Type	Audit		Measured Weight
	Equipment #	Weight	
Platform	EM-090	44 lbs, Class F	44 lbs
Wood	EM-090	44 lbs, Class F	44 lbs
Analytical	EM-128	100mg, Class S	100 mg
Analytical	EM-129	200 g, Class S	200 g

LIMITS OF WEIGHT RANGES

ANALYTICAL SCALE: ..... 50%-150% of dry filter weight, ± 0.1 mg
PLATFORM SCALE.....20%-80% of ideal test load weight, ± 0.1 lbs or 1%
WOOD SCALE .....20%-80% of ideal test load weight, ± 0.01 lbs or 1%

POLYTESTS
TESTING THROUGH YOUR REALITY

CONTINUOUS ANALYZERS

Date: 2021-01-18 Manufacturer: Hearthstone Model: GM 40
Project #: PI 20297 Run: 1 Tech: MM Reviewer: DC

FOR TUNNELS < 12 in

Barometric pressure (P_{bar}) 101.4 (KPa.) Static pressure (P_q) 0.18 (inches w.c.)
Inside diameter: Port A _____ Port B _____.
Tunnel cross sectional area: .1963Ft^2
Pitot tube type: Standard

Traverse Point	Position (inches)			Velocity Head Δ_p (inches H_2O)	Tunnel Temperature (°F)
	6 po	7 po	8 po		
A- Centroid	3.00	3.50	4	0.075	76.82
B - Centroid	3.00	3.50	4	0.075	75.59
A-1	0.40	0.50	0.50	0.061	76.82
A-2	1.50	1.75	2	0.077	76.38
A-3	4.50	5.25	6	0.070	76.38
A-4	5.60	6.5	7.5	0.062	76.06
B-1	0.40	0.50	0.50	0.062	75.59
B-2	1.50	1.75	2	0.068	75.19
B-3	4.50	5.25	6	0.071	75.19
B-4	5.60	6.5	7.5	0.060	75.06
				AVERAGE	

$$v_s = K_p C_p (\sqrt{\Delta p})_{avg} \sqrt{\frac{(T_s)_{avg}}{P_s M_s}}$$

Where,
C_p = pitot tube coefficient, dimension less = 0.99 for standard pitot.
Δ_p = manometer reading (inches H_2O)
T_s = average absolute dilution tunnel temperature (°F + 460)
P_s = absolute dilution tunnel gas pressure or $P_{bar} + P_{qg}$
P_q = static pressure $\frac{\text{in. } H_2O}{\{13.6\}}$
M_s = 28.56, wet molecular weight of stack gas (alternatively, it may be measured)
K_p = 85.49 pitot tube constant, (conversion factor for English units)

_$\Delta_p$avg. = average of the square roots of the velocity heads (Δ_p) measured at each traverse point.

POLYTESTS
TESTING THROUGH YOUR REALITY

CONTINUOUS ANALYZERS

Date: 2021-01-18 Manufacturer: Hearthstone Model: GM 40

Project #: pT 20247 Run: 1 Tech: MP Reviewer: DP

Pre-Test (Adjust and Record)

	ZERO		SPAN		CAL. (Record Only)	
CO	0	0	2.990	3.000	0.998	1.000
Tolerance CO	0	+/- 0.02	0.010	+/- 0.15	0.002	+/- 0.05
CO_2	0	0	17.92	18.00	9.74	10.06
Tolerance CO2	0	+/- 0.02	0.08	+/- 0.5	0.26	+/- 0.5
O_2 informative CSA B415 calculated value	na	na	na	na	na	na
	Actual	Should Be	Actual	Should Be	Actual	Should Be

Post Test (Record Only)

	Zero	Span	Cal.	Zero Drift	Limit	Span Drift	Limit	Cal. Drift	Limit	OK?	Not OK*
CO	0	2.996	0.995	0	0.02	0.006	0.15	0.003	0.05	✓	
CO_2	0	17.85	9.80	0	0.02	0.07	0.5	0.06	0.5	✓	

POLYTESTS
TESTING THROUGH YOUR REALITY

TEST DATA LOG

Date: 2021-01-18 Manufacturer: Hearthstone Model: GM 40

Project #: PI 20247 Run: 1 Tech: MM Reviewer: DP

RAW DRY GAS METER READINGS

	System 1	System 2	Blanck
Final (Liter)	338793,40	100217,36	236027,10
Initial (Liter)	338261,92	099690,38	235531,18

AMBIENT CONDITIONS

	Before	After
Barometer (kPa):	101,4	100,9
Dry Bulb (F):	70,5	72,9
Humidity (%):	26,4	25,7

Flow Meter

	Start	End
Flow meter reading	N.A	N.A

Flow Meter Verification

	Before	After
Flow meter Check (liters)	N.A	N.A
Scale Weight (Kg)	N.A	N.A

POLYTESTS
TESTING THROUGH YOUR REALITY

FUEL DATA

Date: 2021-01-18 Manufacturer: Hearthstone Model: GM 40

Project #: PT 20247 Run: 1 Tech: MM Reviewer: DO

FUEL DESCRIPTION:

Type of wood:

PRE-TEST LOAD

Piece Size	Weight	Meter Moisture Content (% dry)*				
1 1/2 x 3 1/2 x 8 in.	0.68 lbs.	20.8	21.0	21.0	21.1	21.3
1 1/2 x 3 1/2 x 8 in.	0.74 lbs.	22.0	21.3	21.4	21.6	21.3
1 1/2 x 3 1/2 x 8 in.	0.70 lbs.	20.9	21.0	21.0	20.8	20.6
1 1/2 x 3 1/2 x 8 in.	0.68 lbs.	22.0	22.1	22.1	22.0	22.2
1 1/2 x 3 1/2 x 8 in.	0.74 lbs.	20.9	20.8	20.8	20.7	20.7
1 1/2 x 3 1/2 x 8 in.	0.72 lbs.	19.9	20.0	20.0	19.9	19.4
1 1/2 x 3 1/2 x 8 in.	0.68 lbs.	20.0	20.0	20.1	20.4	20.3
1 1/2 x 3 1/2 x 8 in.	0.78 lbs.	19.9	19.6	19.4	19.8	19.7
1 1/2 x 3 1/2 x 8 in.	0.78 lbs.	20.1	20.3	20.3	20.3	20.6
1 1/2 x 3 1/2 x 8 in.	0.80 lbs.	20.4	20.3	20.6	20.5	20.4
1 1/2 x 3 1/2 x 8 in.	0.96 lbs.	21.0	21.1	21.3	21.0	21.0
1 1/2 x 3 1/2 x 8 in.	0.88 lbs.	20.8	20.4	20.6	20.6	20.5
1 1/2 x 3 1/2 x 8 in.	0.84 lbs.	20.4	20.3	20.6	20.8	20.4
1 1/2 x 3 1/2 x 8 in.	0.80 lbs.	20.6	20.3	20.3	20.2	20.3
x x in.	lbs.					
x x in.	lbs.					
x x in.	lbs.					
x x in.	lbs.					
x x in.	lbs.					
x x in.	lbs.					
x x in.	lbs.					
x x in.	lbs.					
x x in.	lbs.					

TEST LOAD WEIGHT: 10.78 lbs

POLYTESTS
TESTING THROUGH YOUR REALITY

FUEL DATA

Date: 2021-01-18 Manufacturer: Hearthstone Model: GM 40

Project #: PT 20247 Run: 1 Tech: MM Reviewer: KP

FUEL DESCRIPTION:

Type of wood :

TEST LOAD

Piece Size	Weight	Meter Moisture Content (% dry)*				
1 1/2 x 3 1/4 x 13.5 in.	1.58 lbs.	20.8	20.9	21.0	21.3	21.6
1 1/2 x 3 1/4 x 13.5 in.	1.62 lbs.	20.9	21.0	21.0	20.9	20.8
1 1/2 x 3 1/4 x 13.5 in.	1.58 lbs.	21.6	21.9	21.3	21.4	21.8
1 1/2 x 3 1/4 x 13.5 in.	1.58 lbs.	20.8	21.1	21.0	20.8	20.9
1 1/2 x 3 1/4 x 13.5 in.	1.56 lbs.	21.8	21.7	21.7	21.2	21.3
x x in.	lbs.					
1 1/2 x 3/4 x 5 in.	0.100 lbs.			20.6		
1 1/2 x 3/4 x 5 in.	0.120 lbs.			20.3		
1 1/2 x 3/4 x 5 in.	0.120 lbs.			20.9		
1 1/2 x 3/4 x 5 in.	0.100 lbs.			21.0		
1 1/2 x 3/4 x 5 in.	0.100 lbs.			21.3		
1 1/2 x 3/4 x 5 in.	0.100 lbs.			21.2		
1 1/2 x 3/4 x 5 in.	0.120 lbs.			19.9		
1 1/2 x 3/4 x 5 in.	0.120 lbs.			19.8		
1 1/2 x 3/4 x 5 in.	0.100 lbs.			20.0		
1 1/2 x 3/4 x 5 in.	0.100 lbs.			20.0		
1 1/2 x 3/4 x 5 in.	0.120 lbs.			20.8		
1 1/2 x 3/4 x 5 in.	0.120 lbs.			20.7		
1 1/2 x 3/4 x 5 in.	0.100 lbs.			20.6		
1 1/2 x 3/4 x 5 in.	0.100 lbs.			21.0		
1 1/2 x 3/4 x 5 in.	0.140 lbs.			21.1		
1 1/2 x 3/4 x 5 in.	0.180 lbs.			21.2		
x x in.	lbs.					
x x in.	lbs.					
x x in.	lbs.					
x x in.	lbs.					
x x in.	lbs.					

TEST LOAD WEIGHT: 9.76 lbs Min 20%: 1.95 Max 25%: 2.42

POLYTESTS
TESTING THROUGH YOUR REALITY

DILUTION TUNNEL PARTICULATE SAMPLER DATA

Date: 2021-01-14 Manufacturer: Hearthstone Model: GM 40

Project #: PT 20247 Run: 1 Tech: MM Reviewer: BP

Pre-test Weight Record		SYSTEM 1 – 1st hour				SYSTEM 1				
		Probe & Housing Number	Front Filter Number	Back Filter Number	gaskets	Probe & Housing Number	Front Filter Number	Back Filter Number	gaskets	Blanck
Date	Time	006	933	934	6	009	935	936	11	939
2021-01-14	17:00	61,3732	0,1258	0,1280	35,7100	61,4567	0,1284	0,1291	34,6312	0,1250
2021-01-18	9:00	61,3733	0,1258	0,1279	35,7099	61,4566	0,1283	0,1291	34,6313	0,1249

Post-test Weight Record		SYSTEM 1 – 1st hour				SYSTEM 1				
		Probe & Housing Number	Front Filter Number	Back Filter Number	gaskets	Probe & Housing Number	Front Filter Number	Back Filter Number	gaskets	Blanck
Date	Time	006	933	934	6	009	935	936	11	939
2021-01-18	16:30	61,3737	0,1264	0,1273	35,7122	61,4571	0,1281	0,1292	34,6325	0,1250
2021-01-21	8:00	61,3734	0,1263	0,1272	35,7114	61,4568	0,1280	0,1292	34,6319	0,1250
2021-01-22	8:00	61,3734	0,1263	0,1272	35,7113	61,4568	0,1280	0,1292	34,6319	0,1250

POLYTESTS
TESTING THROUGH YOUR REALITY

DILUTION TUNNEL PARTICULATE SAMPLER DATA

Date: 2021-01-14 Manufacturer: Hearthstone Model: GM 40

Project #: pI 20247 Run: 1 Tech: MM Reviewer: SO

Pre-test Weight Record		SYSTEM 2			
		Probe & Housing Number	Front Filter Number	Back Filter Number	gaskets
Date	Time	43	937	938	32
2021-01-14	17:00	109,1651	0,1286	0,1276	33,5339
2021-01-18	9:00	109,1652	0,1285	0,1275	33,5338 ~~33,5338~~ MM

Post-test Weight Record		SYSTEM 2			
		Probe & Housing Number	Front Filter Number	Back Filter Number	gaskets
Date	Time	43	937	938	32
2021-01-18	16:30	109,1659	0,1297	0,1273	33,5352
2021-01-21	8:00	109,1654	0,1296	0,1273	33,5344
2021-01-22	8:00	109,1654	0,1296	0,1274	33,5344

Paramètres

Tous les facteurs de corrections et autres paramètres qui peuvent être modifiés par l'utilisateur du fichier sont regroupés ici.

Code verrouillage:	HEA

Description du test

Test standard	EPA	
Run #	1	
Date	18-01-2021	
Technicien	M.M	
Project #	PI 20247	

Description de l'unité

Manufacturier	HEARTHSTONE	
Modèle	GM 40	
Combustion system	Cat	
Appliance type	WOOD STOVE	
Firebox volume	1,31	cu ft.
Appliance weight empty	N.A	lbs
Appliance weight full	N.A	lbs

Paramètres du test

Logging time	1	min
Manufacturer's rated heat output	N.A	BTU/h Donnée fournie par le manfacturier
Targeted category	4	
Targeted output	N.A	BTU/h
Cp steel	N.A	BTU/lb-°F

Échantillonnage

Blank sampling rate	0,20	cuft/min
Internal probe diameter	0,18	in.
Calibration Factor (DGM #1):	1,002	Dimensionless
Equipment number (DGM #1):	EM 179	
Calibration Factor (DGM #2):	1,001	Dimensionless
Equipment number (DGM #2):	EM 318	
Calibration Factor (DGM #3):	0,990	
Equipment number (DGM #3):	EM 179	Dimensionless

Tunnel

Targeted tunnel flow rate	350	scfm
Tunnel diameter	8	in.
Molecular weight	29	29 as per ASTM E2515
Pitot tube type	Standard	
Pitot tube coefficient	0,99	Dimensionless

Project nu.	PI 20247
Date	18-01-2021
Technicien	M.M

Fuel data

Fuel type	Cord	
Fuel specie	D. Fir	
HHV	19810,0	kJ/kg
%C	48,7	
%H	6,9	
%O	43,9	
%Ash	0,5	
HHV	8519,2	Btu/lb
LHV	7451,0	Btu/lb

Default Fuel Values

	D. Fir	Oak/Maple
HHV	19 810	19 887
%C	48,73	50
%H	6,87	6,6
%O	43,9	42,9
%Ash	0,5	0,5
HHV (Btu/lb)	8519	8552
LHV (Btu/lb)	7451	7480

	Start	End
Barometer (kPa):	101,4	100,9
Barometer (in.Hg):	29,943409	29,79575878
Dry Bulb (F):	70,5	72,9
Humidity (%):	26,4	25,7
Air velocity (ft/min)	0	0

DGM #1	Final:	11964,376	cuft	Final:	338793,400	Liter
	Initial:	11945,607	cuft	Initial:	338261,920	Liter
DGM #2	Final:	3539,143	cuft	Final:	100217,360	Liter
	Initial:	3520,533	cuft	Initial:	99690,380	Liter
DGM room	Final:	8335,219	cuft	Final:	236027,100	Liter
	Initial:	8317,705	cuft	Initial:	235531,180	Liter

Numéro de la ligne dans "Raw data" à partir duquel les données du VRAI test commencent: 74

Autres données à rentrer: dans preload data, load data, traverse et filter set weight

Project nu.	PI 20247
Date	18-01-2021
Technicien	M.M

FUEL LOAD DATA SHEET, CSA B415

Test Load Weight:

Lower	Ideal	Upper
8,3	9,2	10,1

* For boilers, a loading density factor of 10 lb/ft3 is applied

Load Volume: 0,31 cu. ft

Loading Density: 7,5 lbs./ft3

Number of Spaces: 16

Spacer weight: lbs

Load Density (wet): 31,6 lbs./ft3

Dry Wood Density: 26,1 lbs./ft3

Piece Size (in): Thick	Wide	Length	Weight lbs	Meter Moisture Content Dry Uncorrected %					Ave. MC x Weight	Volume Cubic Inches	Ave. MC %
1,5	3,5	13,5	1,58	20,80	20,90	21,00	21,30	21,60	33,3696	70,88	21,1
1,5	3,5	13,5	1,62	20,90	21,00	21,00	20,90	20,80	33,8904	70,88	20,9
1,5	3,5	13,5	1,58	21,60	21,90	21,30	21,40	21,80	34,128	70,88	21,6
1,5	3,5	13,5	1,58	20,80	21,10	21,00	20,80	20,90	33,0536	70,88	20,9
1,5	3,5	13,5	1,56	21,80	21,70	21,70	21,20	21,30	33,6024	70,88	21,5
1,5	0,75	5	0,10			20,60			2,06	5,63	20,6
1,5	0,75	5	0,12			20,30			2,436	5,63	20,3
1,5	0,75	5	0,12			20,90			2,508	5,63	20,9
1,5	0,75	5	0,10			21,00			2,1	5,63	21,0
1,5	0,75	5	0,10			21,30			2,13	5,63	21,3
1,5	0,75	5	0,10			21,20			2,12	5,63	21,2
1,5	0,75	5	0,12			19,90			2,388	5,63	19,9
1,5	0,75	5	0,12			19,80			2,376	5,63	19,8
1,5	0,75	5	0,10			20,00			2	5,63	20,0
1,5	0,75	5	0,10			20,00			2	5,63	20,0
1,5	0,75	5	0,12			20,80			2,496	5,63	20,8
1,5	0,75	5	0,12			20,70			2,484	5,63	20,7
1,5	0,75	5	0,10			20,60			2,06	5,63	20,6
1,5	0,75	5	0,10			21,00			2,1	5,63	21,0
1,5	0,75	5	0,14			21,10			2,954	5,63	21,1
1,5	0,75	5	0,18			21,20			3,816	5,63	21,2
										0,00	
										0,00	
										0,00	
										0,00	
										0,00	
										0,00	
										0,00	
										0,00	
										0,00	
								SUM MCx	206,072		20,8 %

Test Load Weight: 9,76 lbs.

Dry Weight: 3,66 kg.

Average Moisture Content: %

Dry: 21,11 Dry(EPA) 21,11

Dry(B415 21,11

21,11

Must be 19-25

Wet: 17,43

must be 15,2-22

Coal Bed Range: 2,0 lbs. to 2,4 lbs.

TEST CHARGE:

Coal bed weight: 2 lbs.

Project nu.	PI 20247
Date	18-01-2021
Technicien	

Filter set weight

	System 1 (g) 1st hour				System 1 (g)				System 2 (g)				Ambient blank (g)	Date	Heure
	probe	front	back	gasket	probe	front	back	gasket	probe	front	back	gasket	Filter		
Number	6	933	934	6	9	935	936	11	43	937	938	32	939		
Before (1)															
Before (2)															
Before (3)															
Before (4)															
Before (5)	61,3732	0,1258	0,1280	35,7100	61,4567	0,1284	0,1291	34,6312	109,1651	0,1286	0,1276	33,5339	0,1250	2021-01-14	17:00
Before (6)	61,3733	0,1258	0,1279	35,7099	61,4566	0,1283	0,1291	34,6313	109,1652	0,1285	0,1275	33,5338	0,1249	2021-01-18	09:00
After (1)	61,3737	0,1264	0,1273	35,7122	61,4571	0,1281	0,1292	34,6325	109,1659	0,1297	0,1273	33,5352	0,1250	2021-01-18	16:30
After (2)	61,3734	0,1263	0,1272	35,7114	61,4568	0,1280	0,1292	34,6319	109,1654	0,1296	0,1273	33,5344	0,1250	2021-01-21	08:00
After (3)	61,3734	0,1263	0,1272	35,7113	61,4568	0,1280	0,1292	34,6319	109,1654	0,1296	0,1274	33,5344	0,1250	2021-01-22	08:00
After (4)															
After (5)															
After (6)	61,3734	0,1263	0,1272	35,7113	61,4568	0,1280	0,1292	34,6319	109,1654	0,1296	0,1274	33,5344	0,1250	2021-01-22	08:00
Difference	0,0001	0,0005	-0,0007	0,0014	0,0002	-0,0003	0,0001	0,0006	0,0002	0,0011	-0,0001	0,0006	0,0001		
Total (mg)		1,3				1,9				1,8			0,1		
Total ajusté (mg)		**1,20**				**1,80**				**1,70**					

Project nu.	PI 20247
Date	18-01-2021
Technicien	mm

		Average	0,04	9,43	#DIV/0!	524,12	69,35	101,43	630,22	311,97	473,08	471,30	429,40	970,49	0,18	71,47	71,99	75,58	0,18	73,54	75,71	77,24	0,07	0,02	
*		*	*	*	*	*1	*2	*3	*4	*5	*6	*7	*8	*	Mass flow 1	DGM 1	DGM 1	Filter 1	Mass flow 2	DGM 2	DGM 2	Filter 2	Tunnel Veloc	Flue draft	Change in
Elapsed		Weight				Flue	Room	Tunnel	Unit	Unit	Unit	Unit	Unit	Catalyst	Reading	Inlet T	Outlet T	Temp	Reading	Inlet T	Outlet T	Temp	Pressure	Pressure	Surface
Time	Raw data row	Remaining	CO	CO_2	O_2	Gas	Temp	Dry Bulb	Top	Back	R.Side	L.Side	Bottom	up									in wc	in wc	Temp.
min		lbs	%	%	%	°F	°F	°F	°F	°F	°F	°F	°F	°F	cuft/min	oF	oF	oF	cuft/min	oF	oF	oF	in wc	in wc	°F
0,00	74,00	9,4	0,1	1,0	0,0	458,7	69,5	147,2	642,2	301,2	403,0	383,0	517,7	813,0	0,18	70,57	70,03	71,57	0,18	70,13	69,87	71,64	0,07	0,02	0
1,0	75,0	9,3	0,1	2,8	0,0	487,2	69,4	105,4	626,4	304,1	408,2	388,2	522,5	827,8	0,18	70,84	70,06	71,71	0,18	70,24	70,02	71,93	0,07	0,02	0,4585694
2,0	76,0	9,2	0,0	5,4	0,0	500,6	69,1	102,9	615,5	307,0	412,1	392,1	526,0	888,7	0,18	70,80	70,06	71,82	0,18	70,38	70,16	72,09	0,07	0,02	1,1053712
3,0	77,0	9,0	0,0	9,3	0,0	519,3	69,0	102,6	614,1	309,3	414,8	394,8	527,1	1025,4	0,18	70,71	70,06	71,93	0,18	70,42	70,26	72,23	0,07	0,02	2,5762456
4,0	78,0	8,9	0,0	11,2	0,0	534,8	68,8	102,7	617,3	310,8	416,8	396,8	526,6	1094,2	0,18	70,62	70,09	72,10	0,18	70,50	70,37	72,45	0,08	0,02	4,24668
5,0	79,0	8,7	0,0	11,6	0,0	545,4	69,0	104,1	621,8	310,9	418,2	398,2	523,3	1117,9	0,18	70,58	70,12	72,26	0,18	70,56	70,50	72,63	0,07	0,02	5,0548036
6,0	80,0	8,5	0,0	11,6	0,0	553,5	68,6	103,8	625,9	311,3	418,7	398,7	521,1	1130,9	0,18	70,25	70,08	72,42	0,18	70,49	70,61	72,82	0,07	0,02	5,690741
7,0	81,0	8,3	0,0	11,8	0,0	558,7	68,7	104,1	628,6	311,0	419,5	399,5	517,1	1134,0	0,18	69,99	70,02	72,60	0,18	70,39	70,73	73,00	0,07	0,02	5,6951662
8,0	82,0	8,1	0,0	11,5	0,0	563,1	68,9	103,2	634,7	310,7	419,4	399,4	512,6	1150,0	0,18	70,05	70,04	72,76	0,18	70,52	70,86	73,15	0,07	0,02	5,9022706
9,0	83,0	7,9	0,0	11,6	0,0	569,1	68,8	104,5	638,3	310,2	419,6	399,6	506,6	1156,6	0,18	70,21	70,12	72,94	0,18	70,74	71,00	73,35	0,07	0,02	5,4484254
10,0	84,0	7,7	0,0	11,8	0,0	572,0	68,7	105,1	643,5	308,6	420,3	400,3	501,6	1154,3	0,18	70,32	70,17	73,14	0,18	70,88	71,15	73,60	0,07	0,02	5,399658
11,0	85,0	7,5	0,0	11,6	0,0	573,3	68,7	104,6	646,7	308,1	419,6	399,6	497,3	1146,4	0,18	70,36	70,24	73,32	0,18	71,05	71,33	73,78	0,07	0,02	4,8433536
12,0	86,0	7,4	0,0	11,5	0,0	575,8	68,5	105,8	650,4	306,4	419,9	399,9	492,2	1149,3	0,18	70,41	70,24	73,51	0,18	71,14	71,48	74,00	0,07	0,02	4,3198306
13,0	87,0	7,1	0,0	11,6	0,0	577,9	68,5	106,4	653,0	305,4	420,1	399,6	487,3	1155,7	0,18	70,44	70,24	73,72	0,18	71,27	71,64	74,24	0,07	0,02	3,6434448
14,0	88,0	7,0	0,0	11,8	0,0	579,3	68,9	106,5	656,8	304,1	420,1	400,2	482,1	1151,1	0,18	70,44	70,32	73,91	0,18	71,43	71,84	74,42	0,07	0,02	3,2023868
15,0	89,0	6,8	0,0	11,5	0,0	579,9	69,2	106,1	659,5	303,5	420,8	400,8	477,2	1146,5	0,18	70,54	70,38	74,13	0,18	71,59	72,01	74,65	0,08	0,02	2,9317446
16,0	90,0	6,6	0,0	11,7	0,0	580,9	69,0	106,3	661,8	302,3	421,5	401,5	472,7	1146,6	0,18	70,59	70,43	74,31	0,18	71,71	72,21	74,85	0,07	0,02	2,5289492
17,0	91,0	6,4	0,0	11,7	0,0	582,3	68,8	106,0	664,4	301,7	421,4	402,2	468,2	1146,8	0,18	70,68	70,45	74,51	0,18	71,90	72,38	75,06	0,07	0,02	2,1531312
18,0	92,0	6,2	0,0	11,8	0,0	583,0	68,8	106,0	666,5	301,2	422,3	403,2	464,2	1152,6	0,18	70,70	70,50	74,69	0,18	72,01	72,56	75,25	0,07	0,02	2,0358646
19,0	93,0	6,0	0,0	12,0	0,0	584,2	68,7	106,5	669,7	300,9	422,3	404,2	459,9	1159,7	0,18	70,77	70,61	74,86	0,18	72,21	72,78	75,42	0,07	0,02	1,9710328
20,0	94,0	5,8	0,0	12,1	0,0	584,7	69,1	105,9	672,3	299,9	423,3	405,3	455,7	1158,8	0,18	70,79	70,65	75,05	0,18	72,27	72,93	75,59	0,07	0,02	1,859656
21,0	95,0	5,7	0,0	12,0	0,0	584,8	69,5	105,4	673,2	300,3	423,0	406,6	452,0	1162,7	0,18	70,91	70,76	75,20	0,18	72,39	73,09	75,74	0,07	0,02	1,6014528
22,0	96,0	5,5	0,0	11,9	0,0	584,4	69,3	105,8	675,9	299,6	424,3	407,9	448,1	1157,6	0,18	70,98	70,81	75,37	0,18	72,43	73,31	75,90	0,07	0,02	1,6956056
23,0	97,0	5,3	0,0	12,0	0,0	584,5	69,2	106,2	677,2	299,4	425,0	409,4	444,2	1173,2	0,18	71,00	70,89	75,50	0,18	72,55	73,48	76,08	0,07	0,02	1,5769106
24,0	98,0	5,2	0,1	12,2	0,0	585,1	69,8	106,1	678,5	299,9	424,8	411,1	440,6	1175,6	0,18	71,12	71,01	75,67	0,18	72,77	73,68	76,23	0,07	0,02	1,5404602
25,0	99,0	5,0	0,0	12,3	0,0	586,2	70,0	105,6	680,3	300,0	426,4	412,9	436,9	1182,5	0,18	71,22	71,11	75,82	0,18	72,95	73,83	76,37	0,07	0,02	1,84917
26,0	100,0	4,8	0,1	12,4	0,0	585,9	69,6	106,8	683,7	300,1	427,7	414,8	434,1	1192,7	0,18	71,33	71,17	75,99	0,18	73,10	74,02	76,55	0,08	0,02	2,6258302
27,0	101,0	4,6	0,1	12,7	0,0	588,8	69,8	105,4	684,9	299,7	428,7	416,9	431,1	1206,4	0,18	71,35	71,26	76,11	0,18	73,16	74,16	76,72	0,07	0,02	2,826538
28,0	102,0	4,5	0,1	13,2	0,0	591,1	69,3	106,2	689,1	299,6	430,0	419,3	427,8	1221,6	0,18	71,35	71,31	76,26	0,18	73,20	74,36	76,84	0,07	0,02	3,7164616
29,0	103,0	4,3	0,1	13,8	0,0	594,8	69,4	106,7	694,3	299,3	432,6	421,6	424,9	1235,9	0,18	71,41	71,35	76,41	0,18	73,25	74,49	77,02	0,07	0,02	5,0913822
30,0	104,0	4,0	0,1	14,2	0,0	596,8	69,8	107,2	700,1	299,7	434,6	424,2	422,3	1243,7	0,18	71,40	71,35	76,53	0,18	73,36	74,61	77,16	0,07	0,02	6,7292176
31,0	105,0	3,9	0,1	14,4	0,0	599,8	69,4	106,8	706,2	300,4	437,0	427,0	419,3	1247,7	0,18	71,44	71,33	76,69	0,18	73,40	74,72	77,30	0,07	0,02	8,5471132
32,0	106,0	3,7	0,1	14,4	0,0	601,2	69,7	107,0	712,2	301,1	439,5	429,9	416,8	1254,6	0,18	71,48	71,35	76,81	0,18	73,47	74,85	77,44	0,07	0,02	10,433124
33,0	107,0	3,6	0,1	14,7	0,0	602,7	69,8	107,8	720,1	301,7	441,9	432,9	414,1	1260,7	0,18	71,51	71,39	76,94	0,18	73,55	74,98	77,59	0,07	0,02	12,717395
34,0	108,0	3,4	0,2	14,8	0,0	605,5	69,4	107,5	727,1	302,8	444,2	435,9	411,4	1259,9	0,18	71,60	71,57	77,04	0,18	73,72	75,09	77,71	0,07	0,02	14,852344
35,0	109,0	3,2	0,1	14,7	0,0	606,8	69,7	106,9	733,2	303,5	447,2	439,3	409,2	1241,6	0,18	71,65	71,64	77,11	0,18	73,88	75,22	77,85	0,07	0,02	17,05968
36,0	110,0	3,1	0,1	14,0	0,0	604,7	69,6	107,8	735,7	304,4	449,7	442,9	406,8	1216,0	0,18	71,73	71,81	77,24	0,18	73,96	75,38	77,95	0,07	0,02	18,460529
37,0	111,0	3,0	0,1	14,1	0,0	603,5	69,3	107,4	740,8	305,3	452,7	446,8	404,6	1200,7	0,18	71,74	71,88	77,34	0,18	73,95	75,51	78,05	0,07	0,02	20,587738
38,0	112,0	2,8	0,1	14,1	0,0	601,6	69,4	106,7	742,0	307,2	455,6	451,1	402,8	1188,9	0,18	71,76	71,91	77,43	0,18	74,05	75,66	78,17	0,07	0,02	22,305725
39,0	113,0	2,6	0,1	14,1	0,0	602,0	69,9	106,6	743,9	308,0	458,9	455,6	400,7	1185,3	0,18	71,76	71,94	77,57	0,18	74,08	75,84	78,27	0,07	0,02	23,963275
40,0	114,0	2,5	0,2	14,6	0,0	601,8	69,9	107,2	747,1	309,0	462,5	460,3	399,1	1189,3	0,18	71,84	71,98	77,67	0,18	74,15	75,97	78,38	0,07	0,02	26,17525
41,0	115,0	2,4	0,3	14,8	0,0	600,4	69,9	106,6	749,9	310,2	465,9	465,4	397,5	1167,2	0,18	71,88	72,00	77,79	0,18	74,23	76,06	78,49	0,07	0,02	28,334607
42,0	116,0	2,2	0,3	14,4	0,0	596,1	69,8	106,9	751,9	311,2	469,8	470,7	395,8	1100,3	0,18	71,92	72,08	77,89	0,18	74,26	76,18	78,59	0,07	0,02	30,420624
43,0	117,0	2,1	0,1	13,9	0,0	590,7	69,9	105,9	754,6	312,9	473,5	476,3	394,8	1062,0	0,18	71,94	72,06	77,97	0,18	74,29	76,29	78,66	0,07	0,02	33,000202
44,0	118,0	2,0	0,0	13,1	0,0	584,0	69,7	105,6	757,0	313,7	478,1	482,3	393,7	1030,5	0,18	71,93	72,04	78,03	0,18	74,22	76,42	78,74	0,07	0,02	35,533026
45,0	119,0	1,9	0,0	12,1	0,0	577,2	69,8	104,9	756,3	314,2	482,7	488,5	392,6	1003,9	0,18	71,94	72,06	78,13	0,18	74,29	76,55	78,82	0,07	0,02	37,436859
46,0	120,0	1,8	0,0	11,1	0,0	568,9	69,9	104,9	754,1	315,3	487,4	494,7	391,7	984,0	0,18	71,95	72,07	78,19	0,18	74,34	76,64	78,88	0,07	0,02	39,196924
47,0	121,0	1,7	0,0	10,5	0,0	561,6	70,1	104,8	747,9	316,7	491,5	500,8	391,0	966,6	0,18	71,99	72,14	78,23	0,18	74,41	76,72	78,94	0,08	0,02	40,148169
48,0	122,0	1,7	0,0	10,2	0,0	553,7	69,8	104,0	742,3	318,2	495,9	506,7	390,9	954,7	0,18	72,08	72,26	78,31	0,18	74,57	76,83	78,99	0,07	0,02	41,359766
49,0	123,0	1,6	0,0	10,1	0,0	548,9	70,0	103,4	735,9	319,7	499,6	512,3	391,0	947,4	0,18	72,06	72,27	78,34	0,18	74,57	76,89	79,06	0,08	0,02	42,265412
50,0	124,0	1,5	0,0	9,9	0,0	543,6	70,0	103,0	729,1	320,5	503,8	517,8	390,7	939,0	0,18	72,05	72,27	78,39	0,18	74,54	76,99	79,10	0,08	0,02	42,928735
51,0	125,0	1,5	0,0	9,7	0,0	538,8	69,8	102,7	721,4	321,6	507,1	522,6	391,4	928,6	0,18	72,13	72,28	78,45	0,18	74,60	77,11	79,12	0,08	0,02	43,396851
52,0	126,0	1,4	0,0	9,3	0,0	533,7	69,6	101,8	713,4	322,7	510,5	527,2	391,5	914,6	0,18	72,09	72,29	78,46	0,18	74,59	77,17	79,11	0,08	0,02	43,619641
53,0	127,0	1,4	0,0	9,1	0,0	529,6	69,6	101,3	704,9	324,0	513,5	531,1	392,1	911,1	0,18	72,04	72,41	78,52	0,18	74,58	77,24	79,14	0,07	0,02	43,694305
54,0	128,0	1,3	0,0	8,9	0,0	525,6	69,3	101,4	696,1	323,9	515,9	534,6	392,5	904,2	0,18	72,08	72,50	78,53	0,18	74,62	77,31	79,15	0,07	0,02	43,167768
55,0	129,0	1,3	0,0	8,6	0,0	520,3	69,6	101,1	687,0	324,8	518,5	537,7	393,6	894,2	0,18	72,13	72,50	78,55	0,18	74,65	77,39	79,15	0,08	0,02	42,898798
56,0	130,0	1,2	0,0	8,5	0,0	515,8	69,6	100,4	677,9	325,1	520,4	540,2	394,1	882,3	0,18	72,17	72,59	78,56	0,18	74,69	77,52	79,14	0,08	0,02	42,10567
57,0	131,0	1,2	0,0	8,2	0,0	511,1	69,7	100,5	670,0	324,9	522,3	542,1	394,6	871,1	0,18	72,18	72,64	78,56	0,18	74,67	77,62	79,11	0,08	0,02	41,340326
58,0	132,0	1,2	0,0	8,0	0,0	506,7	69,8	99,8	661,2	325,8	524,0	543,4	395,7	860,5	0,18	72,14	72,63	78,56	0,18	74,68	77,67	79,12	0,08	0,02	40,573608
59,0	133,0	1,1	0,0	7,7	0,0	502,4	69,6	99,4	651,3	326,3	525,2	544,3	396,4	854,6	0,18	72,10	72,63	78,54	0,18	74,67	77,71	79,12	0,07	0,02	39,250812
60,0	134,0	1,1	0,0	7,6	0,0	499,0	69,7	99,0	643,0	326,8	526,5	545,0	397,4	848,9	0,18	72,09	72,74	78,52	0,18	74,73	77,75	79,12	0,08	0,02	38,29848
61,0	135,0	1,1	0,0	7,6	0,0	496,3	69,7	98,6	634,8	327,5	526,7	545,1	398,2	846,4	0,18	72,07	72,86	73,18	0,18	74,74	77,77	79,12	0,08	0,02	37,02179
62,0	136,0	1,0	0,0	7,5	0,0	492,8	69,6	98,0	627,8	328,0	527,2	544,9	398,8	841,5	0,18	71,95	72,82	73,39	0,18	74,66	77,88	79,03	0,08	0,02	35,908161
63,0	137,0	0,9	0,0	7,4	0,0	489,5	69,5	98,0	620,4	328,1	527,3	544,5	400,1	836,8	0,18	71,90	72,83	73,52	0,18	74,63	77,93	79,04	0,08	0,02	34,646783
64,0	138,0	1,0	0,0	7,4	0,0	488,3	69,5	97,7	612,5	328,3	526,8	543,9	401,1	832,9	0,18	71,86	72,85	73,60	0,18	74,59	77,96	79,00	0,08	0,02	33,057849
65,0	139,0	0,9	0,0	7,1	0,0	484,4	69,5	97,4	605,3	328,7	527,4	543,2	402,2	827,7	0,18	71,82	72,86	73,70	0,18	74,55	77,94	78,99	0,08	0,02	31,901202
66,0	140,0	0,9	0,0	6,6	0,0	481,2	68,9	97,3	598,3	328,4	526,4	542,2	403,3	824,6	0,18	71,82	72,91	73,80	0,18	74,55	77,92	78,95	0,08	0,02	30,282214
67,0	141,0	0,9	0,0	6,5	0,0	478,0	69,2	96,4	591,1	328,5	526,6	541,2	404,1	821,6	0,18	71,81	72,87	73,89	0,18	74,56	77,96	78,93	0,07	0,02	28,88681
68,0	142,0	0,8	0,0	6,5	0,0	475,5	69,3	96,8	584,6	328,1	526,0	539,8	405,2	818,6	0,18	71,80	72,88	73,99	0,18	74,54	77,99	78,92	0,07	0,02	27,307306
69,0	143,0	0,8	0,0	6,6	0,0	474,0	69,3	96,6	578,4	327,4	525,0	538,1	406,2	816,0	0,18	71,81	72,93	74,10	0,18	74,54	77,95	78,91	0,08	0,02	25,595929
70,0	144,0	0,8	0,0	6,5	0,0	470,9	69,3	96,2	572,1	327,4	524,1	536,3	407,2	813,4	0,18	71,80	73,01	74,22	0,18	74,57	77,95	78,86	0,08	0,02	23,989258
71,0	145,0	0,8	0,0	6,6	0,0	470,4	69,5	96,3	566,6	326,3	523,1	533,9	407,8	810,9	0,18	71,79	72,96	74,29	0,18	74,55	77,94	78,81	0,07	0,02	22,097296
72,0	146,0	0,7	0,0	6,6	0,0	468,0	69,4	96,2	561,4	325,0	521,5	531,6	408,6	808,4	0,18	71,78	72,93	74,45	0,18	74,52	77,98	78,77	0,07	0,02	20,183136
73,0	147,0	0,6	0,0	6,5	0,0	466,9	69,4	95,9	556,8	323,7	519,8	529,2	409,6	805,8	0,18	71,77	72,91	74,54	0,18	74,48	77,97	78,71	0,08	0,02	18,395978
74,0	148,0	0,6	0,0	6,5	0,0	465,7	69,5	95,6	552,3	322,8	518,5	527,0	410,3	802,5	0,18	71,77	73,01	74,66	0,18	74,53	77,97	78,66	0,08	0,02	16,73382
75,0	149,0	0,6	0,0	6,5	0,0	463,4	69,5	95,3	548,0	321,5	516,8	524,4	411,1	798,8	0,18	71,74	73,04	74,76	0,18	74,53	78,00	78,65	0,08	0,02	14,913666
76,0	150,0	0,6	0,0	6,5	0,0	461,5	69,4	95,1	543,6	320,3	515,1	521,9	412,0	794,4	0,18	71,73	73,01	74,89	0,18	74,45	78,01	78,61	0,08	0,02	13,146722
77,0	151,0	0,6	0,0	6,4	0,0	459,6	69,4	94,8	538,8	319,3	513,6	519,4	412,9	790,2	0,18	71,70	72,99	74,99	0,18	74,48	78,02	78,56	0,08	0,02	11,360168
78,0	152,0	0,6	0,0	6,4	0,0	458,3	69,4	95,3	534,9	318,2	511,8	516,9	413,8	786,0	0,18	71,67	73,08	75,06	0,18	74,44	78,02	78,51	0,07	0,02	9,6720888
79,0	153,0	0,5	0,0	6,4	0,0	457,2	69,4	95,0	531,0	317,4	509,4	514,2	414,2	782,5	0,18	71,64	73,11	75,18	0,18	74,36	78,03	78,46	0,07	0,02	7,792682
80,0	154,0	0,5	0,0	6,4	0,0	455,6	69,5	94,8	527,5	316,3	507,9	511,8	415,5	779,6	0,18	71,66	73,15	75,26	0,18	74,40	78,01	78,41	0,07	0,02	6,3623782
81,0	155,0	0,4	0,0	6,4	0,0	453,9	69,4	95,1	523,7	315,0	505,4	509,1	416,1	777,2	0,18	71,69	73,18	75,32	0,18	74,38	78,01	78,33	0,08	0,02	4,4094364
82,0	156,0	0,4	0,0	6,4	0,0	453,2	69,3	94,5	520,9	314,0	504,1	506,5	416,8	777,1	0,18	71,71	73,13	75,38	0,18	74,37	78,05	78,31	0,08	0,02	3,023627
83,0	157,0	0,4	0,0	6,3	0,0	451,7	68,9	94,6	517,9	313,3	501,7	503,9	417,6	775,9	0,18	71,73	73,29	75,44	0,18	74,53	78,06	78,23	0,07	0,02	1,4197268
84,0	158,0	0,4	0,0	6,3	0,0	451,0	69,3	93,9	514,8	312,1	500,0	501,4	418,3	771,3	0,18	71,69	73,27	75,49	0,18	74,50	78,08	78,17	0,07	0,02	-0,116504
85,0	159,0	0,3	0,0	6,2	0,0	448,4	69,1	93,6	511,2	311,1	498,8	498,8	419,3	766,3	0,18	71,67	73,21	75,55	0,18	74,47	78,09	78,13	0,08	0,02	-1,623279
86,0	160,0	0,3	0,0	5,9	0,0	445,3	68,9	93,6	507,3	310,2	497,2	496,5	420,4	758,7	0,18	71,64	73,17	75,61	0,18	74,43	78,12	78,10	0,08	0,02	-3,129785
87,0	161,0	0,3	0,0	5,8	0,0	443,7	69,3	93,9	503,8	309,2	495,4	494,2	421,1	755,5	0,18	71,64	73,16	75,66	0,18	74,42	78,15	78,00	0,08	0,02	-4,697455
88,0	162,0	0,2	0,0	5,8	0,0	442,1	69,2	93,5	500,7	308,1	493,7	491,7	421,9	755,7	0,18	71,62	73,14	75,69	0,18	74,36	78,18	77,97	0,08	0,02	-6,217859
89,0	163,0	0,2	0,0	5,8	0,0	440,6	69,1	93,4	497,6	306,8	491,9	489,6	422,7	756,3	0,18	71,68	73,24	75,75	0,18	74,49	78,21	77,92	0,08	0,02	-7,70556
90,0	164,0	0,2	0,0	5,8	0,0	439,7	69,3	93,1	494,1	306,6	489,9	487,2	422,9	755,9	0,18	71,70	73,35	75,79	0,18	74,51	78,23	77,87	0,08	0,02	-9,288525
91,0	165,0	0,2	0,0	5,8	0,0	439,2	69,5	92,6	491,2	305,3	488,4	484,6	423,4	755,9	0,18	71,66	73,32	75,81	0,18	74,46	78,28	77,82	0,08	0,02	-10,85343
92,0	166,0	0,1	0,0	5,8	0,0	437,2	68,7	92,7	488,3	304,5	486,3	482,4	424,0	753,2	0,18	71,63	73,29	75,81	0,18	74,43	78,28	77,75	0,07	0,02	-12,3384
93,0	167,0	0,1	0,0	5,7	0,0	436,8	68,6	92,9	486,2	303,7	484,9	480,0	424,5	746,9	0,18	71,62	73,27	75,83	0,18	74,46	78,27	77,68	0,08	0,02	-13,57795
94,0	168,0	0,1	0,0	5,6	0,0	434,9	69,1	91,9	483,1	302,8	483,2	477,9	424,9	742,5	0,18	71,63	73,32	75,87	0,18	74,62	78,29	77,63	0,08	0,02	-15,05817
95,0	169,0	0,1	0,0	5,5	0,0	433,6	69,0	92,3	480,4	301,7	481,2	475,6	425,0	741,8	0,18	71,61	73,32	75,90	0,18	74,61	78,32	77,57	0,08	0,02

SFBA EPA EMISSION RESULTS

Test Duration: **98** min

PRESSURE FACTOR:	DGM 1	0,96677	
	DGM 2	0,97218	
	DGM 3	0,99831	
TEMPERATURE FACTORS	DGM 1	0,99299	
	DGM 2	0,98760	
	DGM 3	0,99746	
VOLUMES SAMPLED	DGM 1	18,053	SCft
	DGM 2	17,892	Scft
	DGM 3	17,264	SCft
TOTAL TUNNEL VOLUME :		33410	

SAMPLE RATIOS

Sample Train 1:	1850,631
Sample Train 2:	1867,256

Paticulate concentration

Sample Train 1	**0,000105**	g/dscf
Sample Train 2	**0,000101**	g/dscf
Room	**0,000006**	g/dscf

TOTAL EMISSIONS

Sample Train 1	**3,32**	g
Sample Train 2	**3,17**	g

EMISSION RATES

Sample Train 1	**2,03**	g/hr
Sample Train 2	**1,94**	g/hr
1st hour emission rate	**2,41**	g/hr

	Train 1	Train 2
Cs	0,0001052	0,000100602

RESULTS

Average emission rate: 2,0 g/hr

Burn Rate : 2,238 Dry kg/hr

BAROMETRIC PRESSURE

Average:	29,869584	in Hg
Start:	29,943409	in Hg
End:	29,795759	in Hg

DGM CONTROLLER VALUES

DGM 1	Final:	11964,376	Cuft
	Initial:	11945,607	Cuft
DGM 2	Final:	3539,143	Cuft
	Initial:	3520,533	Cuft
DGM #3	Final:	8335,219	Cuft
	Initial:	8317,705	Cuft

TEMPERATURES

DGM 1	531,729	°R
DGM 2	534,628	°R

CALIBRATION FACTORS

DGM 1	1,0019
DGM 2	1,0014
DGM #3	0,9900

TUNNEL FLOW RATE: 340,914 Dscfm

PARTICULATE CATCH

Total Sample Train 1:	1,90	mg
Total Sample Train 2:	1,80	mg
Total Sample Train 1 1st hour:	1,30	mg

DEVIATION: 2,39%

Manufacturer: HEARTHSTONE
Model: GM 40

Run: 1
Project #: PI 20247
Test Duration: 98 min

	HHV	LHV
Eff	70,73%	76,44%
Comb Eff	99,50%	99,50%
HT Eff	71,08%	76,83%
Output	30 131	kJ/h
Burn Rate	2,15	kg/h
Grams CO	19	g
Input	42 601	kJ/h
MC wet	17,43	

Note: In the “Input data”, "Calc. % O_2", "Fuel Properties", and “Mass Balance” columns, [e], [d], [g], [a]. [b], [c], [h], [u], [w], [j], and [k] refer to their respective variables in Clauses 13.7.3

	Ultimate CO_2
$CO_{2\text{-}ult}$	19,64
	F_0
	1,062

Overall Heating Efficiency:	70,73%
Combustion Efficiency:	99,50%
Heat Transfer Efficiency:	71,08%

Air Fuel Ratio (A/F)	
Dry Molecular Weight (M_d)	29,94
Dry Moles Exhaust Gas (N_r):	410,68
Air Fuel Ratio (A/F)	11,79

Heat Output:	28 583	Btu/h	30 131	kJ/h
Heat Input:	40 412	Btu/h	42 601	kJ/h
Burn Duration:	1,63	h		
Burn Rate:	4,74	lb/h	2,150	kg/h
Stack Temp:	524,8	Deg. F	273,8	Deg. C

POLYTESTS
TESTING THROUGH YOUR REALITY

Date: 2021-01-19 Manufacturer: Hearthstone Model: GM 40

Project #: PT 20247 Run: 2 Tech: MM Reviewer: NP

- Kindling 2.5 LBS start fire
- Fan on (low)
- By pass open.
- At 0 8 LBS insert preload
- After 2 min close Door
- At 10 LBS close by pass
- At 6 LBS close air inlet
- At 2 1 LBS open door rack coal bed and close Door

After 2 min insert load

- close Door immediately
- At 5 min close air inlet

TEST LOAD CONFIGURATION

POLYTESTS
TESTING THROUGH YOUR REALITY

PRE / POST CHECKS

Date: 2021-01-19 Manufacturer: Hearthstone Model: GM 40

Project #: pt 20247 Run: 2 Tech: MM Reviewer: DP

Moisture Meter Calibration Check:

Equipment #	Time	12%	22%
EM-191	7:00	ok	ok

Pre-Test **Post-Test**

Facility Conditions:

	Pre-Test	Post-Test
Air Velocity from less than 2 feet	0 (max50 Fpm)	0 (max50 Fpm)
Smoke Capture Check (tunnel velocity)	ok	NA
Picture (4 sides)	ok	ok

Wood Heater Conditions:

Date Wood Heater Stack Cleaned	2021-01-18
Date Dilution Tunnel Cleaned	2021-01-18
Induced Draft Check (max 0.005 H2O)	ok
Traverse before ignition	ok
Flow Rate 140 cfm ±10%	ok

Temperature System:

Ambient (65°-90°F)	ok	°F
Wood Heater Surface (±125°F)	ok	°F

Proportional Checks:

Thermocouple check	ok
Pitot Clean	ok
Pitot verification	ok

Sampling Train ID Numbers:

	Train 1st hour	Train 1	Train 2
Probe	004	12	39
Filter Front	940	942	944
Filter Back	941	943	945
Filter Thermocouple	81	11	12
Filter (<90°F)	ok	ok	ok

POLYTESTS
TESTING THROUGH YOUR REALITY

SAMPLING EQUIPMENT CHECK OUT

Date: 2021-01-19 Manufacturer: Hearthstone Model: GM 40

Project #: pt 20247 Run: 2 Tech: MM Reviewer: DP

Leakage Checks Tunnel Samplers

	System 1st hour		System 1		System 2	
Unplugged Flow Rate = .25cfm	Pre-Test ASTM (-15) CSA B415 (-5)	Post-Test (max test)	Pre-Test ASTM (-15) CSA B415 (-5)	Post-Test (Max test)	Pre-Test ASTM (-15) CSA B415 (-5)	Post-Test (Max test)
Vacuum (inches Hg.)	-15	-15	-15	-15	-15	-15
Final 1minute DGM (Liter)	338795.99	339775.40	338796.28	339775.65	100221.78	101193.80
Initial 1minute DGM (Liter)	338795.82	339775.35	338796.28	339775.55	100221.78	101193.80
Change © (Liter)	0.17	0.05	Ø	0.10	Ø	Ø
Allowable leakage .04 x Sample rate or 0.28Lpm CSA B415 (0.56)						
Check OK	ok	ok	ok	ok	ok	ok

Leakage Checks Flue Gas Sampler

Plugged Probe	Pre Test	Post Test
Vacuum (inches Hg.)	-5	-5
Rotometer Reading (mml/min.)	0	0
Flow Rate (lpm)	1.5	1.5
Allowable (.02 x Sample Rate)	30	30
Check OK	ok	ok

Leakage Checks Pitot

Plugged Probe	Pre Test 3 H2o static	Pre Test 0.4-0.5 H2o velocity	Post Test 3 H2o Static	Post Test 0.4-0.5 H2o velocity
Vacuum (inches Hg.)	3	.4	3	.4
Check OK (no change after 15 sec.)	ok	ok	ok	ok

POLYTESTS
TESTING THROUGH YOUR REALITY

PRE-TEST SCALE AUDIT

Date: 2021-01-19 Manufacturer: Hearthstone Model: GM 40
Project #: PI 20247 Run: 2 Tech: MM Reviewer: [illegible]

Scale Type	Audit		Measured Weight
	Equipment #	Weight	
Platform	EM-090	44 lbs, Class F	44 lbs
Wood	EM-090	44 lbs, Class F	44 lbs
Analytical	EM-128	100 mg, Class S	100 mg
Analytical	EM-129	200 g, Class S	200 g

LIMITS OF WEIGHT RANGES

ANALYTICAL SCALE: ..... 50%-150% of dry filter weight, ± 0.1 mg
PLATFORM SCALE.....20%-80% of ideal test load weight, ± 0.1 lbs or 1%
WOOD SCALE.....20%-80% of ideal test load weight, ± 0.01 lbs or 1%

POLYTESTS
TESTING THROUGH YOUR REALITY

CONTINUOUS ANALYZERS

Date: 2021-01-19 Manufacturer: Hearthstone Model: GM 40

Project #: pt 20247 Run: 2 Tech: M M Reviewer: [illegible]

FOR TUNNELS < 12 in

Barometric pressure (P_{bar}) 1007 (KPa.) Static pressure (P_q) 0.18 (inches w.c.)
Inside diameter: Port A _____ Port B _____.
Tunnel cross sectional area: .1963Ft^2
Pitot tube type: Standard

Traverse Point	Position (inches)			Velocity Head Δ_p (inches H_2O)	Tunnel Temperature (°F)
	6 po	7 po	8 po		
A- Centroid	3.00	3.50	4	0.077	71.96
B - Centroid	3.00	3.50	4	0.076	71.82
A-1	0.40	0.50	0.50	0.063	71.96
A-2	1.50	1.75	2	0.068	71.94
A-3	4.50	5.25	6	0.066	71.94
A-4	5.60	6.5	7.5	0.062	71.88
B-1	0.40	0.50	0.50	0.062	71.82
B-2	1.50	1.75	2	0.072	71.79
B-3	4.50	5.25	6	0.079	71.79
B-4	5.60	6.5	7.5	0.063	71.64
				AVERAGE	

$$v_s = K_p C_p (\sqrt{\Delta p})_{avg} \sqrt{\frac{(T_s)_{avg}}{P_s M_s}}$$

Where,
C_p = pitot tube coefficient, dimension less = 0.99 for standard pitot.
Δ_p = manometer reading (inches H_2O)
T_s = average absolute dilution tunnel temperature (°F + 460)
P_s = absolute dilution tunnel gas pressure or $P_{bar} + P_{qg}$
P_q = static pressure $\frac{\text{in. } H_2O}{\{13.6\}}$
M_s = 28.56, wet molecular weight of stack gas (alternatively, it may be measured)
K_p = 85.49 pitot tube constant, (conversion factor for English units)

_$\Delta_p$avg. = average of the square roots of the velocity heads (Δ_p) measured at each traverse point.

POLYTESTS
TESTING THROUGH YOUR REALITY

CONTINUOUS ANALYZERS

Date: 2021-01-19 Manufacturer: Hearthstone Model: GM 40

Project #: pt 20247 Run: 2 Tech: MM Reviewer: DP

Pre-Test (Adjust and Record)

	ZERO		SPAN		CAL. (Record Only)	
CO	0	0	2.983	3.000	1.009	1.000
Tolerance CO	0	+/- 0.02		+/- 0.15	0.009	+/- 0.05
CO_2	0	0	18.15	18.00	9.79	10.00
Tolerance CO2	0	+/- 0.02		+/- 0.5	0.21	+/- 0.5
O_2 informative CSA B415 calculated value	na	na	na	na	na	na
	Actual	Should Be	Actual	Should Be	Actual	Should Be

Post Test (Record Only)

	Zero	Span	Cal.	Zero Drift	Limit	Span Drift	Limit	Cal. Drift	Limit	OK?	Not OK*
CO	0	2.990	1.004	0	0.02	0.007	0.15	0.005	0.05	✓	
CO_2	0	18.09	9.84	0	0.02	0.06	0.5	0.05	0.5	✓	

POLYTESTS
TESTING THROUGH YOUR REALITY

TEST DATA LOG

Date: 2021-01-19 Manufacturer: Hearthstone Model: GM 40
Project #: pt 20247 Run: 2 Tech: M M Reviewer: DP

RAW DRY GAS METER READINGS

	System 1	System 2	Blanck
Final (Liter)	339774,32	101191,68	236949,75
Initial (Liter)	338797,38	100222,72	236027,10

AMBIENT CONDITIONS

	Before	After
Barometer (kPa):	100,7	100,8
Dry Bulb (F):	70,1	71,8
Humidity (%):	27,8	25,4

Flow Meter

	Start	End
Flow meter reading	N.A	NA

Flow Meter Verification

	Before	After
Flow meter Check (liters)	N.A	N.A
Scale Weight (Kg)	N.A	N.A

POLYTESTS
TESTING THROUGH YOUR REALITY

FUEL DATA

Date: 2021-01-19 Manufacturer: Hearthstone Model: GM 40

Project #: PI 20247 Run: 2 Tech: MM Reviewer: DP

FUEL DESCRIPTION:

Type of wood:

PRE-TEST LOAD

Piece Size	Weight	Meter Moisture Content (% dry)*				
1 1/2 x 3 1/2 x 8 in.	0.76 lbs.	21.1	21.0	21.3	21.3	21.0
1 1/2 x 3 1/2 x 8 in.	0.98 lbs.	21.1	21.6	21.3	21.3	21.3
1 1/2 x 3 1/2 x 8 in.	0.74 lbs.	23.0	22.9	22.8	22.3	22.6
1 1/2 x 3 1/2 x 8 in.	0.74 lbs.	22.6	22.7	22.8	22.7	22.7
1 1/2 x 3 1/2 x 8 in.	0.72 lbs.	21.9	22.0	21.9	21.8	21.8
1 1/2 x 3 1/2 x 8 in.	0.78 lbs.	22.0	22.1	22.8	22.6	22.6
1 1/2 x 3 1/2 x 8 in.	0.76 lbs.	21.1	21.3	21.2	21.3	21.6
1 1/2 x 3 1/2 x 8 in.	0.72 lbs.	22.0	22.1	22.3	22.1	22.0
1 1/2 x 3 1/2 x 8 in.	0.72 lbs.	19.9	19.6	19.3	19.4	19.4
1 1/2 x 3 1/2 x 8 in.	0.72 lbs.	20.0	20.3	20.4	20.6	20.4
1 1/2 x 3 1/2 x 8 in.	0.96 lbs.	20.3	20.6	20.4	20.5	20.3
1 1/2 x 3 1/2 x 8 in.	0.94 lbs.	21.2	21.3	21.4	21.3	21.6
1 1/2 x 3 1/2 x 8 in.	0.78 lbs.	21.0	21.1	21.2	21.3	21.2
1 1/2 x 3 1/2 x 8 in.	~~0.98~~ 0.74 lbs.	20.0	20.1	20.3	20.4	20.3
x x in.	lbs.					
x x in.	lbs.					
x x in.	lbs.					
x x in.	lbs.					
x x in.	lbs.					
x x in.	lbs.					
x x in.	lbs.					
x x in.	lbs.					
x x in.	lbs.					

TEST LOAD WEIGHT: 11.06 lbs

POLYTESTS
TESTING THROUGH YOUR REALITY

FUEL DATA

Date: 2024-01-19 Manufacturer: Hearthstone Model: GM 40

Project #: pT 20247 Run: 2 Tech: MM Reviewer: DP

FUEL DESCRIPTION:

Type of wood :

TEST LOAD

Piece Size	Weight	Meter Moisture Content (% dry)*				
1 1/2 x 3 1/2 x 13.5 in.	1 66 lbs.	21.4	21.8	22.0	21.9	21.5
1 1/2 x 3 1/2 x 13.5 in.	1 54 lbs.	20.8	20.9	20.7	20.7	21.0
1 1/2 x 3 1/2 x 13.5 in.	1 54 lbs.	22.1	22.0	22.4	21.9	21.9
1 1/2 x 3 1/2 x 13.5 in.	1 54 lbs.	20.9	21.0	20.8	20.8	20.7
1 1/2 x 3 1/2 x 13.5 in.	1 58 lbs.	21.0	20.4	20.3	20.6	20.9
x x in.	lbs.					
1 1/2 x 3/4 x 5 in.	0 120 lbs.			20.6		
1 1/2 x 3/4 x 5 in.	0 100 lbs.			20.9		
1 1/2 x 3/4 x 5 in.	0 120 lbs.			20.8		
1 1/2 x 3/4 x 5 in.	0 120 lbs.			20.9		
1 1/2 x 3/4 x 5 in.	0 120 lbs.			20.0		
1 1/2 x 3/4 x 5 in.	0 120 lbs.			20.0		
1 1/2 x 3/4 x 5 in.	0 140 lbs.			19.9		
1 1/2 x 3/4 x 5 in.	0 100 lbs.			19.8		
1 1/2 x 3/4 x 5 in.	0 100 lbs.			19.4		
1 1/2 x 3/4 x 5 in.	0 140 lbs.			19.3		
1 1/2 x 3/4 x 5 in.	0 100 lbs.			19.9		
1 1/2 x 3/4 x 5 in.	0 100 lbs.			20.0		
1 1/2 x 3/4 x 5 in.	0 120 lbs.			20.0		
1 1/2 x 3/4 x 5 in.	0 120 lbs.			20.3		
1 1/2 x 3/4 x 5 in.	0 120 lbs.			20.4		
1 1/2 x 3/4 x 5 in.	0 100 lbs.			20.8		
x x in.	lbs.					
x x in.	lbs.					
x x in.	lbs.					
x x in.	lbs.					
x x in.	lbs.					

TEST LOAD WEIGHT: ~~9.66~~ 9.70 kg lbs Min 20%: 1.93 Max 25%: 2.40

POLYTESTS
TESTING THROUGH YOUR REALITY

DILUTION TUNNEL PARTICULATE SAMPLER DATA

Date: 2021-01-18 Manufacturer: Hearthstone Model: GM 40

Project #: PI 20247 Run: 2 Tech: MM Reviewer: [illegible]

		SYSTEM 1 – 1st hour				SYSTEM 1				
Pre-test Weight Record		Probe & Housing Number	Front Filter Number	Back Filter Number	gaskets	Probe & Housing Number	Front Filter Number	Back Filter Number	gaskets	Blanck
Date	Time	004	940	941	34	12	942	943	40	946
2021-01-18	17:00	61,3995	0,1251	0,1291	35,0748	94,5378	0,1305	0,1252	35,1603	0,1303
2021-01-19	9:00	61,3994	0,1250	0,1290	35,0747	94,5377	0,1306	0,1253	35,1604	0,1304

		SYSTEM 1 – 1st hour				SYSTEM 1				
Post-test Weight Record		Probe & Housing Number	Front Filter Number	Back Filter Number	gaskets	Probe & Housing Number	Front Filter Number	Back Filter Number	gaskets	Blanck
Date	Time	004	940	941	34	12	942	943	40	946
2021-01-19	15:00	61,4000	0,1260	0,1288	35,0761	94,5385	0,1306	0,1254	35,1611	0,1305
2021-01-21	8:00	61,3995	0,1254	0,1285	35,0758	94,5377	0,1304	0,1252	35,1609	0,1304
2021-01-22	8:00	61,3995	0,1254	0,1285	35,0758	94,5377	0,1304	0,1252	35,1609	0,1304

POLYTESTS
TESTING THROUGH YOUR REALITY

DILUTION TUNNEL PARTICULATE SAMPLER DATA

Date: 2021-01-18 Manufacturer: Hearthstone Model: GM 40

Project #: PI 20247 Run: 2 Tech: MM Reviewer: SO

Pre-test Weight Record		SYSTEM 2			
		Probe & Housing Number	Front Filter Number	Back Filter Number	gaskets
Date	Time	39	944	945	45
2021-01-18	17:00	110,2771	0,1302	0,1300	34,2555
2021-01-19	9:00	110,2770	0,1303	0,1299	34,2554

Post-test Weight Record		SYSTEM 2			
		Probe & Housing Number	Front Filter Number	Back Filter Number	gaskets
Date	Time	39	944	945	45
2021-01-19	15:00	110,2780	0,1308	0,1299	34,2565
2021-01-21	8:00	110,2772 ~~110,2772~~	0,1304	0,1299	34,2563
2021-01-22	8:00	110,2772	0,1304	0,1299	34,2563

Paramètres

Tous les facteurs de corrections et autres paramètres qui peuvent être modifiés par l'utilisateur du fichier sont regroupés ici.

Code verrouillage:	HEA

Description du test

Test standard	EPA	
Run #	2	
Date	19-01-2021	
Technicien	M.M	
Project #	PI 20247	

Description de l'unité

Manufacturier	HEARTHSTONE	
Modèle	GM 40	
Combustion system	Cat	
Appliance type	WOOD STOVE	
Firebox volume	1,31	cu ft.
Appliance weight empty	N.A	lbs
Appliance weight full	N.A	lbs

Paramètres du test

Logging time	1	min
Manufacturer's rated heat output	N.A	BTU/h Donnée fournie par le manfacturier
Targeted category	4	
Targeted output	N.A	BTU/h
Cp steel	N.A	BTU/lb-°F

Échantillonnage

Blank sampling rate	0,20	cuft/min
Internal probe diameter	0,18	in.
Calibration Factor (DGM #1):	1,002	Dimensionless
Equipment number (DGM #1):	EM 178	
Calibration Factor (DGM #2):	1,001	Dimensionless
Equipment number (DGM #2):	EM 318	
Calibration Factor (DGM #3):	0,990	
Equipment number (DGM #3):	EM 179	Dimensionless

Tunnel

Targeted tunnel flow rate	350	scfm
Tunnel diameter	8	in.
Molecular weight	29	29 as per ASTM E2515
Pitot tube type	Standard	
Pitot tube coefficient	0,99	Dimensionless

Project nu.	PI 20247
Date	19-01-2021
Technicien	M.M

Fuel data

Fuel type	Dimension	
Fuel specie	D. Fir	
HHV	19810,0	kJ/kg
%C	48,7	
%H	6,9	
%O	43,9	
%Ash	0,5	
HHV	8519,2	Btu/lb
LHV	7451,0	Btu/lb

Default Fuel Values

	D. Fir	Oak/Maple
HHV	19 810	19 887
%C	48,73	50
%H	6,87	6,6
%O	43,9	42,9
%Ash	0,5	0,5
HHV (Btu/lb)	8519	8552
LHV (Btu/lb)	7451	7480

	Start	End
Barometer (kPa):	100,7	100,8
Barometer (in.Hg):	29,736699	29,7662288
Dry Bulb (F):	70,1	71,8
Humidity (%):	27,8	25,4
Air velocity (ft/min)	0	0

DGM #1	Final:	11999,017	cuft	Final:	339774,320	Liter
	Initial:	11964,517	cuft	Initial:	338797,380	Liter
DGM #2	Final:	3573,551	cuft	Final:	101191,680	Liter
	Initial:	3539,332	cuft	Initial:	100222,720	Liter
DGM room	Final:	8367,802	cuft	Final:	236949,750	Liter
	Initial:	8335,219	cuft	Initial:	236027,100	Liter

Numéro de la ligne dans "Raw data" à partir duquel les données du VRAI test commencent: 143

Autres données à rentrer: dans preload data, load data, traverse et filter set weight

Project nu.	PI 20247
Date	19-01-2021
Technicien	M.M

FUEL LOAD DATA SHEET, CSA B415

Test Load Weight:

Lower	Ideal	Upper
8,3	9,2	10,1

* For boilers, a loading density factor of 10 lb/ft3 is applied

Load Volume: 0,31 cu. ft

Loading Density: 7,4 lbs./ft3

Number of Spaces: 16

Spacer weight: lbs

Load Density (wet): 31,4 lbs./ft3

Dry Wood Density: 25,9 lbs./ft3

Piece Size (in): Thick	Wide	Length	Weight lbs	Meter Moisture Content Dry Uncorrected %					Ave. MC x Weight	Volume Cubic Inches	Ave. MC %
1,5	3,5	13,5	1,66	21,40	21,80	22,00	21,90	21,50	36,0552	70,88	21,7
1,5	3,5	13,5	1,54	20,80	20,90	20,70	20,70	21,00	32,0628	70,88	20,8
1,5	3,5	13,5	1,54	22,10	22,00	22,40	21,90	21,90	33,9724	70,88	22,1
1,5	3,5	13,5	1,54	20,90	21,00	20,80	20,80	20,70	32,0936	70,88	20,8
1,5	3,5	13,5	1,58	21,00	20,40	20,30	20,60	20,90	32,6112	70,88	20,6
1,5	0,75	5	0,12			20,60			2,472	5,63	20,6
1,5	0,75	5	0,10			20,90			2,09	5,63	20,9
1,5	0,75	5	0,12			20,80			2,496	5,63	20,8
1,5	0,75	5	0,12			20,90			2,508	5,63	20,9
1,5	0,75	5	0,12			20,00			2,4	5,63	20,0
1,5	0,75	5	0,12			20,00			2,4	5,63	20,0
1,5	0,75	5	0,14			19,90			2,786	5,63	19,9
1,5	0,75	5	0,10			19,80			1,98	5,63	19,8
1,5	0,75	5	0,10			19,40			1,94	5,63	19,4
1,5	0,75	5	0,14			19,30			2,702	5,63	19,3
1,5	0,75	5	0,10			19,90			1,99	5,63	19,9
1,5	0,75	5	0,10			20,00			2	5,63	20,0
1,5	0,75	5	0,12			20,00			2,4	5,63	20,0
1,5	0,75	5	0,12			20,30			2,436	5,63	20,3
1,5	0,75	5	0,12			20,40			2,448	5,63	20,4
1,5	0,75	5	0,1			20,80			2,08	5,63	20,8
										0,00	
										0,00	
										0,00	
										0,00	
										0,00	
										0,00	
										0,00	
										0,00	
										0,00	
								SUM MCx	203,9232		20,4 %

Test Load Weight: 9,70 lbs.

Dry Weight: 3,64 kg.

Average Moisture Content: %

Dry: 21,02 Dry(EPA) 21,02

Dry(B415 21,02

21,02

Must be 19-25

Wet: 17,37

must be 15,2-22

Coal Bed Range: 1,9 lbs. to 2,4 lbs.

TEST CHARGE:

Coal bed weight: 2 lbs.

Project nu.	PI 20247
Date	19-01-2021
Technicien	M.M

Filter set weight

	System 1 (g) 1st hour				System 1 (g)				System 2 (g)				Ambient blank (g)	Date	Heure
	probe	front	back	gasket	probe	front	back	gasket	probe	front	back	gasket	Filter		
Number	4	940	941	34	12	942	943	40	39	944	945	45	946		
Before (1)															
Before (2)															
Before (3)															
Before (4)															
Before (5)	61,3995	0,1251	0,1291	35,0748	94,5378	0,1305	0,1252	35,1603	110,2771	0,1302	0,1300	34,2555	0,1303	2021-01-18	17:00
Before (6)	61,3994	0,1250	0,1290	35,0747	94,5377	0,1306	0,1253	35,1604	110,2770	0,1303	0,1299	34,2554	0,1304	2021-01-19	09:00
After (1)	61,4000	0,1260	0,1288	35,0761	94,5385	0,1306	0,1254	35,1611	110,2780	0,1308	0,1299	34,2565	0,1305	2021-01-19	15:00
After (2)	61,3995	0,1254	0,1285	35,0758	94,5377	0,1304	0,1252	35,1609	110,2772	0,1304	0,1299	34,2563	0,1304	2021-01-21	08:00
After (3)	61,3995	0,1254	0,1285	35,0758	94,5377	0,1304	0,1252	35,1609	110,2772	0,1304	0,1299	34,2563	0,1304	2021-01-22	08:00
After (4)															
After (5)															
After (6)	61,3995	0,1254	0,1285	35,0758	94,5377	0,1304	0,1252	35,1609	110,2772	0,1304	0,1299	34,2563	0,1304	2021-01-22	08:00

Difference	0,0001	0,0004	-0,0005	0,0011	0,0000	-0,0002	-0,0001	0,0005	0,0002	0,0001	0,0000	0,0009	0,0000
Total (mg)		1,1				1,3				1,2			0
Total ajusté (mg)		**1,10**				**1,30**				**1,20**			

Project nu.	PI 20247
Date	19-01-2021
Technicien	mm

		Average	0,25	9,77	#DIV/0!	301,51	68,97	81,74	463,20	254,22	377,80	396,72	366,72	744,80	0,18	70,59	71,34	72,95	0,18	73,10	76,34	73,30	0,07	0,01	
*		*	*	*	*	*1	*2	*3	*4	*5	*6	*7	*8	*	Mass flow 1	DGM 1	DGM 1	Filter 1	Mass flow 2	DGM 2	DGM 2	Filter 2	Tunnel Veloc	Flue draft	Change in
Elapsed		Weight				Flue	Room	Tunnel	Unit	Unit	Unit	Unit	Unit	Catalyst	Reading	Inlet T	Outlet T	Temp	Reading	Inlet T	Outlet T	Temp	Pressure	Pressure	Surface
Time	Raw data row	Remaining	CO	CO_2	O_2	Gas	Temp	Dry Bulb	Top	Back	R.Side	L.Side	Bottom	up									in wc	in wc	Temp.
min		lbs	%	%	%	°F	°F	°F	°F	°F	°F	°F	°F	°F	cuft/min	oF	oF	oF	cuft/min	oF	oF	oF	in wc	in wc	°F
0,00	143,00	9,7	0,1	3,6	0,0	314,7	68,8	105,2	433,2	269,2	365,5	405,2	447,5	513,8	0,18	69,91	69,83	74,28	0,18	69,58	70,66	74,39	0,07	0,01	0
1,0	144,0	9,6	0,1	1,0	0,0	329,0	68,9	87,8	423,9	268,7	364,0	404,1	446,4	533,3	0,18	70,05	69,83	74,19	0,18	69,72	70,83	74,26	0,08	0,01	-2,726733
2,0	145,0	9,6	0,0	2,4	0,0	347,7	68,8	86,8	417,1	267,7	362,6	402,4	445,6	579,2	0,18	70,01	69,84	74,14	0,18	69,79	71,00	74,23	0,08	0,01	-5,036877
3,0	146,0	9,5	0,0	2,6	0,0	356,8	68,8	87,0	411,4	266,7	360,3	400,2	444,5	584,8	0,18	69,99	69,88	74,08	0,18	69,88	71,17	74,15	0,08	0,01	-7,500946
4,0	147,0	9,4	0,0	2,8	0,0	361,7	69,1	87,1	407,4	265,4	357,6	397,3	441,5	578,7	0,18	70,06	69,90	74,04	0,18	70,08	71,29	74,09	0,08	0,01	-10,27047
5,0	148,0	9,4	0,0	3,9	0,0	319,1	69,1	81,8	402,7	263,5	355,7	394,1	440,6	599,5	0,18	70,08	69,91	74,00	0,18	70,18	71,45	74,04	0,08	0,01	-12,77867
6,0	149,0	9,4	0,0	2,7	0,0	295,0	69,1	81,3	396,3	261,9	352,1	390,8	439,2	595,4	0,18	70,11	69,97	73,90	0,18	70,38	71,62	74,00	0,08	0,01	-16,05688
7,0	150,0	9,3	0,0	2,5	0,0	282,1	69,1	80,9	391,7	259,9	349,6	387,0	436,7	578,4	0,18	70,07	69,98	73,83	0,18	70,44	71,76	73,93	0,08	0,01	-19,12511
8,0	151,0	9,3	0,0	2,5	0,0	273,8	69,0	80,8	385,7	257,6	347,2	383,2	433,8	564,9	0,18	70,09	70,00	73,81	0,18	70,56	71,92	73,90	0,08	0,01	-22,59523
9,0	152,0	9,3	0,0	2,5	0,0	267,8	69,1	79,2	381,3	254,8	344,4	379,0	431,0	556,5	0,18	70,06	70,03	73,74	0,18	70,69	72,09	73,84	0,08	0,01	-26,04333
10,0	153,0	9,2	0,0	2,8	0,0	265,3	69,0	79,7	377,2	252,1	341,1	375,3	427,4	558,0	0,18	70,15	70,07	73,69	0,18	70,84	72,27	73,80	0,07	0,01	-29,49953
11,0	154,0	9,1	0,0	4,8	0,0	264,4	69,0	80,2	379,0	249,6	337,9	371,4	424,3	572,7	0,18	70,07	70,09	73,67	0,18	70,90	72,45	73,79	0,08	0,01	-31,65968
12,0	155,0	9,1	0,1	6,3	0,0	264,1	68,7	80,0	379,3	246,9	335,2	367,4	420,3	596,0	0,18	69,99	70,09	73,64	0,18	70,95	72,56	73,75	0,07	0,01	-34,30992
13,0	156,0	9,1	0,1	4,8	0,0	263,1	68,7	79,7	377,7	244,1	330,9	363,5	417,0	594,6	0,18	69,94	70,14	73,58	0,18	71,01	72,66	73,69	0,08	0,01	-37,4792
14,0	157,0	9,0	0,1	3,4	0,0	261,5	68,6	79,6	373,4	241,2	328,4	359,7	412,8	556,9	0,18	69,95	70,19	73,54	0,18	71,10	72,78	73,63	0,08	0,01	-41,02021
15,0	158,0	9,0	0,1	3,3	0,0	258,6	68,6	79,5	369,3	238,4	326,1	356,1	409,3	538,1	0,18	69,94	70,20	73,49	0,18	71,20	72,90	73,61	0,08	0,01	-44,30211
16,0	159,0	8,9	0,1	3,4	0,0	257,8	68,7	79,3	366,2	235,5	323,2	352,6	406,1	530,2	0,18	69,96	70,23	73,45	0,18	71,35	72,99	73,57	0,08	0,01	-47,41339
17,0	160,0	8,8	0,1	5,7	0,0	261,5	68,6	80,0	364,8	232,8	320,1	349,0	402,1	553,9	0,18	69,98	70,34	73,36	0,18	71,49	73,08	73,52	0,08	0,01	-50,37898
18,0	161,0	8,7	0,7	10,4	0,0	272,2	68,5	80,0	368,7	230,1	315,6	345,5	399,2	645,7	0,18	69,99	70,37	73,32	0,18	71,60	73,15	73,46	0,08	0,01	-52,29452
19,0	162,0	8,6	0,3	11,1	0,0	280,9	68,6	80,1	377,3	227,8	314,0	342,5	395,0	681,6	0,18	70,01	70,42	73,26	0,18	71,66	73,22	73,41	0,08	0,01	-52,81605
20,0	163,0	8,5	0,2	9,7	0,0	285,7	68,4	80,4	384,5	225,5	312,0	339,9	391,2	667,3	0,18	70,00	70,48	73,18	0,18	71,71	73,34	73,35	0,07	0,01	-53,52444
21,0	164,0	8,4	0,2	7,8	0,0	288,6	68,5	80,4	388,0	223,2	310,3	337,6	387,6	637,1	0,18	69,93	70,45	73,09	0,18	71,73	73,46	73,29	0,08	0,01	-54,78029
22,0	165,0	8,3	0,2	7,4	0,0	290,3	68,4	80,4	388,3	221,6	308,5	335,5	384,3	627,2	0,18	69,92	70,46	73,01	0,18	71,80	73,53	73,22	0,07	0,01	-56,48052
23,0	166,0	8,2	0,1	6,5	0,0	291,7	68,4	80,5	390,5	219,7	307,0	333,6	381,3	627,2	0,18	69,91	70,46	72,97	0,18	71,87	73,63	73,18	0,07	0,01	-57,71708
24,0	167,0	8,1	0,1	7,6	0,0	294,2	68,2	81,0	393,0	217,8	305,2	331,7	378,2	626,7	0,18	69,91	70,53	72,96	0,18	71,98	73,69	73,13	0,07	0,01	-58,92184
25,0	168,0	8,0	0,3	9,2	0,0	302,9	67,7	81,3	399,0	216,3	303,7	329,8	374,9	657,3	0,18	69,88	70,62	72,93	0,18	71,98	73,78	73,06	0,07	0,01	-59,36782
26,0	169,0	7,8	0,3	13,4	0,0	314,0	67,6	81,3	408,6	213,9	302,8	328,1	372,4	770,4	0,18	69,58	70,55	72,90	0,18	71,82	73,84	73,00	0,08	0,01	-58,96531
27,0	170,0	7,7	0,2	14,1	0,0	325,9	67,7	81,8	420,3	212,2	301,9	326,6	369,5	836,9	0,18	69,34	70,60	72,86	0,18	71,65	73,89	72,97	0,07	0,01	-58,01569
28,0	171,0	7,6	0,2	13,9	0,0	335,3	67,6	82,4	431,7	211,1	301,4	325,5	366,7	840,4	0,18	69,31	70,63	72,85	0,18	71,66	73,93	72,92	0,08	0,01	-56,80638
29,0	172,0	7,4	0,8	13,7	0,0	343,1	67,8	82,6	441,9	209,9	300,9	324,9	364,3	830,8	0,18	69,39	70,61	72,83	0,18	71,77	74,01	72,87	0,08	0,01	-55,74528
30,0	173,0	7,3	0,7	13,7	0,0	349,8	67,9	82,9	450,7	209,4	300,8	324,6	361,5	831,8	0,18	69,50	70,73	72,84	0,18	71,90	74,10	72,84	0,08	0,01	-54,70241
31,0	174,0	7,1	0,6	14,4	0,0	354,9	68,0	83,1	458,1	209,1	300,9	324,6	358,9	827,7	0,18	69,65	70,76	72,83	0,18	72,04	74,16	72,81	0,08	0,02	-53,78745
32,0	175,0	7,0	0,5	14,6	0,0	361,7	68,1	83,4	466,5	208,8	301,2	325,0	356,3	848,5	0,18	69,78	70,78	72,85	0,18	72,17	74,30	72,78	0,08	0,02	-52,57314
33,0	176,0	6,8	0,9	14,9	0,0	366,6	68,1	83,6	476,3	208,9	301,8	325,7	354,0	858,4	0,18	69,91	70,81	72,83	0,18	72,34	74,36	72,76	0,08	0,02	-50,78878
34,0	177,0	6,7	0,8	15,0	0,0	370,2	68,3	84,3	486,2	209,3	302,3	326,5	351,5	869,1	0,18	69,96	70,83	72,87	0,18	72,41	74,42	72,77	0,07	0,02	-48,96797
35,0	178,0	6,5	0,8	15,2	0,0	375,0	68,3	84,3	496,0	209,5	303,3	327,8	349,3	877,1	0,18	69,97	70,78	72,85	0,18	72,45	74,51	72,73	0,07	0,02	-46,9308
36,0	179,0	6,4	0,8	15,2	0,0	379,5	68,3	84,7	506,7	210,4	304,7	329,3	347,2	884,2	0,18	69,97	70,74	72,87	0,18	72,46	74,58	72,73	0,07	0,02	-44,46093
37,0	180,0	6,2	1,1	15,5	0,0	383,2	68,4	84,8	517,0	211,0	305,9	330,9	345,2	897,6	0,18	70,00	70,78	72,88	0,18	72,53	74,64	72,69	0,08	0,02	-42,11927
38,0	181,0	6,1	1,0	15,7	0,0	386,9	68,3	84,6	527,4	212,0	307,1	332,6	343,3	913,5	0,18	70,01	70,81	72,86	0,18	72,53	74,70	72,68	0,08	0,02	-39,63043
39,0	182,0	5,9	0,8	15,7	0,0	389,7	68,9	85,2	534,7	213,2	309,2	334,0	342,8	923,0	0,18	70,05	70,88	72,88	0,18	72,64	74,78	72,72	0,08	0,02	-37,33608
40,0	183,0	5,8	1,2	15,9	0,0	393,1	68,7	85,6	546,8	214,6	310,7	336,5	340,4	939,5	0,18	70,10	70,99	72,93	0,18	72,72	74,83	72,75	0,08	0,02	-34,31513
41,0	184,0	5,6	1,1	16,1	0,0	395,7	68,8	87,4	557,3	215,9	312,5	338,9	338,8	953,7	0,18	70,15	71,12	73,03	0,18	72,66	74,86	72,79	0,07	0,02	-31,44496
42,0	185,0	5,5	0,9	16,2	0,0	396,8	69,2	88,9	566,1	217,7	313,8	341,1	337,9	956,3	0,18	70,32	71,14	73,10	0,18	72,84	74,93	72,83	0,08	0,02	-28,81157
43,0	186,0	5,3	0,7	16,2	0,0	398,0	69,1	90,0	573,8	219,0	316,9	343,6	336,4	959,6	0,18	70,45	71,17	73,20	0,18	72,96	74,98	72,87	0,07	0,02	-26,15936
44,0	187,0	5,2	0,5	16,2	0,0	399,7	68,9	90,0	581,5	220,0	319,3	346,1	335,0	960,7	0,18	70,51	71,22	73,30	0,18	72,98	75,08	72,90	0,08	0,02	-23,72997
45,0	188,0	5,1	0,6	16,2	0,0	401,9	69,1	89,5	589,2	221,9	321,8	348,7	334,2	968,6	0,18	70,58	71,30	73,36	0,18	73,11	75,16	72,97	0,08	0,02	-20,97033
46,0	189,0	4,9	0,7	16,3	0,0	404,4	69,1	89,2	596,7	223,5	324,6	351,4	332,8	976,5	0,18	70,62	71,30	73,44	0,18	73,10	75,23	73,01	0,08	0,02	-18,30114
47,0	190,0	4,8	1,0	16,4	0,0	407,1	68,9	88,9	603,9	224,9	327,6	354,2	331,6	984,8	0,18	70,67	71,32	73,51	0,18	73,14	75,30	73,09	0,08	0,02	-15,65815
48,0	191,0	4,6	1,3	16,4	0,0	409,2	69,1	88,5	611,2	226,1	330,5	357,0	330,7	985,9	0,18	70,73	71,30	73,57	0,18	73,24	75,42	73,11	0,08	0,02	-12,99999
49,0	192,0	4,5	1,6	16,3	0,0	410,6	69,0	88,6	617,6	227,6	333,6	359,9	329,5	985,2	0,18	70,79	71,29	73,67	0,18	73,28	75,49	73,16	0,08	0,02	-10,43999
50,0	193,0	4,3	1,8	16,3	0,0	411,5	69,0	88,4	624,3	228,6	336,4	362,9	328,5	988,8	0,18	70,81	71,28	73,73	0,18	73,32	75,58	73,21	0,07	0,02	-7,963574
51,0	194,0	4,2	2,1	16,2	0,0	413,2	69,1	88,6	629,9	230,1	339,3	365,8	327,7	991,3	0,18	70,88	71,28	73,81	0,18	73,37	75,72	73,26	0,08	0,02	-5,558694
52,0	195,0	4,1	2,2	16,2	0,0	414,2	69,1	88,9	634,2	231,6	342,2	368,9	326,8	997,0	0,18	70,88	71,28	73,87	0,18	73,38	75,81	73,31	0,08	0,02	-3,390387
53,0	196,0	3,9	2,4	16,2	0,0	415,4	68,8	88,7	638,8	233,7	344,6	371,9	326,0	998,2	0,18	70,92	71,38	73,94	0,18	73,42	75,94	73,38	0,08	0,02	-1,095352
54,0	197,0	3,8	2,5	16,1	0,0	415,9	69,1	88,9	642,7	235,5	347,5	375,0	325,2	994,7	0,18	70,97	71,46	74,01	0,18	73,46	76,00	73,43	0,07	0,02	1,0455596
55,0	198,0	3,6	2,3	16,1	0,0	414,0	69,0	88,4	646,5	237,5	350,7	378,1	324,4	992,3	0,18	71,03	71,56	74,02	0,18	73,55	76,02	73,48	0,08	0,02	3,3480866
56,0	199,0	3,5	2,0	16,1	0,0	413,3	69,2	88,5	649,5	239,6	353,8	381,5	323,9	987,3	0,18	71,03	71,55	74,06	0,18	73,58	76,12	73,52	0,07	0,02	5,5463072
57,0	200,0	3,4	1,6	16,1	0,0	412,9	69,1	88,1	652,8	241,3	356,9	384,8	323,3	988,7	0,18	71,02	71,51	74,12	0,18	73,56	76,21	73,57	0,08	0,02	7,6862456
58,0	201,0	3,2	1,1	16,2	0,0	412,6	69,1	87,8	657,0	243,3	359,8	387,8	323,1	991,2	0,18	71,02	71,45	74,14	0,18	73,60	76,30	73,59	0,07	0,02	10,100388
59,0	202,0	3,1	0,7	16,2	0,0	412,6	69,3	87,5	659,5	245,3	362,7	390,4	323,0	993,8	0,18	71,06	71,50	71,58	0,18	73,61	76,42	73,66	0,07	0,02	12,051434
60,0	203,0	3,0	0,4	16,1	0,0	410,4	69,4	88,2	662,5	247,7	365,7	394,3	322,3	986,1	0,18	71,12	71,50	71,70	0,18	73,71	76,46	73,71	0,07	0,02	14,38569
61,0	204,0	2,9	0,2	16,0	0,0	408,6	69,6	87,7	665,5	249,3	369,3	397,5	322,2	978,2	0,18	71,11	71,51	71,80	0,18	73,70	76,53	73,76	0,07	0,02	16,658304
62,0	205,0	2,8	0,2	15,6	0,0	406,2	69,4	87,7	664,1	251,3	372,4	401,0	321,6	964,1	0,18	71,13	71,55	71,86	0,18	73,70	76,62	73,83	0,08	0,02	17,960797
63,0	206,0	2,7	0,1	15,0	0,0	402,4	69,8	87,5	662,9	252,9	375,7	404,2	321,1	953,4	0,18	71,15	71,52	71,94	0,18	73,74	76,69	73,89	0,08	0,02	19,236441
64,0	207,0	2,6	0,1	14,8	0,0	398,8	69,3	87,5	659,1	254,8	378,9	407,6	321,0	964,0	0,18	71,10	71,51	72,03	0,18	73,70	76,75	73,95	0,08	0,02	20,173914
65,0	208,0	2,6	0,2	14,7	0,0	396,4	69,3	86,9	655,6	256,8	381,9	410,9	320,8	963,6	0,18	71,07	71,47	72,10	0,18	73,70	76,76	73,98	0,07	0,02	21,096423
66,0	209,0	2,5	0,2	14,5	0,0	392,2	69,4	86,4	653,7	258,2	384,4	414,0	320,4	952,3	0,18	71,07	71,53	72,15	0,18	73,71	76,83	74,01	0,07	0,02	22,042059
67,0	210,0	2,4	0,1	14,1	0,0	388,3	69,4	86,7	651,9	260,1	387,5	417,4	320,3	931,5	0,18	71,09	71,54	72,23	0,18	73,73	76,81	74,04	0,08	0,02	23,317438
68,0	211,0	2,3	0,0	14,3	0,0	384,6	69,7	86,0	652,0	261,8	390,2	419,8	320,7	933,9	0,18	71,05	71,51	72,30	0,18	73,73	76,83	74,07	0,07	0,02	24,784583
69,0	212,0	2,2	0,1	14,3	0,0	381,4	69,8	86,6	652,5	263,2	393,1	423,4	320,6	937,7	0,18	71,13	71,51	72,37	0,18	73,80	76,88	74,08	0,07	0,01	26,467597
70,0	213,0	2,2	0,1	14,1	0,0	377,5	69,5	85,0	649,1	264,9	396,1	426,7	320,5	921,4	0,18	71,12	71,55	72,43	0,18	73,78	76,94	74,14	0,07	0,02	27,347644
71,0	214,0	2,1	0,0	13,5	0,0	372,7	69,6	85,7	647,1	267,0	399,2	429,5	320,8	919,6	0,18	71,13	71,59	72,51	0,18	73,86	76,99	74,17	0,07	0,01	28,611633
72,0	215,0	2,0	0,1	13,2	0,0	368,5	69,3	85,8	644,1	268,6	401,9	432,6	320,9	910,6	0,18	71,09	71,54	72,60	0,18	73,80	77,00	74,20	0,07	0,01	29,510998
73,0	216,0	2,0	0,0	12,6	0,0	363,5	69,6	85,3	640,1	270,2	404,8	435,4	321,1	874,5	0,18	71,02	71,50	72,65	0,18	73,75	77,09	74,23	0,08	0,01	30,182611
74,0	217,0	2,0	0,0	11,7	0,0	357,0	69,8	84,9	633,6	271,1	407,6	438,0	321,5	838,8	0,18	70,95	71,43	72,73	0,18	73,66	77,14	74,26	0,07	0,01	30,240942
75,0	218,0	1,9	0,0	10,8	0,0	351,0	69,7	84,5	626,2	272,7	410,4	440,5	321,9	811,1	0,18	70,90	71,38	72,76	0,18	73,63	77,18	74,29	0,08	0,01	30,236908
76,0	219,0	1,9	0,0	10,5	0,0	345,5	69,7	84,0	619,7	274,3	413,1	442,6	322,3	796,0	0,18	70,85	71,41	72,82	0,18	73,58	77,18	74,32	0,07	0,01	30,302222
77,0	220,0	1,9	0,0	10,1	0,0	340,1	69,5	83,9	610,3	275,8	415,8	444,4	323,2	788,2	0,18	70,95	71,52	72,87	0,18	73,70	77,17	74,34	0,07	0,01	29,785639
78,0	221,0	1,8	0,0	10,0	0,0	334,5	69,8	84,0	601,0	277,2	418,2	445,9	323,7	777,1	0,18	71,05	71,58	72,93	0,18	73,82	77,17	74,32	0,08	0,01	29,077301
79,0	222,0	1,8	0,0	9,9	0,0	329,3	70,0	83,5	594,4	278,1	420,8	447,4	324,4	764,7	0,18	71,14	71,59	72,97	0,18	73,81	77,24	74,32	0,07	0,01	28,909265
80,0	223,0	1,8	0,0	9,6	0,0	324,6	69,6	83,2	584,7	278,7	423,2	448,7	325,5	752,8	0,18	71,18	71,57	73,03	0,18	73,83	77,22	74,32	0,07	0,01	28,051172
81,0	224,0	1,7	0,0	9,4	0,0	320,4	69,3	83,4	576,0	279,7	425,2	449,8	326,3	743,1	0,18	71,09	71,52	73,09	0,18	73,80	77,23	74,30	0,07	0,01	27,280335
82,0	225,0	1,7	0,0	9,3	0,0	315,9	69,5	83,0	568,0	280,5	426,8	450,7	327,0	738,1	0,18	71,02	71,48	73,11	0,18	73,74	77,31	74,29	0,08	0,01	26,504675
83,0	226,0	1,7	0,0	9,0	0,0	312,2	69,6	82,7	560,8	281,1	428,3	451,2	328,0	737,2	0,18	71,08	71,54	73,13	0,18	73,74	77,38	74,30	0,07	0,01	25,751142
84,0	227,0	1,7	0,0	9,1	0,0	308,7	69,5	82,5	552,8	281,9	429,6	451,5	328,9	736,8	0,18	71,11	71,60	73,18	0,18	73,75	77,41	74,26	0,07	0,01	24,83443
85,0	228,0	1,6	0,0	9,2	0,0	305,4	69,4	82,4	545,8	282,6	430,7	451,8	330,2	734,8	0,18	71,08	71,61	73,21	0,18	73,76	77,43	74,25	0,07	0,01	24,094879
86,0	229,0	1,6	0,0	9,2	0,0	302,4	69,3	81,2	537,6	283,0	431,2	451,8	330,8	731,5	0,18	71,15	71,67	73,21	0,18	73,82	77,48	74,22	0,07	0,01	22,77879
87,0	230,0	1,7	0,0	9,1	0,0	299,3	69,5	82,1	530,2	284,5	432,2	451,8	332,0	728,3	0,18	71,14	71,71	73,25	0,18	73,90	77,46	74,24	0,07	0,01	22,042364
88,0	231,0	1,6	0,0	9,1	0,0	296,6	69,4	82,0	523,5	285,1	432,7	451,9	332,9	725,7	0,18	70,99	71,69	73,25	0,18	73,81	77,43	74,18	0,07	0,01	21,112555
89,0	232,0	1,6	0,0	9,1	0,0	294,4	68,9	81,4	517,2	285,1	433,2	451,6	334,0	723,9	0,18	70,90	71,66	73,27	0,18	73,74	77,51	74,17	0,07	0,01	20,108539
90,0	233,0	1,6	0,0	9,1	0,0	291,9	69,0	81,3	511,2	285,3	433,4	451,4	335,1	722,5	0,18	70,85	71,62	73,27	0,18	73,68	77,58	74,13	0,08	0,01	19,149432
91,0	234,0	1,6	0,0	9,1	0,0	290,2	69,2	81,1	505,4	285,8	433,7	451,1	335,9	721,3	0,18	70,82	71,57	73,29	0,18	73,65	77,63	74,09	0,07	0,01	18,240411
92,0	235,0	1,5	0,0	9,0	0,0	288,4	69,2	81,0	500,5	286,1	433,5	450,6	336,9	718,8	0,18	70,88	71,58	73,27	0,18	73,68	77,66	74,04	0,07	0,01	17,386255
93,0	236,0	1,5	0,0	9,0	0,0	286,9	69,1	80,8	496,1	286,5	433,6	449,9	337,7	716,8	0,18	70,95	71,63	73,27	0,18	73,68	77,63	74,00	0,07	0,01	16,661047
94,0	237,0	1,4	0,0	9,0	0,0	284,2	69,2	81,0	490,8	286,7	434,0	449,3	338,9	715,5	0,18	70,97	71,64	73,23	0,18	73,73	77,55	73,99	0,08	0,01	15,818701
95,0	238,0	1,4	0,0	9,1	0,0	283,0	68,9	80,6	485,5	286,7	434,0	448,8	340,1	714,5	0,18	70,90	71,63	73,24	0,18	73,70	77,49	73,94	0,07	0,01	14,902771
96,0	239,0	1,4	0,0	9,0	0,0	281,8	68,9	80,7	480,8

101,0	244,0	1,3	0,0	9,2	0,0	274,9	68,9	79,4	460,6	286,3	430,7	443,7	346,1	708,9	0,18	70,60	71,42	73,17	0,18	73,46	77,72	73,70	0,08	0,01	9,3724366
102,0	245,0	1,3	0,0	9,2	0,0	274,1	69,3	79,7	457,6	285,8	430,8	442,6	347,6	708,5	0,18	70,59	71,40	73,13	0,18	73,39	77,75	73,66	0,07	0,01	8,7656982
103,0	246,0	1,3	0,0	9,1	0,0	272,4	69,2	79,8	454,0	284,9	430,8	441,9	348,6	707,5	0,18	70,53	71,36	73,13	0,18	73,34	77,75	73,64	0,07	0,01	7,9165222
104,0	247,0	1,3	0,0	9,1	0,0	272,0	69,2	78,6	450,9	284,7	429,6	440,7	349,4	706,6	0,18	70,57	71,40	73,10	0,18	73,32	77,72	73,60	0,08	0,01	6,9371462
105,0	248,0	1,2	0,0	9,1	0,0	270,9	68,7	79,3	447,7	283,6	428,9	439,6	350,2	705,0	0,18	70,74	71,62	73,07	0,18	73,43	77,67	73,57	0,07	0,01	5,8820376
106,0	249,0	1,2	0,0	9,1	0,0	270,2	68,7	79,4	444,6	282,9	428,6	438,7	351,5	703,7	0,18	70,81	71,74	73,07	0,18	73,62	77,60	73,53	0,08	0,01	5,1644226
107,0	250,0	1,2	0,0	8,8	0,0	268,8	68,7	79,6	441,7	282,3	428,1	438,0	352,4	698,7	0,18	70,76	71,75	73,01	0,18	73,57	77,53	73,49	0,07	0,01	4,373578
108,0	251,0	1,2	0,0	8,7	0,0	267,8	68,8	79,6	438,8	281,3	427,5	437,1	353,4	696,2	0,18	70,73	71,73	73,01	0,18	73,57	77,58	73,48	0,07	0,01	3,5161682
109,0	252,0	1,2	0,0	8,6	0,0	266,8	68,8	79,2	435,7	280,3	426,9	436,3	354,3	695,5	0,18	70,66	71,65	72,98	0,18	73,48	77,60	73,44	0,08	0,01	2,6013794
110,0	253,0	1,2	0,0	8,6	0,0	266,5	68,9	79,2	432,6	279,3	426,0	435,5	355,2	696,8	0,18	70,59	71,61	72,95	0,18	73,44	77,61	73,39	0,07	0,01	1,6059024
111,0	254,0	1,1	0,0	8,7	0,0	265,4	69,1	78,8	429,6	279,3	425,4	434,7	356,3	698,3	0,18	70,56	71,57	72,93	0,18	73,41	77,65	73,33	0,08	0,01	0,9492798
112,0	255,0	1,1	0,0	8,7	0,0	264,1	68,9	79,0	427,0	278,7	424,2	433,9	357,2	697,9	0,18	70,51	71,52	72,89	0,18	73,38	77,69	73,29	0,07	0,01	0,0802004
113,0	256,0	1,1	0,0	8,7	0,0	263,4	69,0	78,7	424,7	277,3	423,4	432,9	358,5	697,0	0,18	70,46	71,47	72,87	0,18	73,34	77,70	73,26	0,08	0,01	-0,759436
114,0	257,0	1,1	0,0	8,7	0,0	262,2	68,8	78,1	422,0	277,1	422,0	432,1	359,2	696,6	0,18	70,56	71,60	72,82	0,18	73,37	77,66	73,21	0,08	0,01	-1,641199
115,0	258,0	1,1	0,0	8,7	0,0	261,7	69,3	78,6	418,5	277,3	421,7	430,0	361,5	695,4	0,18	70,64	71,63	72,82	0,18	73,43	77,58	73,18	0,08	0,01	-2,312115
116,0	259,0	1,1	0,0	8,7	0,0	260,6	69,1	79,4	417,9	277,2	420,2	429,4	362,0	694,7	0,18	70,72	71,79	72,80	0,18	73,59	77,49	73,15	0,07	0,01	-2,792322
117,0	260,0	1,0	0,0	8,8	0,0	260,1	69,2	81,0	415,8	276,2	419,5	428,7	362,6	694,1	0,18	70,75	71,93	72,81	0,18	73,53	77,44	73,14	0,07	0,01	-3,530902
118,0	261,0	1,0	0,0	8,8	0,0	258,8	69,6	82,1	414,3	276,2	418,3	427,5	363,9	693,7	0,18	70,89	72,00	72,85	0,18	73,70	77,43	73,13	0,08	0,01	-4,075037
119,0	262,0	1,0	0,0	8,8	0,0	258,3	69,3	83,3	412,7	275,3	417,8	426,8	364,9	693,5	0,18	70,97	71,99	72,87	0,18	73,74	77,43	73,12	0,07	0,01	-4,606805
120,0	263,0	1,0	0,0	8,9	0,0	257,3	69,1	83,0	410,7	274,9	416,9	426,0	365,6	692,7	0,18	71,04	72,00	72,90	0,18	73,76	77,43	73,12	0,08	0,01	-5,288379
121,0	264,0	0,9	0,0	8,9	0,0	256,9	69,5	82,6	409,7	274,8	415,9	424,9	367,1	692,2	0,18	71,04	71,96	72,90	0,18	73,79	77,41	73,11	0,07	0,01	-5,642743
122,0	265,0	0,9	0,0	8,8	0,0	256,2	69,2	81,9	407,6	274,1	414,9	424,2	367,5	692,6	0,18	71,09	71,99	72,92	0,18	73,81	77,41	73,11	0,07	0,01	-6,478259
123,0	266,0	0,9	0,0	8,8	0,0	256,3	69,3	81,2	406,2	273,6	413,8	423,4	368,6	692,2	0,18	71,12	71,98	72,95	0,18	73,88	77,40	73,12	0,07	0,01	-6,996967
124,0	267,0	0,9	0,0	8,8	0,0	255,5	69,5	80,9	404,8	272,8	413,1	422,4	369,7	690,8	0,18	71,09	71,94	72,95	0,18	73,96	77,41	73,10	0,08	0,01	-7,542493
125,0	268,0	0,9	0,0	8,8	0,0	255,3	69,5	80,6	402,5	272,4	411,9	421,0	370,6	686,4	0,18	71,04	71,92	72,96	0,18	73,97	77,39	73,10	0,08	0,01	-8,440674
126,0	269,0	0,9	0,0	9,2	0,0	254,6	69,4	80,2	400,9	272,1	410,8	420,4	371,2	683,6	0,18	71,03	71,94	73,00	0,18	73,97	77,42	73,10	0,08	0,01	-9,035028
127,0	270,0	0,9	0,0	9,1	0,0	254,5	69,7	79,9	400,5	271,3	410,3	419,4	372,0	682,1	0,18	70,98	71,88	73,00	0,18	73,92	77,47	73,10	0,07	0,01	-9,426422
128,0	271,0	0,8	0,0	9,1	0,0	253,9	69,5	79,9	397,8	270,7	409,1	418,7	372,9	680,9	0,18	70,94	71,86	72,98	0,18	73,84	77,51	73,11	0,07	0,01	-10,26974
129,0	272,0	0,8	0,0	9,0	0,0	253,5	69,5	79,9	396,6	270,2	408,4	417,8	373,9	679,7	0,18	70,90	71,83	72,99	0,18	73,83	77,50	73,11	0,07	0,01	-10,69526
130,0	273,0	0,8	0,0	9,0	0,0	253,0	69,1	79,2	395,3	269,5	406,9	416,8	374,4	679,5	0,18	70,91	71,94	72,99	0,18	73,78	77,51	73,09	0,07	0,01	-11,52386
131,0	274,0	0,8	0,0	9,0	0,0	252,2	69,3	79,5	394,3	268,8	406,4	416,0	376,4	679,4	0,18	71,00	71,96	72,98	0,18	73,87	77,50	73,10	0,08	0,01	-11,73562
132,0	275,0	0,8	0,0	9,0	0,0	251,8	69,1	79,5	392,9	268,4	405,8	415,1	377,1	679,5	0,18	71,06	71,95	72,99	0,18	73,93	77,53	73,06	0,08	0,01	-12,28178
133,0	276,0	0,7	0,0	9,0	0,0	251,5	69,2	79,6	391,8	267,9	405,0	414,4	377,9	680,0	0,18	71,05	71,95	73,00	0,18	73,93	77,61	73,12	0,07	0,01	-12,72745
134,0	277,0	0,7	0,0	8,8	0,0	251,1	69,3	79,3	390,8	267,1	404,4	413,6	379,0	682,0	0,18	70,97	71,87	73,01	0,18	73,89	77,68	73,11	0,08	0,01	-13,15078
135,0	278,0	0,7	0,0	8,7	0,0	251,2	69,3	78,5	390,0	266,5	403,0	412,6	379,8	685,0	0,18	70,87	71,86	72,98	0,18	73,83	77,69	73,09	0,07	0,01	-13,72704
136,0	279,0	0,7	0,0	8,6	0,0	250,8	69,2	78,6	388,9	266,1	403,0	411,8	380,8	686,6	0,18	70,89	71,89	72,98	0,18	73,88	77,72	73,10	0,08	0,01	-13,9959
137,0	280,0	0,6	0,0	8,6	0,0	250,0	69,0	79,0	388,1	265,7	402,1	411,1	381,4	687,8	0,18	70,88	71,89	72,96	0,18	73,80	77,70	73,09	0,08	0,01	-14,44173
138,0	281,0	0,7	0,0	8,6	0,0	249,9	69,0	78,5	387,6	265,6	400,4	409,8	382,8	688,0	0,18	70,93	72,02	72,95	0,18	73,88	77,63	73,04	0,07	0,01	-14,84665
139,0	282,0	0,6	0,0	8,6	0,0	250,0	69,4	78,7	387,6	265,3	400,1	408,7	383,6	686,2	0,18	71,03	72,19	72,93	0,18	73,97	77,64	73,03	0,08	0,01	-15,07465
140,0	283,0	0,6	0,0	8,3	0,0	249,7	69,2	78,3	385,4	264,9	398,5	407,9	384,4	685,6	0,18	71,01	72,16	72,91	0,18	73,96	77,63	73,01	0,07	0,01	-15,89058
141,0	284,0	0,6	0,0	8,2	0,0	250,1	69,4	78,4	384,4	264,2	397,9	407,3	385,0	686,7	0,18	71,11	72,22	72,93	0,18	73,97	77,67	73,01	0,08	0,01	-16,36747
142,0	285,0	0,6	0,0	8,0	0,0	249,3	69,2	78,4	382,9	263,2	397,1	406,5	385,7	686,4	0,18	71,08	72,18	72,90	0,18	73,95	77,68	72,99	0,07	0,01	-17,04886
143,0	286,0	0,5	0,0	8,0	0,0	249,5	69,3	78,2	382,5	262,5	396,2	405,4	386,7	686,5	0,18	71,05	72,16	72,88	0,18	73,98	77,72	72,96	0,08	0,01	-17,4454
144,0	287,0	0,6	0,0	8,1	0,0	248,8	69,2	77,8	380,5	261,6	394,9	404,6	387,4	685,0	0,18	70,96	72,09	72,87	0,18	73,91	77,79	72,97	0,07	0,01	-18,32812
145,0	288,0	0,5	0,0	8,0	0,0	248,8	69,4	78,0	380,0	260,5	394,2	403,6	388,1	684,5	0,18	70,92	72,04	72,85	0,18	73,89	77,80	72,97	0,08	0,01	-18,83887
146,0	289,0	0,5	0,0	8,0	0,0	248,6	69,1	78,1	379,3	260,0	393,8	402,8	388,9	684,2	0,18	70,97	72,11	72,84	0,18	73,90	77,76	72,92	0,07	0,01	-19,1692
147,0	290,0	0,5	0,0	8,0	0,0	248,4	68,4	78,2	378,3	259,2	392,5	401,9	389,4	683,7	0,18	70,95	72,11	72,84	0,18	73,92	77,72	72,91	0,07	0,01	-19,85273
148,0	291,0	0,5	0,0	8,1	0,0	248,3	68,9	78,4	377,2	258,2	391,8	400,9	390,1	681,8	0,18	70,88	72,07	72,79	0,18	73,86	77,72	72,88	0,07	0,01	-20,45542
149,0	292,0	0,5	0,0	8,2	0,0	247,9	68,8	78,2	376,0	257,4	390,7	400,1	390,9	680,4	0,18	70,82	72,01	72,79	0,18	73,79	77,71	72,89	0,08	0,01	-21,10312
150,0	293,0	0,4	0,0	8,1	0,0	247,8	69,2	78,3	375,3	256,5	390,0	399,2	391,9	679,6	0,18	70,74	71,94	72,79	0,18	73,77	77,74	72,85	0,07	0,01	-21,54629
151,0	294,0	0,4	0,0	8,1	0,0	247,8	68,7	78,0	374,9	255,7	388,9	398,2	392,5	678,9	0,18	70,66	71,88	72,74	0,18	73,68	77,75	72,82	0,08	0,01	-22,07496
152,0	295,0	0,4	0,0	8,1	0,0	247,7	68,8	77,8	373,9	254,2	387,7	397,3	393,3	678,5	0,18	70,62	71,82	72,70	0,18	73,64	77,81	72,80	0,07	0,01	-22,84376
153,0	296,0	0,4	0,0	8,2	0,0	247,3	68,8	77,6	373,3	252,9	385,7	396,3	394,2	677,6	0,18	70,60	71,77	72,66	0,18	73,59	77,86	72,76	0,08	0,01	-23,65062
154,0	297,0	0,4	0,0	8,3	0,0	246,7	68,9	77,6	372,8	252,2	385,4	395,5	394,9	676,2	0,18	70,55	71,72	72,65	0,18	73,56	77,88	72,74	0,08	0,01	-23,97289
155,0	298,0	0,4	0,0	8,2	0,0	246,7	68,8	77,5	371,8	250,8	384,7	394,5	396,0	676,7	0,18	70,56	71,68	72,62	0,18	73,55	77,93	72,69	0,08	0,01	-24,55637
156,0	299,0	0,3	0,0	8,2	0,0	246,6	68,7	77,5	371,1	249,8	383,4	393,6	396,8	678,8	0,18	70,56	71,64	72,58	0,18	73,50	77,94	72,67	0,07	0,01	-25,153
157,0	300,0	0,3	0,0	8,1	0,0	246,3	68,8	77,8	370,5	249,6	382,6	392,7	397,5	679,6	0,18	70,56	71,64	72,58	0,18	73,52	77,95	72,62	0,07	0,01	-25,54767
158,0	301,0	0,3	0,0	8,1	0,0	246,0	68,9	77,5	370,4	249,2	381,8	391,7	398,6	679,9	0,18	70,55	71,68	72,54	0,18	73,56	77,94	72,60	0,08	0,01	-25,74641
159,0	302,0	0,3	0,0	8,1	0,0	246,2	68,8	77,5	369,8	248,2	380,4	390,8	399,0	679,1	0,18	70,61	71,75	72,49	0,18	73,61	77,91	72,55	0,08	0,01	-26,46838
160,0	303,0	0,3	0,0	8,0	0,0	246,6	69,0	77,8	369,3	248,3	380,0	390,0	399,7	676,4	0,18	70,69	71,79	72,48	0,18	73,68	77,90	72,55	0,08	0,01	-26,6556
161,0	304,0	0,3	0,0	7,4	0,0	246,9	69,0	77,9	368,7	247,5	379,2	389,1	400,3	677,9	0,18	70,71	71,76	72,48	0,18	73,69	77,84	72,53	0,08	0,01	-27,14782
162,0	305,0	0,3	0,0	7,3	0,0	247,1	68,9	77,8	367,7	247,2	378,3	388,2	400,4	679,4	0,18	70,63	71,70	72,42	0,18	73,65	77,79	72,50	0,08	0,01	-27,74985
163,0	306,0	0,2	0,0	7,2	0,0	247,2	68,8	77,8	367,1	246,8	377,5	387,3	400,7	679,1	0,18	70,53	71,65	72,43	0,18	73,57	77,77	72,50	0,08	0,01	-28,24706
164,0	307,0	0,2	0,0	7,2	0,0	247,2	68,7	77,6	366,1	246,5	376,6	386,4	400,7	680,9	0,18	70,45	71,58	72,39	0,18	73,50	77,79	72,47	0,07	0,01	-28,85177
165,0	308,0	0,2	0,0	7,2	0,0	246,9	68,7	77,3	365,8	245,8	375,2	385,3	400,5	680,9	0,18	70,38	71,53	72,39	0,18	73,42	77,79	72,47	0,08	0,01	-29,58859
166,0	309,0	0,2	0,0	7,2	0,0	247,3	68,7	77,6	364,9	244,9	374,4	384,3	400,4	679,8	0,18	70,35	71,48	72,36	0,18	73,36	77,82	72,43	0,07	0,01	-30,31706
167,0	310,0	0,2	0,0	7,2	0,0	246,3	68,7	77,3	364,2	243,9	373,7	383,2	400,1	678,2	0,18	70,33	71,45	72,35	0,18	73,33	77,78	72,40	0,07	0,01	-31,0842
168,0	311,0	0,2	0,0	7,2	0,0	246,1	68,7	77,4	363,4	243,5	372,9	382,2	399,9	677,8	0,18	70,33	71,41	72,32	0,18	73,30	77,78	72,40	0,07	0,01	-31,72727
169,0	312,0	0,2	0,0	7,2	0,0	246,2	68,7	77,3	362,7	242,8	371,8	381,1	399,7	676,5	0,18	70,34	71,38	72,29	0,18	73,31	77,80	72,39	0,08	0,01	-32,48966
170,0	313,0	0,2	0,0	7,2	0,0	245,4	68,7	77,2	362,4	241,8	371,0	380,1	399,2	674,8	0,18	70,30	71,36	72,25	0,18	73,28	77,79	72,34	0,08	0,01	-33,2257
171,0	314,0	0,1	0,0	7,0	0,0	245,7	68,6	77,0	361,9	240,8	370,2	378,9	399,0	672,9	0,18	70,29	71,33	72,24	0,18	73,22	77,79	72,30	0,08	0,01	-33,93664
172,0	315,0	0,1	0,0	7,1	0,0	245,5	68,7	77,2	361,5	240,2	369,4	377,7	398,7	672,3	0,18	70,31	71,33	72,20	0,18	73,22	77,79	72,27	0,08	0,01	-34,6057
173,0	316,0	0,1	0,0	7,2	0,0	245,0	68,6	77,1	360,7	239,4	368,6	376,6	398,2	673,8	0,18	70,29	71,29	72,15	0,18	73,21	77,79	72,26	0,07	0,01	-35,39632
174,0	317,0	0,1	0,0	7,4	0,0	244,4	68,6	77,4	360,0	238,3	367,8	375,4	398,0	675,4	0,18	70,28	71,29	72,16	0,18	73,17	77,75	72,23	0,08	0,01	-36,22278
175,0	318,0	0,1	0,0	7,3	0,0	244,4	68,6	77,0	359,3	237,4	367,1	374,2	397,4	674,4	0,18	70,28	71,28	72,11	0,18	73,16	77,74	72,22	0,08	0,01	-37,01827
176,0	319,0	0,1	0,0	7,2	0,0	244,4	68,8	77,2	358,6	236,8	366,3	373,1	397,3	673,8	0,18	70,25	71,23	72,14	0,18	73,14	77,69	72,21	0,08	0,01	-37,70911
177,0	320,0	0,1	0,0	7,2	0,0	243,9	68,6	77,0	357,8	236,4	365,7	372,0	396,7	674,2	0,18	70,22	71,21	72,08	0,18	73,13	77,68	72,18	0,08	0,01	-38,41326
178,0	321,0	0,1	0,0	6,9	0,0	244,0	68,5	76,9	357,6	235,8	364,9	370,9	396,2	673,8	0,18	70,20	71,21	72,05	0,18	73,11	77,63	72,15	0,08	0,01	-39,03741
179,0	322,0	0,1	0,0	6,8	0,0	244,1	68,6	76,7	356,7	235,2	364,2	369,7	396,0	674,0	0,18	70,18	71,18	72,05	0,18	73,12	77,63	72,14	0,08	0,01	-39,76625
180,0	323,0	0,1	0,0	6,7	0,0	244,1	68,6	76,9	356,3	234,3	363,3	368,6	395,4	672,5	0,18	70,14	71,16	72,04	0,18	73,09	77,60	72,15	0,08	0,01	-40,53689
181,0	324,0	0,1	0,0	6,4	0,0	243,3	68,6	76,8	355,8	233,2	362,5	367,5	394,8	667,6	0,18	70,14	71,17	72,03	0,18	73,06	77,62	72,11	0,08	0,01	-41,37933
182,0	325,0	0,0	0,0	6,3	0,0	242,9	68,7	76,9	354,3	232,9	361,2	366,3	394,2	665,5	0,18	70,12	71,14	72,00	0,18	73,04	77,59	72,06	0,07	0,01	-42,32849

SFBA EPA EMISSION RESULTS

Test Duration: **182** min

PRESSURE FACTOR:	DGM 1	0,96395	
	DGM 2	0,96833	
	DGM 3	0,99437	
TEMPERATURE FACTORS	DGM 1	0,99442	
	DGM 2	0,98744	
	DGM 3	0,99816	
VOLUMES SAMPLED	DGM 1	33,135	SCft
	DGM 2	32,763	Scft
	DGM 3	32,015	SCft

TOTAL TUNNEL VOLUME : 62855

SAMPLE RATIOS

Sample Train 1:	1896,928
Sample Train 2:	1918,467

Paticulate concentration

Sample Train 1	**0,000039**	g/dscf
Sample Train 2	**0,000037**	g/dscf
Room	**0,000000**	g/dscf

TOTAL EMISSIONS

Sample Train 1	**2,47**	g
Sample Train 2	**2,30**	g

EMISSION RATES

Sample Train 1	**0,81**	g/hr
Sample Train 2	**0,76**	g/hr
1st hour emission rate	**2,09**	g/hr

	Train 1	Train 2
Cs	3,923E-05	3,66267E-05

RESULTS

Average emission rate: 0,8 g/hr

Burn Rate : 1,199 Dry kg/hr

BAROMETRIC PRESSURE

Average:	29,751464	in Hg
Start:	29,736699	in Hg
End:	29,766229	in Hg

DGM CONTROLLER VALUES

DGM 1	Final:	11999,017	Cuft
	Initial:	11964,517	Cuft
DGM 2	Final:	3573,551	Cuft
	Initial:	3539,332	Cuft
DGM #3	Final:	8367,802	Cuft
	Initial:	8335,219	Cuft

TEMPERATURES

DGM 1	530,965	°R
DGM 2	534,718	°R

CALIBRATION FACTORS

DGM 1	1,0019
DGM 2	1,0014
DGM #3	0,9900

TUNNEL FLOW RATE: 345,355 Dscfm

PARTICULATE CATCH

Total Sample Train 1:	1,30	mg
Total Sample Train 2:	1,20	mg
Total Sample Train 1 1st hour:	1,10	mg

DEVIATION: 3,44%

Manufacturer: HEARTHSTONE
Model: GM 40

Run: 2
Project #: PI 20247
Test Duration: 182 min

	HHV	LHV
Eff	76,20%	82,36%
Comb Eff	97,09%	97,09%
HT Eff	78,48%	84,82%
Output	18 049	kJ/h
Burn Rate	1,20	kg/h
Grams CO	159	g
Input	23 688	kJ/h
MC wet	17,37	

Note: In the “Input data”, "Calc. % O_2", "Fuel Properties", and “Mass Balance” columns, [e], [d], [g], [a]. [b], [c], [h], [u], [w], [j], and [k] refer to their respective variables in Clauses 13.7.3

	Ultimate CO_2
$CO_{2\text{-}ult}$	19,64
	F_0
	1,062

Overall Heating Efficiency:	76,20%	
Combustion Efficiency:	97,09%	
Heat Transfer Efficiency:	78,48%	

Air Fuel Ratio (A/F)	
Dry Molecular Weight (M_d)	29,98
Dry Moles Exhaust Gas (N_r):	389,93
Air Fuel Ratio (A/F)	11,18

Heat Output:	17 122	Btu/h	18 049	kJ/h
Heat Input:	22 470	Btu/h	23 688	kJ/h
Burn Duration:	3,03	h		
Burn Rate:	2,64	lb/h	1,196	kg/h
Stack Temp:	301,4	Deg. F	149,7	Deg. C

APPENDIX 2: Proportionality results

Average	Average	Average						Average
17,68	Inlet +	Inlet +						0,273
	Outlet	Outlet	Average	Average	#1	#2		
Tunnel	Temp.	Temp.	99,52	100,28	System 1	System 2		SQRT
Velocity	Meter 1	Meter 2	**Proportional Rates**		Vol.Std.	Vol.Std.		Delta-P
			PR1	**PR2**			Time	
Ft/Sec	Deg. R	Deg. R	**%**	**%**	(ft3)	(ft3)	min	(in H2O)2
18,251	530,3	530,0			0,182	0,182	0	0,2704953
17,097	530,4	530,1	103,48	105,09	0,182	0,182	1	0,2626024
17,550	530,4	530,3	100,54	101,61	0,182	0,182	2	0,2701424
17,749	530,4	530,3	99,32	100,49	0,182	0,181	3	0,2732925
17,851	530,4	530,4	98,75	99,97	0,182	0,181	4	0,274823
17,738	530,3	530,5	99,56	101,08	0,182	0,182	5	0,2727629
17,696	530,2	530,5	99,97	100,96	0,182	0,182	6	0,2721975
17,557	530,0	530,6	100,76	102,05	0,182	0,182	7	0,2699771
17,627	530,0	530,7	100,14	101,28	0,182	0,182	8	0,2712663
17,622	530,2	530,9	100,50	101,64	0,182	0,181	9	0,2708751
17,717	530,2	531,0	100,20	101,22	0,182	0,182	10	0,2721987
17,475	530,3	531,2	101,27	102,30	0,182	0,181	11	0,2685877
17,730	530,3	531,3	100,19	101,38	0,182	0,181	12	0,2722435
17,676	530,3	531,5	100,57	101,54	0,182	0,182	13	0,2712534
17,241	530,4	531,6	103,26	104,05	0,182	0,181	14	0,2645488
17,965	530,5	531,8	99,06	99,89	0,183	0,181	15	0,275758
17,823	530,5	532,0	99,74	100,86	0,182	0,181	16	0,2735267
17,646	530,6	532,1	100,73	101,76	0,182	0,182	17	0,2708816
17,768	530,6	532,3	99,99	101,05	0,182	0,181	18	0,2727646
17,441	530,7	532,5	102,04	102,87	0,182	0,181	19	0,2676351
17,669	530,7	532,6	100,54	101,43	0,182	0,181	20	0,2712749
17,635	530,8	532,7	100,57	101,49	0,182	0,181	21	0,2708805
17,642	530,9	532,9	100,61	101,41	0,182	0,181	22	0,2708773
17,820	530,9	533,0	99,74	100,66	0,182	0,181	23	0,2735172
17,799	531,1	533,2	99,83	100,83	0,182	0,181	24	0,2732124
17,226	531,2	533,4	103,09	103,96	0,182	0,181	25	0,264546
17,952	531,3	533,6	99,06	100,02	0,182	0,181	26	0,2753864
17,807	531,3	533,7	99,59	100,43	0,182	0,181	27	0,2735175
17,771	531,3	533,8	99,95	100,72	0,182	0,181	28	0,2727664
17,828	531,4	533,9	99,76	100,52	0,182	0,181	29	0,2735183
17,640	531,4	534,0	100,84	101,90	0,182	0,181	30	0,270516
17,397	531,4	534,1	102,04	103,13	0,182	0,181	31	0,2668701
17,747	531,4	534,2	100,22	101,05	0,182	0,181	32	0,2722015
17,377	531,5	534,3	102,47	103,22	0,182	0,181	33	0,2663339
17,256	531,6	534,4	103,07	104,15	0,182	0,181	34	0,2645509
17,119	531,6	534,6	103,76	104,47	0,182	0,181	35	0,2626063
17,309	531,8	534,7	102,87	103,53	0,182	0,181	36	0,2653069
17,647	531,8	534,7	100,87	101,53	0,182	0,181	37	0,2705689
17,631	531,8	534,9	100,78	101,56	0,182	0,181	38	0,2704996
17,827	531,9	535,0	99,73	100,35	0,182	0,181	39	0,2735198
17,213	531,9	535,1	103,21	104,05	0,182	0,181	40	0,2639691
17,547	531,9	535,1	101,14	102,01	0,182	0,181	41	0,2692273
17,784	532,0	535,2	99,87	100,57	0,182	0,181	42	0,2727805
17,816	532,0	535,3	99,56	100,24	0,182	0,181	43	0,2735208
17,037	532,0	535,3	104,05	104,81	0,182	0,181	44	0,2616281
17,609	532,0	535,4	100,55	101,19	0,182	0,181	45	0,2705863
17,417	532,0	535,5	101,61	102,15	0,182	0,180	46	0,2676402
17,883	532,1	535,6	98,94	99,54	0,182	0,180	47	0,2748313
17,590	532,2	535,7	100,44	100,90	0,182	0,180	48	0,2705034
17,949	532,2	535,7	98,35	99,13	0,182	0,180	49	0,2761739
18,036	532,2	535,8	97,92	98,24	0,182	0,180	50	0,2776164
17,801	532,2	535,9	98,98	99,62	0,182	0,180	51	0,2740839
18,065	532,2	535,9	97,45	98,22	0,182	0,181	52	0,2783578
17,712	532,2	535,9	99,24	99,66	0,182	0,180	53	0,2730344

17,744	532,3	536,0	99,11	99,75	0,182	0,180	54	0,2735216
17,885	532,3	536,0	98,12	98,79	0,182	0,180	55	0,2757527
17,958	532,4	536,1	97,86	98,17	0,182	0,180	56	0,2770644
17,996	532,4	536,1	97,35	98,13	0,182	0,180	57	0,2776207
17,914	532,4	536,2	97,89	98,46	0,182	0,180	58	0,276536
17,519	532,4	536,2	100,09	100,76	0,182	0,180	59	0,2705053
17,827	532,4	536,2	98,28	98,69	0,182	0,180	60	0,2753921
17,930	532,5	536,3	97,51	98,21	0,182	0,180	61	0,2770652
17,881	532,4	536,3	97,84	98,45	0,182	0,180	62	0,2764491
17,892	532,4	536,3	97,71	98,42	0,182	0,181	63	0,2766479
17,951	532,4	536,3	97,40	98,06	0,182	0,181	64	0,2776184
17,946	532,3	536,2	97,34	97,75	0,182	0,180	65	0,2776194
17,964	532,4	536,2	97,13	97,71	0,182	0,180	66	0,2779144
17,477	532,3	536,3	99,75	100,41	0,182	0,180	67	0,2706096
17,671	532,3	536,3	98,79	99,36	0,182	0,180	68	0,2735091
17,898	532,4	536,2	97,45	97,94	0,182	0,180	69	0,2770644
18,047	532,4	536,3	96,72	97,11	0,182	0,180	70	0,2794763
17,195	532,4	536,2	101,34	102,10	0,182	0,180	71	0,2662529
17,283	532,4	536,3	100,88	101,52	0,182	0,181	72	0,2676395
17,922	532,3	536,2	97,15	97,83	0,182	0,180	73	0,2776195
17,713	532,4	536,3	98,24	98,93	0,182	0,180	74	0,2744584
17,952	532,4	536,3	97,08	97,58	0,182	0,180	75	0,278228
17,956	532,4	536,2	96,86	97,72	0,182	0,181	76	0,2783364
17,904	532,3	536,2	97,25	97,66	0,182	0,181	77	0,2776198
17,562	532,4	536,2	99,15	99,75	0,182	0,180	78	0,2722031
17,351	532,4	536,2	100,36	100,88	0,182	0,180	79	0,2689804
17,312	532,4	536,2	100,48	101,05	0,182	0,180	80	0,2684181
17,790	532,4	536,2	97,85	98,27	0,182	0,180	81	0,2757615
17,756	532,4	536,2	97,77	98,32	0,182	0,180	82	0,2753916
17,146	532,5	536,3	101,33	102,25	0,182	0,181	83	0,2659091
17,236	532,5	536,3	100,62	101,38	0,182	0,181	84	0,2674759
17,850	532,4	536,3	97,19	97,86	0,182	0,181	85	0,2770634
17,765	532,4	536,3	97,73	98,25	0,182	0,180	86	0,2757651
17,746	532,4	536,3	97,83	98,54	0,182	0,181	87	0,2753899
17,840	532,4	536,3	97,22	97,69	0,182	0,180	88	0,2769469
17,739	532,5	536,3	97,77	98,58	0,182	0,180	89	0,2753925
17,842	532,5	536,4	97,10	97,70	0,182	0,181	90	0,2770626
17,868	532,5	536,4	96,87	97,41	0,182	0,180	91	0,2776188
17,315	532,5	536,4	100,03	100,82	0,182	0,180	92	0,2689782
17,815	532,4	536,4	97,10	97,95	0,182	0,181	93	0,276693
17,797	532,5	536,5	97,10	97,66	0,182	0,180	94	0,2766839
17,745	532,5	536,5	97,44	98,07	0,182	0,180	95	0,2757635
17,687	532,4	536,4	97,75	98,49	0,182	0,180	96	0,2748308
17,680	532,4	536,4	97,86	98,28	0,182	0,180	97	0,2748291
17,194	532,4	536,4	100,55	101,34	0,182	0,180	98	0,2672695

Average	Average	Average						Average
17,35	Inlet +	Inlet +						0,273
	Outlet	Outlet	Average	Average	#1	#2		
Tunnel	Temp.	Temp.	100,74	101,77	System 1	System 2		SQRT
Velocity	Meter 1	Meter 2	**Proportional Rates**		Vol.Std.	Vol.Std.		Delta-P
			PR1	**PR2**			Time	
Ft/Sec	Deg. R	Deg. R	**%**	**%**	(ft3)	(ft3)	min	(in H2O)2
17,045	529,9	530,1			0,181	0,181	0	0,2625987
17,740	529,9	530,3	99,29	101,15	0,181	0,181	1	0,2776084
17,649	529,9	530,4	99,90	101,46	0,181	0,181	2	0,2764542
17,689	529,9	530,5	99,74	101,11	0,182	0,181	3	0,2770163
17,646	530,0	530,7	99,96	101,58	0,182	0,181	4	0,276312
17,783	530,0	530,8	98,19	99,53	0,181	0,181	5	0,2798193
17,516	530,0	531,0	99,65	101,19	0,181	0,181	6	0,2757537
17,549	530,0	531,1	99,42	100,80	0,182	0,181	7	0,2763748
17,543	530,0	531,2	99,51	101,16	0,182	0,181	8	0,276309
17,423	530,0	531,4	99,83	101,41	0,182	0,181	9	0,2748227
17,205	530,1	531,6	101,22	102,64	0,182	0,181	10	0,2712521
17,400	530,1	531,7	100,13	101,58	0,182	0,181	11	0,2741985
17,020	530,0	531,8	102,37	103,75	0,182	0,181	12	0,2682467
17,407	530,0	531,8	99,91	101,45	0,182	0,181	13	0,2744456
17,654	530,1	531,9	98,48	99,98	0,181	0,181	14	0,2783466
17,710	530,1	532,0	98,28	99,64	0,181	0,181	15	0,2792674
17,602	530,1	532,2	98,73	100,35	0,182	0,181	16	0,2776082
17,664	530,2	532,3	98,56	99,84	0,181	0,181	17	0,278423
17,472	530,2	532,4	99,80	101,03	0,182	0,180	18	0,27538
17,438	530,2	532,4	100,04	101,38	0,182	0,181	19	0,2748226
17,022	530,2	532,5	102,54	103,85	0,182	0,181	20	0,2682059
17,759	530,2	532,6	98,22	99,62	0,182	0,181	21	0,2798185
16,986	530,2	532,7	102,75	104,06	0,182	0,181	22	0,2676133
17,218	530,2	532,7	101,44	102,66	0,182	0,181	23	0,271253
16,848	530,2	532,8	103,73	105,17	0,182	0,181	24	0,2653187
17,076	530,2	532,9	102,23	103,62	0,182	0,181	25	0,2688283
17,682	530,1	532,8	98,94	100,05	0,182	0,181	26	0,2783468
17,239	530,0	532,8	101,60	102,74	0,182	0,181	27	0,2712509
17,510	530,0	532,8	100,05	101,08	0,182	0,180	28	0,2753816
17,761	530,0	532,9	98,65	99,90	0,182	0,180	29	0,2792671
17,731	530,1	533,0	98,82	99,96	0,182	0,180	30	0,2787338
17,535	530,2	533,1	100,08	101,11	0,182	0,180	31	0,275573
17,531	530,3	533,2	100,05	101,39	0,182	0,180	32	0,2754387
17,719	530,4	533,4	99,06	100,07	0,182	0,180	33	0,278347
17,083	530,4	533,4	103,03	104,06	0,182	0,180	34	0,2682062
17,374	530,4	533,5	101,29	102,45	0,182	0,181	35	0,2727592
17,019	530,4	533,5	103,39	104,43	0,182	0,180	36	0,267083
17,655	530,4	533,6	99,67	100,83	0,182	0,180	37	0,2770542
17,545	530,4	533,6	100,29	101,34	0,182	0,180	38	0,2753816
17,473	530,5	533,7	100,77	101,85	0,182	0,180	39	0,2740733
17,484	530,5	533,8	100,75	101,86	0,182	0,180	40	0,2741692
17,472	530,6	533,8	101,11	102,26	0,182	0,180	41	0,2735111
17,556	530,7	533,9	100,92	101,91	0,182	0,180	42	0,2744491
17,513	530,8	534,0	101,32	102,40	0,182	0,180	43	0,2735112
17,656	530,9	534,0	100,53	101,55	0,182	0,180	44	0,2757554
17,707	530,9	534,1	100,20	101,03	0,182	0,180	45	0,2766762
17,688	531,0	534,2	100,08	101,33	0,182	0,180	46	0,2764508
17,804	531,0	534,2	99,45	100,39	0,182	0,180	47	0,2783457
17,668	531,0	534,3	100,20	101,21	0,182	0,180	48	0,2763124
17,551	531,0	534,4	100,80	101,83	0,182	0,180	49	0,2744475
17,026	531,0	534,5	103,84	104,91	0,182	0,180	50	0,2662871
17,797	531,1	534,5	99,34	100,49	0,181	0,180	51	0,2783092
17,614	531,1	534,6	100,42	101,54	0,181	0,180	52	0,2753808
17,576	531,1	534,7	100,70	101,80	0,182	0,180	53	0,2748231

17,095	531,2	534,7	103,47	104,52	0,181	0,180	54	0,2672478
17,631	531,3	534,8	100,27	101,46	0,181	0,180	55	0,2757553
17,443	531,3	534,9	101,33	102,35	0,181	0,180	56	0,2727724
17,543	531,3	534,9	100,62	101,92	0,181	0,180	57	0,2744506
17,478	531,2	534,9	100,93	102,22	0,181	0,180	58	0,2735136
16,713	531,3	535,0	105,67	106,48	0,181	0,180	59	0,261621
16,775	531,3	535,1	105,22	106,38	0,181	0,180	60	0,2624054
17,428	531,3	535,1	101,39	102,47	0,181	0,180	61	0,2727624
17,561	531,3	535,2	100,65	101,69	0,182	0,180	62	0,2748236
17,535	531,3	535,2	100,68	101,69	0,182	0,180	63	0,274475
17,509	531,3	535,2	100,68	101,90	0,181	0,180	64	0,2740759
17,174	531,3	535,2	102,62	103,67	0,181	0,180	65	0,2689733
17,264	531,3	535,3	101,90	103,15	0,181	0,180	66	0,2705
17,579	531,3	535,3	100,32	101,48	0,181	0,180	67	0,2753842
17,300	531,3	535,3	101,79	102,62	0,182	0,180	68	0,2711764
16,675	531,3	535,3	105,86	106,81	0,182	0,180	69	0,2612416
16,775	531,3	535,4	104,84	105,96	0,182	0,180	70	0,263188
17,216	531,4	535,4	102,02	103,30	0,181	0,180	71	0,269926
16,985	531,3	535,4	103,57	104,42	0,181	0,180	72	0,2662875
17,566	531,3	535,4	100,12	101,12	0,182	0,180	73	0,2755181
17,262	531,2	535,4	101,95	102,56	0,182	0,180	74	0,2708663
17,568	531,1	535,4	100,08	100,78	0,182	0,180	75	0,2757587
17,019	531,1	535,4	103,27	104,04	0,182	0,180	76	0,2672501
17,247	531,2	535,4	101,76	102,67	0,182	0,180	77	0,2708751
17,642	531,3	535,5	99,48	100,41	0,182	0,180	78	0,2770453
17,362	531,4	535,5	100,91	101,91	0,182	0,180	79	0,2727663
17,322	531,4	535,5	101,05	102,13	0,181	0,180	80	0,2721989
17,269	531,3	535,5	101,65	102,74	0,182	0,180	81	0,2713296
17,455	531,2	535,5	100,39	101,12	0,182	0,180	82	0,2743476
17,229	531,3	535,6	101,70	102,50	0,182	0,180	83	0,270875
17,346	531,4	535,6	100,96	102,02	0,182	0,180	84	0,2727656
17,391	531,3	535,6	100,70	101,73	0,182	0,180	85	0,2735148
16,765	531,4	535,7	104,27	105,30	0,182	0,180	86	0,2639432
17,050	531,4	535,7	102,37	103,39	0,182	0,180	87	0,2682033
17,048	531,3	535,6	102,48	103,41	0,181	0,180	88	0,2682053
17,377	531,3	535,6	100,52	101,50	0,182	0,180	89	0,2735262
17,433	531,2	535,6	100,17	100,97	0,182	0,180	90	0,2744522
17,381	531,2	535,6	100,38	101,51	0,182	0,180	91	0,2736591
16,801	531,2	535,7	103,83	104,81	0,182	0,180	92	0,2645502
16,945	531,3	535,7	102,91	104,01	0,182	0,180	93	0,2668673
17,570	531,3	535,6	99,20	100,14	0,181	0,180	94	0,2766868
16,962	531,3	535,6	102,85	103,61	0,182	0,180	95	0,2671999
17,028	531,3	535,6	102,26	103,31	0,181	0,180	96	0,2682079
17,284	531,2	535,6	100,96	101,84	0,181	0,180	97	0,2721984
17,557	531,1	535,6	99,22	100,15	0,182	0,180	98	0,2766862
17,537	531,1	535,6	99,27	100,28	0,181	0,180	99	0,2763159
17,164	531,1	535,6	101,33	102,55	0,181	0,180	100	0,2704957
17,462	531,0	535,6	99,65	100,36	0,181	0,180	101	0,2753846
16,742	531,0	535,6	103,97	105,10	0,182	0,180	102	0,2639677
16,653	530,9	535,5	104,58	105,65	0,182	0,180	103	0,2625315
17,454	531,0	535,5	99,64	100,49	0,182	0,180	104	0,2754565
17,341	531,2	535,5	100,59	101,21	0,182	0,180	105	0,2734966
17,568	531,3	535,6	99,24	99,98	0,182	0,180	106	0,2770563
16,778	531,3	535,6	103,76	104,76	0,182	0,180	107	0,2645476
17,159	531,2	535,6	101,66	102,47	0,182	0,180	108	0,2705518
17,459	531,2	535,5	99,71	100,66	0,182	0,180	109	0,2753839
16,734	531,1	535,5	104,03	104,88	0,182	0,180	110	0,2639629
17,476	531,1	535,5	99,31	100,41	0,182	0,180	111	0,2757576
17,186	531,0	535,5	101,34	102,05	0,182	0,180	112	0,271113
17,459	531,0	535,5	99,73	100,69	0,182	0,180	113	0,2754984
17,406	531,1	535,5	99,77	100,80	0,182	0,180	114	0,2748287

17,391	531,1	535,5	99,99	100,83	0,182	0,180	115	0,2744519
17,331	531,3	535,5	100,37	101,51	0,182	0,180	116	0,27333
17,370	531,3	535,5	100,48	101,43	0,182	0,180	117	0,2735169
17,507	531,4	535,6	99,91	100,90	0,182	0,180	118	0,2753835
17,323	531,5	535,6	101,24	102,07	0,182	0,180	119	0,2721985
17,485	531,5	535,6	100,12	101,18	0,182	0,180	120	0,2748238
17,203	531,5	535,6	101,88	102,64	0,182	0,180	121	0,2704952
16,723	531,5	535,6	104,66	105,72	0,182	0,180	122	0,2631309
17,372	531,6	535,6	100,28	101,36	0,182	0,180	123	0,2735136
17,451	531,5	535,7	100,03	100,82	0,181	0,180	124	0,2748247
17,481	531,5	535,7	99,83	100,66	0,182	0,180	125	0,2753841
17,391	531,5	535,7	100,25	101,06	0,182	0,180	126	0,2740757
17,268	531,4	535,7	100,83	101,82	0,182	0,180	127	0,2721967
16,978	531,4	535,7	102,70	103,76	0,182	0,180	128	0,2676168
16,721	531,4	535,7	104,36	105,26	0,182	0,180	129	0,2635765
17,089	531,4	535,6	101,83	102,81	0,182	0,180	130	0,2695449
17,603	531,5	535,7	98,89	99,72	0,182	0,180	131	0,2775852
17,406	531,5	535,7	100,03	101,10	0,182	0,180	132	0,2744661
16,629	531,5	535,8	104,57	105,89	0,182	0,180	133	0,2622075
17,708	531,4	535,8	98,38	99,29	0,182	0,180	134	0,2792703
16,961	531,4	535,8	102,42	103,32	0,182	0,180	135	0,2677105
17,503	531,4	535,8	99,39	100,20	0,182	0,180	136	0,276245
17,702	531,4	535,7	98,19	98,88	0,182	0,180	137	0,2792694
17,329	531,5	535,8	100,45	101,15	0,182	0,180	138	0,2735135
17,415	531,6	535,8	99,75	100,82	0,182	0,180	139	0,2748236
17,326	531,6	535,8	100,28	101,00	0,182	0,180	140	0,2735147
17,562	531,7	535,8	98,91	99,67	0,182	0,180	141	0,277209
17,328	531,6	535,8	100,30	101,11	0,182	0,180	142	0,2735141
17,502	531,6	535,8	99,13	100,21	0,182	0,180	143	0,2763139
17,127	531,5	535,8	101,21	102,33	0,181	0,180	144	0,2704962
17,545	531,5	535,8	98,93	99,89	0,182	0,180	145	0,2770402
17,274	531,5	535,8	100,47	101,50	0,182	0,180	146	0,2727635
16,720	531,5	535,8	103,73	104,74	0,182	0,180	147	0,2639651
17,136	531,5	535,8	101,23	102,20	0,181	0,180	148	0,2704939
17,525	531,4	535,8	99,00	99,99	0,181	0,180	149	0,2766842
17,321	531,3	535,8	100,26	101,26	0,182	0,180	150	0,2734453
17,522	531,3	535,7	99,07	100,00	0,182	0,180	151	0,2766857
16,627	531,2	535,7	104,36	105,32	0,182	0,180	152	0,2626005
17,516	531,2	535,7	98,96	100,13	0,182	0,180	153	0,2766854
17,493	531,1	535,7	99,18	99,94	0,182	0,180	154	0,2763154
17,537	531,1	535,7	98,91	99,68	0,182	0,180	155	0,277056
16,746	531,1	535,7	103,59	104,62	0,182	0,180	156	0,2645414
17,234	531,1	535,7	100,71	101,54	0,182	0,180	157	0,2721945
17,432	531,1	535,7	99,67	100,33	0,182	0,180	158	0,2753835
17,483	531,2	535,8	99,32	100,00	0,182	0,180	159	0,2761972
17,577	531,2	535,8	98,62	99,56	0,182	0,180	160	0,2776103
17,661	531,2	535,8	98,23	99,06	0,182	0,180	161	0,2789016
17,542	531,2	535,7	98,89	99,73	0,182	0,180	162	0,2770561
17,534	531,1	535,7	98,82	99,86	0,181	0,180	163	0,276922
17,237	531,0	535,6	100,70	101,65	0,182	0,180	164	0,2723044
17,369	531,0	535,6	99,66	100,50	0,182	0,180	165	0,2744529
16,894	530,9	535,6	102,60	103,45	0,181	0,180	166	0,2668633
17,048	530,9	535,6	101,82	102,59	0,182	0,180	167	0,2693673
16,929	530,9	535,5	102,50	103,38	0,182	0,180	168	0,2674731
17,452	530,9	535,6	99,42	100,19	0,182	0,180	169	0,2757569
17,510	530,8	535,5	99,05	99,89	0,182	0,180	170	0,2766851
17,446	530,8	535,5	99,31	100,17	0,182	0,180	171	0,2757569
17,672	530,8	535,5	98,10	98,82	0,182	0,180	172	0,2792696
17,239	530,8	535,5	100,57	101,34	0,182	0,180	173	0,2724627
17,394	530,8	535,5	99,88	100,58	0,182	0,180	174	0,2748225
17,529	530,8	535,4	98,94	99,84	0,182	0,180	175	0,2770556

17,450	530,7	535,4	99,37	100,24	0,182	0,180	176	0,2757554
17,785	530,7	535,4	97,45	98,26	0,182	0,180	177	0,2811012
17,385	530,7	535,4	99,78	100,55	0,182	0,180	178	0,274822
17,477	530,7	535,4	99,15	100,11	0,182	0,180	179	0,2763079
17,528	530,6	535,3	98,91	99,88	0,182	0,180	180	0,2770552
17,609	530,7	535,3	98,55	99,40	0,182	0,180	181	0,2783576
17,303	530,6	535,3	100,19	100,99	0,182	0,180	182	0,2735118

APPENDIX 3: Calibration data

Trescal
| CALIBRATION SOLUTIONS TO IMPROVE YOUR PERFORMANCE |
| LA MÉTROLOGIE AU SERVICE DE VOTRE PERFORMANCE |

4407 rue Charleroi, Montréal-Nord (Québec)
H1H 1T6 Canada
TEL.: (514) 329-3242 / 1 888 774-6665
FAX : (514) 329-3750
info.canada@trescal.com

Certificat d'Étalonnage / Certificate of Calibration

CLIENT :
SERVICES POLYTESTS INC.
695-B GAUDETTE
ST-JEAN-SUR-RICHELIEU, QUEBEC

Description: VÉRIFICATEUR D'HUMIDITÉ / MOISTURE METER
Fabricant/ Manufacturer: DELMHORST
Modèle/ Model : MCS-1 REFERENCE STANDARD
No série / Serial no : N/A
Inventaire / Asset # : EM-191

CERTIFICAT No / Certificate No: 312463

PROCÉDURE / Procedure :
TRESCAL - DELMHORST_MCS-1 REFERENCE STANDARD

aaaa - mm - jj
Date étalonnage/ Calibration Performed : 2020-12-29

Echéance/ Due Date : 2021-12-29

Type de résultat / *Results type* : As-Found = As-Left

Résultats d'essais / *Test results* : Conforme / In Tolerance

Conditions de mesure / Measurement conditions

TEMPÉRATURE / Temp. : 23°C

HUMIDITÉ / Humidity : 36% RH

Usage restreint/ *Restricted use* : ☐

Réparation effectuée / *Repair performed* : ☐

Ajustement effectué / *Adjustment performed* : ☐

ÉTALONS UTILISÉS/ Standards Used:

Identification	Manuf.	Model	Description	Ser. #	Étalonné/ Cal.	Échéance/ Due
PR0373	H-P	34401A	MULTIMETER	US36069261	2020-11-13	2021-11-13

Les spécifications mentionnées comme limites de tolérances d'essai sont celles établies par le manufacturier, sauf indication contraire.
Test tolerance limits are based on manufacturers specifications unless stated otherwise.

NOTES :

2021.01.19

Technicien :
Technician

M. BARRAK

Le système qualité de la société est conforme aux exigences de la norme **ISO 17025** et les étalons utilisés pour le processus d'étalonnage sont retraçables au SI par l'entremise du CNRC et/ou du NIST.
*Our quality system complies with the requirements of **ISO 17025** and the standards used for the calibration are traceable to SI through NRC and/or NIST.*

LE DROIT D'AUTEUR DE CE CERTIFICAT APPARTIENT À TRESCAL CANADA INC.CE CERTIFICAT NE PEUT ÊTRE REPRODUIT AUTREMENT QU'EN ENTIER ET AVEC LE CONSENTEMENT PRÉALABLE ÉCRIT DE TRESCAL CANADA INC.
TRESCAL CANADA *INC. OWN COPYRIGHT OF THIS CERTIFICATE.THE CERTIFICATE MAY NOT BE REPRODUCED OTHER THAN IN FULL EXCEPT WITH THE PRIOR WRITTEN CONSENT OF TRESCAL CANADA INC..*

Trescal
| CALIBRATION SOLUTIONS TO IMPROVE YOUR PERFORMANCE |
| LA MÉTROLOGIE AU SERVICE DE VOTRE PERFORMANCE |

Certificat d'Étalonnage
Certificate of Calibration

312463

CLIENT / Customer : SERVICES POLYTESTS INC.

DESCRIPTION / Description : VÉRIFICATEUR D'HUMIDITÉ / MOISTURE METER

MANUFACTURIER / Manufacturer : DELMHORST

MODÈLE / Model : MCS-1 REFERENCE STANDARD

DESCRIPTION Description		LIMITES Limits	LECTURES Readings	LIMITES Limits
DOUGLAS-FIR @ 80°F	**Nominal**			**Déviation** *Mohms*
12 %	120 MOhms		115,9	4,1
22 %	1,10 MOhms		1,096	0,005

S:\CERTIFICAT\MANUFACTURIER\DELMHORST\MCS-1 REFERENCE STANDARD

FORME : REV. 2011-12-13

COMPLIANT 17025 ISO/IEC

trescal.com

Instrumentation Saint•Laurent inc.
Accrédité ISO 17025

CLAS NRC·CNRC
CLAS 2010-02

SCC Accredited LAB
LAB Accrédité CCN
N°669

80 rue de la montagne
St-Joseph du lac
(Québec), J0N 1M0
Tél: (450) 473-6169
Fax: (450) 473-5207
Email: inst.st-laurent@videotron.ca

CERTIFICAT D'ÉTALONNAGE

No.Certificat: CE-EM-006 23/03/20

CLIENT	
Compagnie:	Services Polytests Inc
Adresse:	695 B rue Gaudette
	St-Jean-sur-Richelieu, Québec, J3B 7S7

SPÉCIFICATION DE CALIBRATION	
Procédure de service:	4IN9106
Précision requise:	+\-0.25"H2O
Fréquence d'étalonnage: (jours)	365

SPÉCIFICATION DE L'INSTRUMENT			
Type d'instrument:	Indicateur	**Type d'entrée:**	Pression
Manufacturier:	Dwyer	**Type de sortie:**	Digitale
No. Model:	MS-321-LCD	**Type de mesure:**	Pression
No. Série:	E47U020014	**Gamme:**	0-0.5"H2O
Emplacement:	N.A.	**No. Machine:**	N.A.

SPÉCIFICATION DE L'ÉTALON			
Étalon Utilisé:	Setra	**No. du certificat d'étalonnage:**	2020001510
No. Série:	2784759	**Dernière date d'étalonnage:**	5-Mar-20
Certificat fait par:	Alpha Controls	**Prochaine date d'étalonnage:**	5-Mar-21
Commentaire:			

SPÉCIFICATION DE L'ÉTALON			
Étalon Utilisé:	Fluke 744	**No. du certificat d'étalonnage:**	2019007064
No. Série:	8139009	**Dernière date d'étalonnage:**	18-Oct-19
Certificat fait par:	Alpha Controls	**Prochaine date d'étalonnage:**	18-Oct-20
Commentaire:			

RÉSULTAT D'ÉTALONNAGE

Entrée Source	Valeur Donnée	Valeur Actuelle	Erreur de Déviation	Valeur après Étalonnage	Incertitude Élargie	Commentaire
0.0000 "H2O	0.000 "H2O	0.000 "H2O	0.000 "H2O	0.000 "H2O	0.25 "H2O	Vérification indicateur
0.2500 "H2O	0.250 "H2O	0.249 "H2O	-0.001 "H2O	0.249 "H2O	0.25 "H2O	Vérification indicateur
0.5000 "H2O	0.500 "H2O	0.500 "H2O	0.000 "H2O	0.500 "H2O	0.25 "H2O	Vérification indicateur
0.7500 "H2O	0.750 "H2O	0.750 "H2O	0.000 "H2O	0.750 "H2O	0.25 "H2O	Vérification indicateur
1.0000 "H2O	1.000 "H2O	0.994 "H2O	-0.006 "H2O	0.994 "H2O	0.25 "H2O	Vérification indicateur
0.0000 "H2O	0.0000 V.DC.	0.0004 V.DC.	+0.0004 V.DC.	0.0004 V.DC.	0.5 V.DC.	Vérification sortie analogique
0.2500 "H2O	2.5000 V.DC.	2.4853 V.DC.	-0.0147 V.DC.	2.4853 V.DC.	0.5 V.DC.	Vérification sortie analogique
0.5000 "H2O	5.0000 V.DC.	4.9780 V.DC.	-0.0220 V.DC.	4.9780 V.DC.	0.5 V.DC.	Vérification sortie analogique
0.7500 "H2O	7.5000 V.DC.	7.5042 V.DC.	0.0042 V.DC.	7.5042 V.DC.	0.5 V.DC.	Vérification sortie analogique
1.0000 "H2O	10.0000 V.DC.	9.9672 V.DC.	-0.0328 V.DC.	9.9672 V.DC.	0.5 V.DC.	Vérification sortie analogique

Conditions Environnementales: Température: 20 °C Humidité: 31 %RH

Type d'Étalonnage:

Le droit d'auteur du présent certificat appartient à Inst. St-Laurent Inc et doit être reproduit intégralement, à moins d'une autorisation écrite de Inst. St-Laurent Inc.

Instrumentation Saint•Laurent inc.
Accrédité ISO 17025

CLAS NRC·CNRC
CLAS 2010-02

SCC Accredited LAB
LAB Accrédité CCN
N°669

80 rue de la montagne
St-Joseph du lac
(Québec), J0N 1M0
Tél: (450) 473-6169
Fax: (450) 473-5207
Email: inst.st-laurent@videotron.ca

CERTIFICAT D'ÉTALONNAGE

No.Certificat: CE-EM-006 23/03/20

CLIENT	
Compagnie:	Services Polytests Inc
Adresse:	695 B rue Gaudette
	St-Jean-sur-Richelieu, Québec, J3B 7S7

SPÉCIFICATION DE CALIBRATION	
Procédure de service:	4IN9106
Précision requise:	+\-0.25"H2O
Fréquence d'étalonnage: (jours)	365

SPÉCIFICATION DE L'INSTRUMENT			
Type d'instrument:	Indicateur	**Type d'entrée:**	Pression
Manufacturier:	Dwyer	**Type de sortie:**	Digitale
No. Model:	MS-321-LCD	**Type de mesure:**	Pression
No. Série:	E47U020014	**Gamme:**	0-0.5"H2O
Emplacement:	N.A.	**No. Machine:**	N.A.

Instrumentation St-Laurent Inc. Certifie que l'instrument ci-haut, rencontre ou excède les spécifications établies par le fabriquant. Le système qualité de l'entreprise est conforme aux exigences de la norme ISO 17025 et les étalons utilisés pour effectuer l'étalonnage est retraçable au CNRC et/ou au NIST. Le degré d'incertitude est basé sur un niveau de confiance=95%, K=2.

DATE D'ÉTALONNAGE / ÉMISSION DU CERTIFICAT	
Date d'Étalonnage:	23 Mars 2020
Date du prochain Étalonnage:	23 Mars 2021
Date d'émission du certificat:	23 Mars 2020

CONFORMITÉ D'ÉTALONNAGE	Avant	Après
Conforme:	X	X
Non Conforme:		

Le Service d'évaluation des laboratoires d'étalonnage (CLAS) du Conseil national de recherches du Canada (CNRC) a évalué et certifié la capacité d'étalonnage du laboratoire et la traçabilité au Système international d'unités (SI) ou à des étalons acceptables selon le CLAS. Le présent certificat d'étalonnage est délivré conformément aux conditions de certification du CLAS et aux conditions d'accréditation du Conseil canadien des normes (CCN). Numéro d'accréditation du CCN: # 669. Le CLAS et le CCN ne garantissent pas l'exactitude des étalonnages individuels effectués par les laboratoires accrédités.

Martin Langlais - Technicien

2020-03-30

5F09106

Le droit d'auteur du présent certificat appartient à Inst. St-Laurent Inc et doit être reproduit intégralement, à moins d'une autorisation écrite de Inst. St-Laurent Inc.

Calibration Certificate ID
CA0123-205-012721-ACC-USL

METTLER TOLEDO

Mettler-Toledo Inc.
Service Division
1900 Polaris Parkway
Columbus, OH 43240
1-800-METTLER

Accredited by the American Association for Laboratory Accreditation (A2LA)
CALIBRATION CERT #1788.01

ISO 17025 Accredited
ANSI/NCSL Z540-1 Accredited

Accuracy Calibration Certificate

Customer

Company:	Services Polytests		
Address:	695-B Rue Gaudette		
City:	Saint-Jean-Sur-Richelieu	Contact:	Danick Power
Zip / Postal:	J3B 7S7		
State / Province:	Quebec		

Weighing Device

Manufacturer:	Ohaus	Instrument Type:	Weighing Instrument
Model:	AR2140	Asset Number:	EM-051
Serial No.:	M3658329010091	Terminal Model:	N/A
Building:	N/A	Terminal Serial No.:	N/A
Floor:	N/A	Terminal Asset No.:	N/A
Room:	N/A		

Range	Max. Capacity	Readability (d)
1	210 g	0.0001 g

Procedure

Calibration Guideline:	EURAMET cg-18 v. 4.0 (11/2015)
METTLER TOLEDO Work Instruction:	30260953

This calibration certificate contains measurements for As Found and As Left calibrations.

The sensitivity/span of the weighing instrument was adjusted before As Left calibration with an external weight. As Left 472

In accordance with EURAMET cg-18 (11/2015), the test loads were selected to reflect the specific use of the weighing device or to accommodate specific calibration conditions.

	Temperature	
As Found	Start: 26.0 °C	End: 26.0 °C
As Left	Start: 26.0 °C	End: 26.0 °C

Environmental conditions have been verified to ensure the accuracy of the calibration.

This certificate is issued in accordance with the conditions of accreditation granted by A2LA, which is based on ISO/IEC 17025. A2LA has assessed the measurement capability of the laboratory and its traceability to recognized national standards.

As Found Calibration Date:	27-01-2021	Authorized A2LA Signatory:	
As Left Calibration Date:	27-01-2021		Kamel Mohand Kaci
Issue Date:	27-01-2021		
Requested Next Calibration Date:	31-01-2022		

2021-01-27

© METTLER TOLEDO
This is an original document and may not be partially reproduced without the written permission of the issuing calibration laboratory.

Measurement Results

Repeatability

Test Load: 100 g

	As Found	As Left
1	100.0008 g	100.0003 g
2	100.0007 g	100.0004 g
3	100.0007 g	100.0003 g
4	100.0008 g	100.0005 g
5	100.0007 g	100.0004 g
6	100.0008 g	100.0003 g
7	100.0007 g	100.0003 g
8	100.0008 g	100.0003 g
9	100.0006 g	100.0004 g
10	100.0007 g	100.0004 g

Standard Deviation	**0.00007 g**	**0.00007 g**

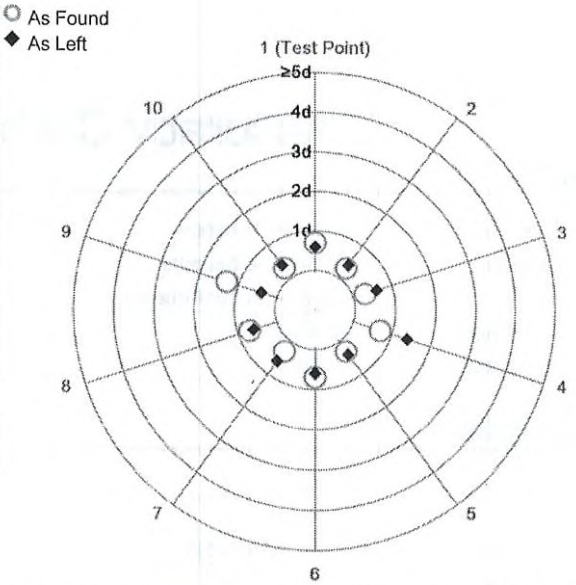

The "d" in the graph represents the readability of the range/interval in which the test was performed.

The results of this graph are based upon the absolute values of the differences from the mean value.

Eccentricity

Test Load: 100 g

Position	As Found	As Left
1	0.0000 g	0.0000 g
2	0.0000 g	0.0000 g
3	0.0000 g	0.0000 g
4	0.0000 g	0.0000 g
5	0.0000 g	0.0000 g

Maximum Deviation	**0.0000 g**	**0.0000 g**

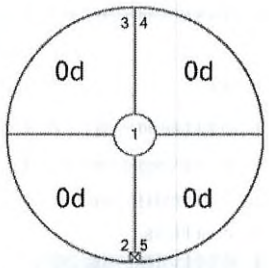

As Found

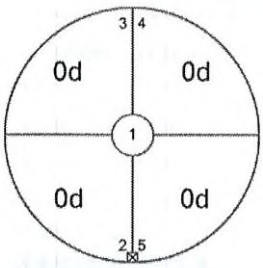

As Left

The "d" in the graph represents the readability of the range/interval in which the test was performed.

Error of Indication

As Found

	Reference Value	Indication	Error of Indication	Expanded Uncertainty	k
1	0.0000 g	0.0000 g	0.0000 g	0.15 mg	2
2	50.0000 g	50.0003 g	0.0003 g	0.27 mg	2
3	100.0000 g	100.0008 g	0.0008 g	0.46 mg	2
4	150.0000 g	150.0008 g	0.0008 g	0.67 mg	2
5	200.0001 g	200.0009 g	0.0008 g	0.84 mg	2

© METTLER TOLEDO
This is an original document and may not be partially reproduced without the written permission of the issuing calibration laboratory.

As Left

	Reference Value	Indication	Error of Indication	Expanded Uncertainty	k
1	0.0000 g	0.0000 g	0.0000 g	0.15 mg	2
2	50.0000 g	50.0001 g	0.0001 g	0.19 mg	2
3	100.0000 g	100.0002 g	0.0002 g	0.26 mg	2
4	150.0000 g	150.0000 g	0.0000 g	0.34 mg	2
5	200.0001 g	199.9999 g	-0.0002 g	0.36 mg	2

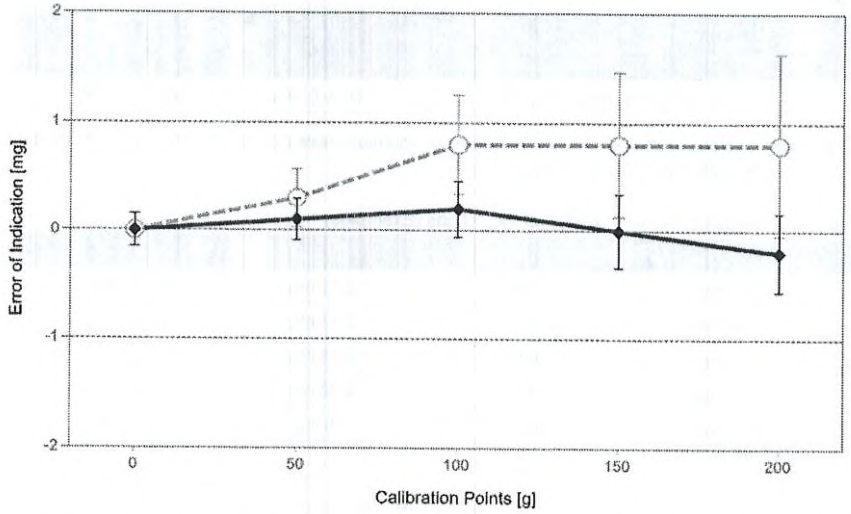

As Found

As Left

For improved legibility of the graphics only increasing measurement points are shown and measurement points close to zero are not displayed.

The uncertainty stated is the expanded uncertainty at calibration obtained by multiplying the standard combined uncertainty by the coverage factor k – which can be larger than 2 according to EURAMET cg-18. The value of the measurand lies within the assigned range of values with a probability of approximately 95%.

The user is responsible for maintaining environmental conditions and the settings of the weighing instrument when it was calibrated.

Test Equipment

All weights used for metrological testing are traceable to national or international standards. The weights were calibrated and certified by an accredited calibration laboratory.

Weight Set 1: OIML E2

Weight Set No.:	472	Date of Issue:	28-02-2020
Certificate Number:	01127534-1	Calibration Due Date:	28-02-2021

Remarks

calibration faite selon tolerances du fabricant METTLER TOLEDO pour un model comparable: AB204

End of Accredited Section

The information below and any attachments to this calibration certificate are not part of the accredited calibration.

© METTLER TOLEDO
This is an original document and may not be partially reproduced without the written permission of the issuing calibration laboratory.

Measurement Uncertainty of the Weighing Instrument in Use

Stated is the expanded uncertainty with k=2 in use. The formula shall be used for the estimation of the uncertainty under consideration of the errors of indication. The value R represents the net load indication in the unit of measure of the device.

Temperature coefficient for the evaluation of the measurement uncertainty in use: $3.0 \cdot 10^{-6}$ / K

Temperature range on site for the evaluation of the measurement uncertainty in use: 4 K

Linearization of Uncertainty Equation

	Range		As Found	As Left
	d	Max		
1	0.0001 g	210 g	U_1 = 0.16 mg + 0.0149 mg/g · R	U_1 = 0.16 mg + 0.00798 mg/g · R

To optimize the stability of the linearization, besides of the zero load only increasing measurement points with a test load of 5% of the measurement range or larger are taken for the calculation of the linear equation.

Absolute and Relative Measurement Uncertainty in Use for Various Net Indications (Examples)

Net Indication	As Found		As Left	
0.0210 g	0.16 mg	0.76%	0.16 mg	0.76%
0.2100 g	0.16 mg	0.078%	0.16 mg	0.077%
2.1000 g	0.19 mg	0.0091%	0.18 mg	0.0084%
21.0000 g	0.47 mg	0.0023%	0.33 mg	0.0016%
210.0000 g	3.3 mg	0.0016%	1.8 mg	0.00087%

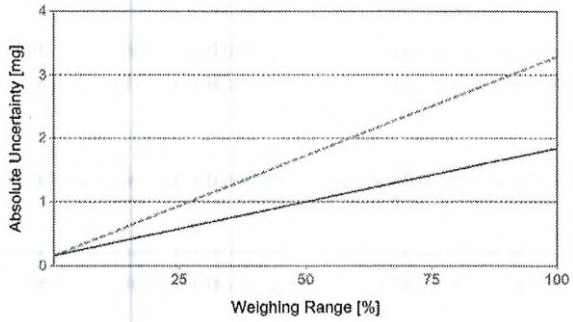

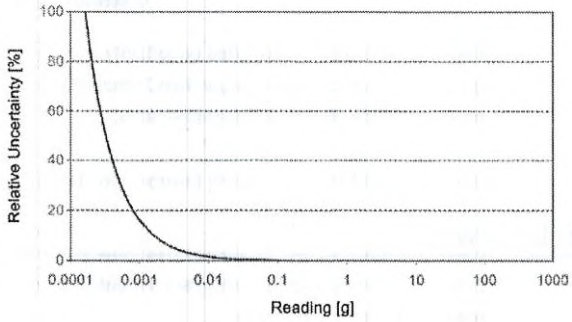

As Found

As Left

© METTLER TOLEDO
This is an original document and may not be partially reproduced without the written permission of the issuing calibration laboratory.

METTLER TOLEDO Service

Custom Tolerance Assessment

Assessment done without considering measurement uncertainty.

One or more of the measurements from the attached calibration certificate were assessed against customer-defined tolerances.

	As Found	As Left
Overall	✗	✓
Repeatability	✓	✓
Eccentricity	✓	✓
Error of Indication	✗	✓

Measurement Results

Repeatability

Test Load: 100 g

	As Found	As Left
1	100.0008 g	100.0003 g
2	100.0007 g	100.0004 g
3	100.0007 g	100.0003 g
4	100.0008 g	100.0005 g
5	100.0007 g	100.0004 g
6	100.0008 g	100.0003 g
7	100.0007 g	100.0003 g
8	100.0008 g	100.0003 g
9	100.0006 g	100.0004 g
10	100.0007 g	100.0004 g

Standard Deviation	0.00007 g	0.00007 g
Tolerance	0.00010 g ✓	0.00010 g ✓

© METTLER TOLEDO
This is an original document and may not be partially reproduced without the written permission of the issuing calibration laboratory.

METTLER TOLEDO Service

Eccentricity

Test Load: 100 g

Position	As Found	As Left
1	0.0000 g	0.0000 g
2	0.0000 g	0.0000 g
3	0.0000 g	0.0000 g
4	0.0000 g	0.0000 g
5	0.0000 g	0.0000 g

Maximum Deviation	0.0000 g	0.0000 g
Tolerance	0.0003 g ✓	0.0003 g ✓

Error of Indication

As Found

	Reference Value	Indication	Error of Indication	Tolerance	
1	0.0000 g	0.0000 g	0.0000 g	0.0001 g	✓
2	50.0000 g	50.0003 g	0.0003 g	0.0003 g	✓
3	100.0000 g	100.0008 g	0.0008 g	0.0006 g	✗
4	150.0000 g	150.0008 g	0.0008 g	0.0009 g	✓
5	200.0001 g	200.0009 g	0.0008 g	0.0012 g	✓

As Left

	Reference Value	Indication	Error of Indication	Tolerance	
1	0.0000 g	0.0000 g	0.0000 g	0.0001 g	✓
2	50.0000 g	50.0001 g	0.0001 g	0.0003 g	✓
3	100.0000 g	100.0002 g	0.0002 g	0.0006 g	✓
4	150.0000 g	150.0000 g	0.0000 g	0.0009 g	✓
5	200.0001 g	199.9999 g	-0.0002 g	0.0012 g	✓

© METTLER TOLEDO
This is an original document and may not be partially reproduced without the written permission of the issuing calibration laboratory.

DISPERSION
Laboratoire • Laboratory DIVISION • TRANSCAT CANADA

CLAS
NRC CNRC
CLAS 2010-01

CERTIFICAT D'ÉTALONNAGE

9900 Chemin de la Côte-de-Liesse, Lachine, QC H8T 1A1
www.dispersion.ca 1.866.390.5066

Client :	Polytests	**No. du Certificat :**	**152-4BB901-181**
Adresse :	695 B rue Gaudette St-Jean-sur-Richelieu, QC J3B7S7	**Date d'étalonnage :**	09-01-2018

Technicien:
Simeonidis, Georgios

David Llorens, Responsable Qualité

DESCRIPTION DU SERVICE:

Description des masses :	ASTM E617	**Date d'approbation :**	09-01-2018
Classe de précision :	ASTM 6	**Date prochain étalonnage :**	09-01-2023
Densité :	7.95g/cm³	**Accrédtation CCN n. :**	668
Identification (si unique) :	EM-090	**Certification CLAS n. :**	2010-01

Condition d'essai :	Temp °C:	21.17	Pression kPa:	101.475	Humidité:	48.665

NOTES:

Pour l'étalonnage des masses, nous utilisons la procédure "Comparaison individuelle" PDL-09-MG-001 et la procédure "Détermination des incertitudes" PDL-09-MG-002. Le droit d'auteur du présent certificat appartient au laboratoire délivreur et doit être reproduit intégralement, à moins d'une autorisation écrite du laboratoire délivreur.

REMARQUES:

11 JAN. 2018

DISPERSION
Laboratoire • Laboratory DIVISION • TRANSCAT CANADA

CLAS 2010-01

CERTIFICAT D'ÉTALONNAGE

9900 Chemin de la Côte-de-Liesse, Lachine, QC H8T 1A1
www.dispersion.ca 1.866.390.5066

Client :	Polytests	**No. du Certificat :**	**152-4BB901-181**
Adresse :	695 B rue Gaudette	**Accrédtation CCN n. :**	668
	St-Jean-sur-Richelieu, QC	**Certification CLAS n. :**	2010-01
	J3B7S7	**Classe d'exactitude :**	ASTM 6
		Date d'étalonnage :	09-01-2018
Masse :	2 kg	**Date du prochain étalonnage :**	09-01-2023

RÉSULTAT DE L'ÉTALONNAGE, MASSE CONVENTIONNELLE:

Valeur Nominale	No de série	No d'inventaire	Masse conventionnelle	Masse conventionnelle après ajustement	Tolérance ± (mg)	Incertitudes ± (mg)
2 kg		EM-090	2.0001538 kg		200 mg	2.0 mg

S.P.

DISPERSION
Laboratoire • Laboratory DIVISION • TRANSCAT CANADA

CLAS
NRC CNRC
CLAS 2010-01

CERTIFICAT D'ÉTALONNAGE

9900 Chemin de la Côte-de-Liesse, Lachine, QC H8T 1A1
www.dispersion.ca 1.866.390.5066

Client :	Polytests	**No. du Certificat :**	**152-4BB901-181**
Adresse :	695 B rue Gaudette	**Accrédtation CCN n. :**	668
	St-Jean-sur-Richelieu, QC	**Certification CLAS n. :**	2010-01
	J3B7S7	**Classe d'exactitude :**	ASTM 6
		Date d'étalonnage :	09-01-2018
Masse :	2 kg	**Date du prochain étalonnage :**	09-01-2023

RÉSULTAT DE L'ÉTALONNAGE DES POIDS, CORRECTIONS:

Valeur Nominale	No de série	No d'inventaire	Masse conventionnelle Correction	Masse conventionnelle Correction après ajustement	Tolérance ± (mg)	Incertitudes ± (mg)
2 kg		EM-090	153.8 mg		200 mg	2.0 mg

CERTIFICAT D'ÉTALONNAGE

9900 Chemin de la Côte-de-Liesse, Lachine, QC H8T 1A1
www.dispersion.ca 1.866.390.5066

BALANCES UTILISÉES

Pour l'étalonnage manuel :

> 5 kg à 25 kg :	Mettler Toledo XP32003L, SNR 1123271214, max. 32100 g, d = 0.005 g
> 1 kg à 5 kg	Mettler Toledo PR5003, SNR 1115311634, max. 5100 g, d = 0.001 g
> 300 g à 2 kg :	Mettler Toledo XP2004S, SNR B131185222, max. 2100 g, d = 0.1 mg
> 100 g à 200 g :	Mettler Toledo AT201 SNR BA1115230146, max. 205 g, d = 0.01 mg
> 5 g à 100 g :	Mettler Toledo AX106 SNR 1127063924, max. 111 g, d = 1 µg
1 mg à 5 g :	Mettler UMX5, SNR 1121103055, max. 5.1 g, d = 0.1 µg

Pour l'étalonnage automatisé :

> 200 g à 1 kg :	Mettler Toledo AX1005 SNR 1127063210, max. 1109 g, d = 0.01 mg
> 5 g à 100 g :	Mettler Toledo AX106 SNR 1120143015, max. 111 g, d = 1 µg
1 mg à 5 g :	Mettler UMX5, SNR 1125140561, max. 5.1 g, d = 0.1 µg

Les balances sont vérifiées selon notre procédure de contrôle périodique PDL-11-MG-001.

INCERTITUDES:

Les incertitudes que nous retrouvons comprennent :

1. *L'incertitude associée à l'opération de pesage.*
2. *L'incertitude associée à la densité de l'air.*
3. *L'incertitude associée à l'étalon utilisé.*
4. *L'incertitude associée à la densité de la masse à être étalonnée.*

L'incertitude de l'opération de pesage comprend la reproductibilité à long terme.

Les incertitudes précisées dans ce rapport sont des incertitudes élargies représentant un niveau de confiance d'approximativement 95 %, obtenu en multipliant ensemble l'incertitude-type composée par un facteur de couverture de k = 2. Pour de plus amples renseignements, veuillez consulter la publication GUM (Guide pour l'expression de l'incertitude de mesure, édition de 1995).

TRAÇABILITÉ

Le Service d'évaluation de laboratoires d'étalonnage (CLAS) du Conseil national de recherches du Canada (CNRC) a évalué et a certifié des capacités d'étalonnage spécifiques de ce laboratoire et leur traçabilité à des étalons nationaux de mesure reconnus et au Système international d'unités (SI). Ce certificat d'étalonnage est émis conformément aux conditions de certification accordées par CLAS et aux conditions d'accréditation accordées par le Conseil canadien des normes (CCN). Le CLAS pas plus que le CCN ne peut garantir l'exactitude des étalonnages individuels effectués par des laboratoires accrédités.

S.P.

CERTIFICAT D'ÉTALONNAGE

9900 Chemin de la Côte-de-Liesse, Lachine, QC H8T 1A1
www.dispersion.ca 1.866.390.5066

RÉFÉRENCES UTILISÉES

Poids	No de série	Fabricant	Date d'étalonnage	Date due
20kg	69976	Troemner	30-05-2017	30-05-2018
5kg	129099	Mettler Toledo	02-09-2017	02-09-2018
5kg	96-0888-50-3	Denver Instrument Company	02-09-2017	02-09-2018
2kg	129098	Mettler Toledo	02-09-2017	02-09-2018
2kg	96-0888-50-3	Denver Instrument Company	02-09-2017	02-09-2018
300g	96-0888-50-2	Denver Instrument Company	02-09-2017	02-09-2018
1kg - 1mg	MT-01	Mettler Toledo	02-09-2017	02-09-2018

ÉTALONS CERTFIÉS PAR LE CNRC(**Référence NRC MS-2016-0021**)

Poids	No de série	Fabricant	Date d'étalonnage	Date due
100g	95170	Mettler Toledo	17-10-2016	17-10-2018
10kg	129100	Mettler Toledo	17-10-2016	17-10-2018
1kg	95171	Mettler Toledo	17-10-2016	17-10-2018

RÉFÉRENCES DE LA STATION ROBOTISÉE

Poids	No de série	Fabricant	Date d'étalonnage	Date due
1kg - 1mg	DK000A132	Laboratoire Dispersion	01-08-2017	01-08-2018

DP

ID Certificat de Calibration
520501-020-122120-ACC-USI

METTLER TOLEDO

Mettler-Toledo Inc.
Service Division
1900 Polaris Parkway
Columbus, OH 43240
1-800-METTLER

Accredited by the American Association for Laboratory Accreditation (A2LA)
CALIBRATION CERT #1902.01

ISO 17025 Registered
ANSI/NCSL Z540-1 Accredited

Certificat de Calibration de Précision

Accuracy Calibration Certificate

Client

Compagnie:	Services Polytests		
Adresse:	695-B Rue Gaudette		
Ville:	Saint-Jean-Sur-Richelieu	Contact:	Danick Power
Zip/Code Postal:	J3B 7S7		
État/Province:	Quebec		

Weighing Device

Manufacturier:	RICE LAKE	Type d'Instrument:	Weighing Instrument
Modèle:	4X4HP-10K	# Outil:	EM-114 EM-137
No. Série:	C18395	Modèle Indicateur:	IQ+355
Building:	N/D	Terminal Serial No.:	164851
Floor:	N/D	Terminal Asset No.:	N/D
Room:	N/D		

Plage	Capacité Max	Lisibilité (d)
1	400 kg	0.05 kg

Procedure

Instruction de Calibration:	EURAMET cg-18 v. 4.0 (11/2015)
Instruction de travail METTLER TOLEDO:	30260953

Ce certificat de calibration contient des mesures pour la calibration Tel que Trouvé. Aucune calibration Tel que Laissé n'a été effectuée puisque l'appareil n'a pas été modifié suite à la calibration Tel que Trouvé. Par conséquent, les résultats Tel que Laissé correspondent aux résultats Tel que Trouvé.

The calibration was agreed with the user below the maximum capacity of the balance.

	Temperature	
Tel que Trouvé	Start: 20.0 °C	End: 20.0 °C

Environmental conditions have been verified to ensure the accuracy of the calibration.

This certificate is issued in accordance with the conditions of accreditation granted by A2LA, which is based on ISO/IEC 17025. A2LA has assessed the measurement capability of the laboratory and its traceability to recognized national standards.

Date calibration Tel que Trouvé:	21-12-2020
Date calibration Tel que Laissé:	N/D
Date d'Émission:	21-12-2020
Requested Next Calibration Date:	31-12-2021

Authorized A2LA Signatory:

Stephane Poisson

22 déc. 2020

© METTLER TOLEDO
Le document a été fourni par voie électronique.

Résultats de Mesure

Répétabilité

Charge de Test: 70 kg

	Tel que Trouvé	Tel que Laissé
1	70.00 kg	N/D
2	70.00 kg	N/D
3	70.00 kg	N/D
4	70.00 kg	N/D
5	70.00 kg	N/D
6	70.00 kg	N/D

Écart Type	**0.000 kg**	**N/D**

○ Tel que Trouvé
◆ Tel que Laissé

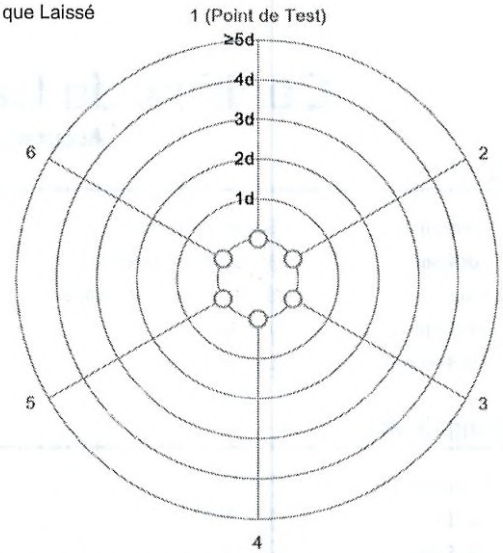

The "d" in the graph represents the readability of the range/interval in which the test was performed.

The results of this graph are based upon the absolute values of the differences from the mean value.

Excentricité

Charge de Test: 50 kg

Position	Tel que Trouvé	Tel que Laissé
1	50.00 kg	N/D
2	50.00 kg	N/D
3	50.00 kg	N/D
4	50.00 kg	N/D
5	50.00 kg	N/D

Déviation Maximale	**0.00 kg**	**N/A**

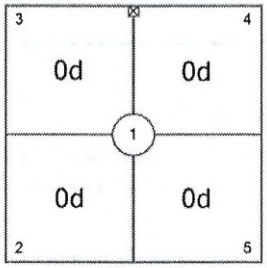

Tel que Trouvé

The "d" in the graph represents the readability of the range/interval in which the test was performed.

© METTLER TOLEDO
Le document a été fourni par voie électronique.

Erreur d'indication

Tel que Trouvé

	Reference Value	Indication	Erreur d'indication	Incertitude Élargie	k
1	0 kg	0.00 kg	0.00 kg	0.029 kg	2
2	35 kg	35.00 kg	0.00 kg	0.041 kg	2
3	75 kg	75.00 kg	0.00 kg	0.041 kg	2
4	110 kg	110.00 kg	0.00 kg	0.042 kg	2
5	150 kg	150.05 kg	0.05 kg	0.043 kg	2
6	110 kg	110.00 kg	0.00 kg	0.042 kg	2
7	75 kg	75.00 kg	0.00 kg	0.041 kg	2
8	35 kg	35.00 kg	0.00 kg	0.041 kg	2
9	0 kg	0.00 kg	0.00 kg	0.029 kg	2

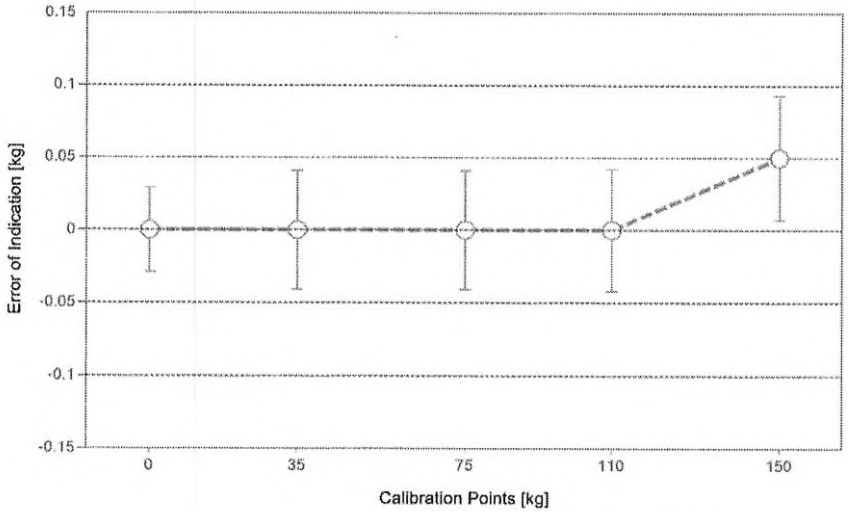

○ Tel que Trouvé

◆ Tel que Laissé

For improved legibility of the graphics only increasing measurement points are shown and measurement points close to zero are not displayed.

The uncertainty stated is the expanded uncertainty at calibration obtained by multiplying the standard combined uncertainty by the coverage factor k – which can be larger than 2 according to EURAMET cg-18. The value of the measurand lies within the assigned range of values with a probability of approximately 95%. The user is responsible for maintaining environmental conditions and the settings of the weighing instrument when it was calibrated.

Test Equipment

Tous les poids utilisés pour le contrôle métrologique sont retraçables aux étalons Nationaux et Internationaux. Les poids ont été calibrés et certifiés par un laboratoire de calibration accrédité.

Jeu de Poids 1: OIML M1

Weight Set Number:	67094	Date d'Émission:	11-09-2020
# Certificat:	M20-0351	Date de Calibration Due:	11-09-2021

Jeu de Poids 2: OIML M1

Weight Set Number:	S	Date d'Émission:	28-05-2020
# Certificat:	1412741	Date de Calibration Due:	28-05-2021

Remarques

N/D

© METTLER TOLEDO
Le document a été fourni par voie électronique.

End of Accredited Section

The information below and any attachments to this calibration certificate are not part of the accredited calibration.

© METTLER TOLEDO
Le document a été fourni par voie électronique.

Incertitude de Mesure du dispositif de pesage en opération

Stated is the expanded uncertainty with k=2 in use. The formula shall be used for the estimation of the uncertainty under consideration of the errors of indication. The value R represents the net load indication in the unit of measure of the device.

Coefficient de température pour l'évaluation de l'incertitude de mesure en opération: $10.0 \cdot 10^{-6}$ / K

Plage d'opération sur le site pour l'évaluation de l'incertitude de mesure en opération: 20 K

Linéarisation de l'Équation d'Incertitude

	Plage		Tel que Trouvé	Tel que Laissé
	d	Max		
1	0.05 kg	150 kg	U_1 = 41 g + 0.711 g/kg · R	N/A

To optimize the stability of the linearization, besides of the zero load only increasing measurement points with a test load of 5% of the measurement range or larger are taken for the calculation of the linear equation.

Absolute and Relative Measurement Uncertainty in Use for Various Net Indications (Examples)

Indication Net	Tel que Trouvé		Tel que Laissé	
1.50 kg	0.042 kg	2.8%	N/A	N/A
15.00 kg	0.052 kg	0.34%	N/A	N/A
30.00 kg	0.062 kg	0.21%	N/A	N/A
75.00 kg	0.094 kg	0.13%	N/A	N/A
150.00 kg	0.15 kg	0.098%	N/A	N/A

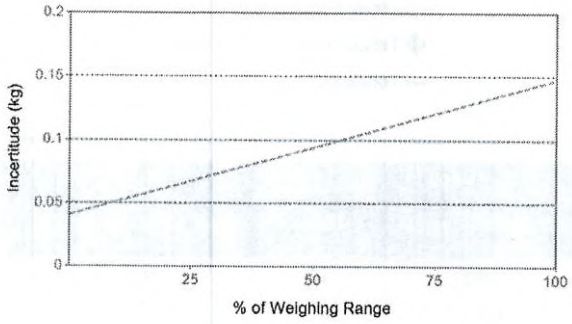

Tel que Trouvé

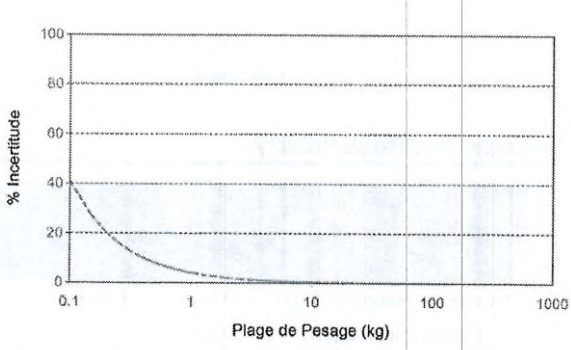

Tel que Laissé

©METTLER TOLEDO
Le document a été fourni par voie électronique.

METTLER TOLEDO Service

Handbook 44 Tolerance Assessment (Entretien)

Assessment done without considering measurement uncertainty.
Les mesures du certificat de calibration joint ont été évaluées selon les tolérances définies par NIST HB44.

	Tel que Trouvé	Tel que Laissé
Global	✓	N/D

✓ = Passed
✗ = Failed

Weighing Device

Range	Max. Capacity	Readability (d)	Verification Scale Interval (e)	Class
1	400 kg	0.05 kg	0.05 kg	III

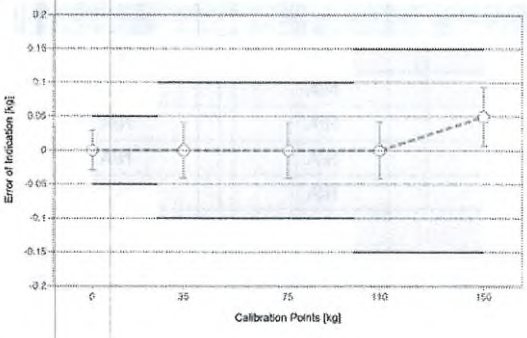

Tolerances according to NIST Handbook 44

Test Load		Tolérance
From	To	
0.00 kg	0.00 kg	0.0125 kg
0.05 kg	25.00 kg	0.05 kg
25.05 kg	100.00 kg	0.1 kg
100.05 kg	150.00 kg	0.15 kg

○ Tel que Trouvé
◆ Tel que Laissé
— Tolérance

Eccentricity and Repeatability

Test	Test Load	Tolérance	As Found		As Left	
			Max. Error / Range	Result	Max. Error / Range	Result
Excentricité (Maximum Error)	50 kg	0.10 kg	0.00 kg	✓	N/D	N/D
Excentricité (Plage)	50 kg	0.1 kg	0.00 kg	✓	N/D	N/D
Répétabilité (Maximum Error)	70 kg	0.1 kg	0.00 kg	✓	N/D	N/D
Répétabilité (Plage)	70 kg	0.10 kg	0.00 kg	✓	N/D	N/D

Max. Error: Maximum of the absolute values of the individual errors.
Range: Difference between largest and smallest measurement value.

Error of Indication

	Reference Value	Tolérance	As Found		As Left	
			Error of Indication	Result	Error of Indication	Result
1	0 kg	0.05 kg	0.00 kg	✓	N/D	N/D
2	35 kg	0.10 kg	0.00 kg	✓	N/D	N/D
3	75 kg	0.10 kg	0.00 kg	✓	N/D	N/D
4	110 kg	0.15 kg	0.00 kg	✓	N/D	N/D
5	150 kg	0.15 kg	0.05 kg	✓	N/D	N/D
6	110 kg	0.15 kg	0.00 kg	✓	N/D	N/D
7	75 kg	0.10 kg	0.00 kg	✓	N/D	N/D
8	35 kg	0.10 kg	0.00 kg	✓	N/D	N/D
9	0 kg	0.05 kg	0.00 kg	✓	N/D	N/D

©METTLER TOLEDO
Le document a été fourni par voie électronique.

Instrumentation Saint•Laurent inc.
Accrédité ISO 17025

CLAS NRC·CNRC
CLAS 2010-02

SCC Accredited LAB
LAB Accrédité CCN
N°669

80 rue de la montagne
St-Joseph du lac
(Québec), J0N 1M0
Tél: (450) 473-6169
Fax: (450) 473-5207
Email: inst.st-laurent@videotron.ca

CERTIFICAT D'ÉTALONNAGE

No.Certificat: CE-EM-126 09/03/20

CLIENT	
Compagnie:	Services Polytests Inc
Adresse:	695 B rue Gaudette
	St-Jean-sur-Richelieu, Québec, J3B 7S7

SPÉCIFICATION DE CALIBRATION	
Procédure de service:	4IN9106
Précision requise:	+\- 1"Hg
Fréquence d'étalonnage: (jours)	365

SPÉCIFICATION DE L'INSTRUMENT			
Type d'instrument:	Manomètre	**Type d'entrée:**	Pression
Manufacturier:	Dwyer	**Type de sortie:**	Digitale
No. Model:	DPG200	**Type de mesure:**	Pression
No. Série:	N.A.	**Gamme:**	0-28"Hg
Emplacement:	N.A.	**No. Machine:**	N.A.

SPÉCIFICATION DE L'ÉTALON			
Étalon Utilisé:	Crystal XP2i	**No. du certificat d'étalonnage:**	2019004641
No. Série:	258139	**Dernière date d'étalonnage:**	12-Jul-19
Certificat fait par:	Alpha Controls	**Prochaine date d'étalonnage:**	12-Jul-20
Commentaire:			

SPÉCIFICATION DE L'ÉTALON			
Étalon Utilisé:	Fluke 744	**No. du certificat d'étalonnage:**	2019007064
No. Série:	8139009	**Dernière date d'étalonnage:**	18-Oct-19
Certificat fait par:	Alpha Controls	**Prochaine date d'étalonnage:**	18-Oct-20
Commentaire:			

RÉSULTAT D'ÉTALONNAGE

Entrée Source	Valeur Donnée	Valeur Actuelle	Erreur de Déviation	Valeur après Étalonnage	Incertitude Élargie	Commentaire
0.00 "Hg	0.00 "Hg	0.00 "Hg	0.00 "Hg	0.00 "Hg	1 "Hg	Vérification indicateur
-7.50 "Hg	-7.50 "Hg	-7.61 "Hg	-0.11 "Hg	-7.61 "Hg	1 "Hg	Vérification indicateur
-15.00 "Hg	-15.00 "Hg	-15.23 "Hg	-0.23 "Hg	-15.23 "Hg	1 "Hg	Vérification indicateur
-22.50 "Hg	-22.50 "Hg	-22.86 "Hg	-0.36 "Hg	-22.86 "Hg	1 "Hg	Vérification indicateur
-28.00 "Hg	-28.00 "Hg	-28.45 "Hg	-0.45 "Hg	-28.45 "Hg	1 "Hg	Vérification indicateur
0.00 "Hg	10.0000 V.DC.	10.0546 V.DC.	+0.0546 V.DC.	10.0546 V.DC.	0.5 V.DC.	Vérification sortie analogique
-7.50 "Hg	8.0000 V.DC.	8.0366 V.DC.	+0.0366 V.DC.	8.0366 V.DC.	0.5 V.DC.	Vérification sortie analogique
-15.00 "Hg	6.0000 V.DC.	6.0071 V.DC.	+0.0071 V.DC.	6.0071 V.DC.	0.5 V.DC.	Vérification sortie analogique
-22.50 "Hg	4.0000 V.DC.	3.9609 V.DC.	-0.0391 V.DC.	3.9609 V.DC.	0.5 V.DC.	Vérification sortie analogique
-28.00 "Hg	2.5333 V.DC.	2.4630 V.DC.	-0.0703 V.DC.	2.4630 V.DC.	0.5 V.DC.	Vérification sortie analogique

Conditions Environnementales: Température: 20 °C Humidité: 23 %RH

Type d'Étalonnage:

5F09106

Le droit d'auteur du présent certificat appartient à Inst. St-Laurent Inc et doit être reproduit intégralement, à moins d'une autorisation écrite de Inst. St-Laurent Inc.

Instrumentation Saint•Laurent inc.
Accrédité ISO 17025

CLAS NRC·CNRC
CLAS 2010-02

SCC Accredited LAB
LAB Accrédité CCN
N°669

80 rue de la montagne
St-Joseph du lac
(Québec), J0N 1M0
Tél: (450) 473-6169
Fax: (450) 473-5207
Email: inst.st-laurent@videotron.ca

CERTIFICAT D'ÉTALONNAGE

No.Certificat: CE-EM-126 09/03/20

CLIENT	
Compagnie:	Services Polytests Inc
Adresse:	695 B rue Gaudette
	St-Jean-sur-Richelieu, Québec, J3B 7S7

SPÉCIFICATION DE CALIBRATION	
Procédure de service:	4IN9106
Précision requise:	+\- 1"Hg
Fréquence d'étalonnage: (jours)	365

SPÉCIFICATION DE L'INSTRUMENT			
Type d'instrument:	Manomètre	**Type d'entrée:**	Pression
Manufacturier:	Dwyer	**Type de sortie:**	Digitale
No. Model:	DPG200	**Type de mesure:**	Pression
No. Série:	N.A.	**Gamme:**	0-28"Hg
Emplacement:	N.A.	**No. Machine:**	N.A.

Instrumentation St-Laurent Inc. Certifie que l'instrument ci-haut, rencontre ou excède les spécifications établies par le fabriquant. Le système qualité de l'entreprise est conforme aux exigences de la norme ISO 17025 et les étalons utilisés pour effectuer l'étalonnage est retraçable au CNRC et/ou au NIST. Le degré d'incertitude est basé sur un niveau de confiance=95%, K=2.

DATE D'ÉTALONNAGE / ÉMISSION DU CERTIFICAT	
Date d'Étalonnage:	9 Mars 2020
Date du prochain Étalonnage:	9 Mars 2021
Date d'émission du certificat:	9 Mars 2020

CONFORMITÉ D'ÉTALONNAGE	Avant	Après
Conforme:	X	X
Non Conforme:		

Le Service d'évaluation des laboratoires d'étalonnage (CLAS) du Conseil national de recherches du Canada (CNRC) a évalué et certifié la capacité d'étalonnage du laboratoire et la traçabilité au Système international d'unités (SI) ou à des étalons acceptables selon le CLAS. Le présent certificat d'étalonnage est délivré conformément aux conditions de certification du CLAS et aux conditions d'accréditation du Conseil canadien des normes (CCN). Numéro d'accréditation du CCN: # 669. Le CLAS et le CCN ne garantissent pas l'exactitude des étalonnages individuels effectués par les laboratoires accrédités.

Martin Langlais - Technicien

2020 MARS 30

5F09106

Le droit d'auteur du présent certificat appartient à Inst. St-Laurent Inc et doit être reproduit intégralement, à moins d'une autorisation écrite de Inst. St-Laurent Inc.

Instrumentation Saint•Laurent inc.
Accrédité ISO 17025

CLAS NRC·CNRC
CLAS 2010-02

SCC Accredited LAB
LAB Accrédité CCN
N°669

80 rue de la montagne
St-Joseph du lac
(Québec), J0N 1M0
Tél: (450) 473-6169
Fax: (450) 473-5207
Email: inst.st-laurent@videotron.ca

CERTIFICAT D'ÉTALONNAGE

No.Certificat: CE-EM-127 09/03/20

CLIENT	
Compagnie:	Services Polytests Inc
Adresse:	695 B rue Gaudette
	St-Jean-sur-Richelieu, Québec, J3B 7S7

SPÉCIFICATION DE CALIBRATION	
Procédure de service:	4IN9106
Précision requise:	+\- 1"Hg
Fréquence d'étalonnage: (jours)	365

SPÉCIFICATION DE L'INSTRUMENT			
Type d'instrument:	Manomètre	**Type d'entrée:**	Pression
Manufacturier:	Dwyer	**Type de sortie:**	Digitale
No. Model:	DPG200	**Type de mesure:**	Pression
No. Série:	N.A.	**Gamme:**	0-28"Hg
Emplacement:	N.A.	**No. Machine:**	N.A.

SPÉCIFICATION DE L'ÉTALON			
Étalon Utilisé:	Crystal XP2i	**No. du certificat d'étalonnage:**	2019004641
No. Série:	258139	**Dernière date d'étalonnage:**	12-Jul-19
Certificat fait par:	Alpha Controls	**Prochaine date d'étalonnage:**	12-Jul-20
Commentaire:			

SPÉCIFICATION DE L'ÉTALON			
Étalon Utilisé:	Fluke 744	**No. du certificat d'étalonnage:**	2019007064
No. Série:	8139009	**Dernière date d'étalonnage:**	18-Oct-19
Certificat fait par:	Alpha Controls	**Prochaine date d'étalonnage:**	18-Oct-20
Commentaire:			

RÉSULTAT D'ÉTALONNAGE

Entrée Source	Valeur Donnée	Valeur Actuelle	Erreur de Déviation	Valeur après Étalonnage	Incertitude Élargie	Commentaire
0.00 "Hg	0.00 "Hg	0.00 "Hg	0.00 "Hg	0.00 "Hg	1 "Hg	Vérification indicateur
-7.50 "Hg	-7.50 "Hg	-7.51 "Hg	-0.01 "Hg	-7.51 "Hg	1 "Hg	Vérification indicateur
-15.00 "Hg	-15.00 "Hg	-15.03 "Hg	-0.03 "Hg	-15.03 "Hg	1 "Hg	Vérification indicateur
-22.50 "Hg	-22.50 "Hg	-22.57 "Hg	-0.07 "Hg	-22.57 "Hg	1 "Hg	Vérification indicateur
-28.00 "Hg	-28.00 "Hg	-28.10 "Hg	-0.10 "Hg	-28.10 "Hg	1 "Hg	Vérification indicateur
0.00 "Hg	10.0000 V.DC.	9.9990 V.DC.	-0,0010 V.DC.	9,9990 V.DC.	0.5 V.DC.	Vérification sortie analogique
-7.50 "Hg	8.0000 V.DC.	8.0128 V.DC.	+0.0128 V.DC.	8.0128 V.DC.	0.5 V.DC.	Vérification sortie analogique
-15.00 "Hg	6.0000 V.DC.	6.0177 V.DC.	+0.0177 V.DC.	6.0177 V.DC.	0.5 V.DC.	Vérification sortie analogique
-22.50 "Hg	4.0000 V.DC.	3.9973 V.DC.	-0.0027 V.DC.	3.9973 V.DC.	0.5 V.DC.	Vérification sortie analogique
-28.00 "Hg	2.5333 V.DC.	2.5184 V.DC.	-0.0149 V.DC.	2.5184 V.DC.	0.5 V.DC.	Vérification sortie analogique

Conditions Environnementales: Température: 20 °C Humidité: 23 %RH

Type d'Étalonnage:

5F09106

Le droit d'auteur du présent certificat appartient à Inst. St-Laurent Inc et doit être reproduit intégralement, à moins d'une autorisation écrite de Inst. St-Laurent Inc.

Instrumentation Saint•Laurent inc.
Accrédité ISO 17025

CLAS NRC·CNRC
CLAS 2010-02

SCC Accredited LAB
LAB Accrédité CCN
N°669

80 rue de la montagne
St-Joseph du lac
(Québec), J0N 1M0
Tél: (450) 473-6169
Fax: (450) 473-5207
Email: inst.st-laurent@videotron.ca

CERTIFICAT D'ÉTALONNAGE

No.Certificat: CE-EM-127 09/03/20

CLIENT	
Compagnie:	Services Polytests Inc
Adresse:	695 B rue Gaudette
	St-Jean-sur-Richelieu, Québec, J3B 7S7

SPÉCIFICATION DE CALIBRATION	
Procédure de service:	4IN9106
Précision requise:	+\- 1"Hg
Fréquence d'étalonnage: (jours)	365

SPÉCIFICATION DE L'INSTRUMENT			
Type d'instrument:	Manomètre	**Type d'entrée:**	Pression
Manufacturier:	Dwyer	**Type de sortie:**	Digitale
No. Model:	DPG200	**Type de mesure:**	Pression
No. Série:	N.A.	**Gamme:**	0-28"Hg
Emplacement:	N.A.	**No. Machine:**	N.A.

Instrumentation St-Laurent Inc. Certifie que l'instrument ci-haut, rencontre ou excède les spécifications établies par le fabriquant. Le système qualité de l'entreprise est conforme aux exigences de la norme ISO 17025 et les étalons utilisés pour effectuer l'étalonnage est retraçable au CNRC et/ou au NIST. Le degré d'incertitude est basé sur un niveau de confiance=95%, K=2.

DATE D'ÉTALONNAGE / ÉMISSION DU CERTIFICAT	
Date d'Étalonnage:	9 Mars 2020
Date du prochain Étalonnage:	9 Mars 2021
Date d'émission du certificat:	9 Mars 2020

CONFORMITÉ D'ÉTALONNAGE	Avant	Après
Conforme:	X	X
Non Conforme:		

Le Service d'évaluation des laboratoires d'étalonnage (CLAS) du Conseil national de recherches du Canada (CNRC) a évalué et certifié la capacité d'étalonnage du laboratoire et la traçabilité au Système international d'unités (SI) ou à des étalons acceptables selon le CLAS. Le présent certificat d'étalonnage est délivré conformément aux conditions de certification du CLAS et aux conditions d'accréditation du Conseil canadien des normes (CCN). Numéro d'accréditation du CCN: # 669. Le CLAS et le CCN ne garantissent pas l'exactitude des étalonnages individuels effectués par les laboratoires accrédités.

Martin Langlais - Technicien

2020-03-30

5F09106

Le droit d'auteur du présent certificat appartient à Inst. St-Laurent Inc et doit être reproduit intégralement, à moins d'une autorisation écrite de Inst. St-Laurent Inc.

DISPERSION
Laboratoire • Laboratory DIVISION TRANSCAT CANADA

CLAS
NRC·CNRC
CLAS 2010-01

CERTIFICAT D'ÉTALONNAGE

9900 Chemin de la Côte-de-Liesse, Lachine, QC H8T 1A1
www.dispersion.ca 1.866.390.5066

Client :	Polytests	**No. du Certificat :**	**152-4BB901-182**
Adresse :	695 B rue Gaudette St-Jean-sur-Richelieu, QC J3B7S7	**Date d'étalonnage :**	09-01-2018

Technicien:
Simeonidis, Georgios

David Llorens, Responsable Qualité

DESCRIPTION DU SERVICE:

Description des masses :	ASTM E617	**Date d'approbation :**	09-01-2018
Classe de précision :	ASTM 1	**Date prochain étalonnage :**	09-01-2023
Densité :	7.95g/cm³	**Accrédtation CCN n. :**	668
Identification (si unique) :	(items multiples)	**Certification CLAS n. :**	2010-01

Condition d'essai :	Temp °C:	21.265	Pression kPa:	101.565	Humidité:	49.58

NOTES:

Pour l'étalonnage des masses, nous utilisons la procédure "Comparaison individuelle" PDL-09-MG-001 et la procédure "Détermination des incertitudes" PDL-09-MG-002. Le droit d'auteur du présent certificat appartient au laboratoire délivreur et doit être reproduit intégralement, à moins d'une autorisation écrite du laboratoire délivreur.

REMARQUES:

11 JAN. 2018

DISPERSION
Laboratoire • Laboratory DIVISION • TRANSCAT CANADA

CLAS
NRC·CNRC
CLAS 2010-01

CERTIFICAT D'ÉTALONNAGE

9900 Chemin de la Côte-de-Liesse, Lachine, QC H8T 1A1
www.dispersion.ca 1.866.390.5066

Client :	Polytests	**No. du Certificat :**	**152-4BB901-182**
Adresse :	695 B rue Gaudette	**Accrédtation CCN n. :**	668
	St-Jean-sur-Richelieu, QC	**Certification CLAS n. :**	2010-01
	J3B7S7	**Classe d'exactitude :**	ASTM 1
		Date d'étalonnage :	09-01-2018
Masse :	100 mg - 200 g	**Date du prochain étalonnage :**	09-01-2023

RÉSULTAT DE L'ÉTALONNAGE, MASSE CONVENTIONNELLE:

Valeur Nominale	No de série	No d'inventaire	Masse conventionnelle	Masse conventionnelle après ajustement	Tolérance ± (mg)	Incertitudes ± (mg)
100 mg	1000014200	EM-128	99.9993 mg		0.010 mg	0.002 mg
200 g	1000026013	EM-129	199.99962 g		0.50 mg	0.10 mg

D.P.

DISPERSION
Laboratoire • Laboratory DIVISION • TRANSCAT CANADA

CLAS 2010-01

CERTIFICAT D'ÉTALONNAGE

9900 Chemin de la Côte-de-Liesse, Lachine, QC H8T 1A1
www.dispersion.ca 1.866.390.5066

Client :	Polytests	**No. du Certificat :**	**152-4BB901-182**
Adresse :	695 B rue Gaudette	**Accréditation CCN n. :**	668
	St-Jean-sur-Richelieu, QC	**Certification CLAS n. :**	2010-01
	J3B7S7	**Classe d'exactitude :**	ASTM 1
		Date d'étalonnage :	09-01-2018
Masse :	100 mg - 200 g	**Date du prochain étalonnage :**	09-01-2023

RÉSULTAT DE L'ÉTALONNAGE DES POIDS, CORRECTIONS:

Valeur Nominale	No de série	No d'inventaire	Masse conventionnelle Correction	Masse conventionnelle Correction après ajustement	Tolérance ± (mg)	Incertitudes ± (mg)
100 mg	1000014200	EM-128	-0.0007 mg		0.010 mg	0.002 mg
200 g	1000026013	EM-129	-0.38 mg		0.50 mg	0.10 mg

D.P.

9900 Chemin de la Côte-de-Liesse, Lachine, QC H8T 1A1
www.dispersion.ca 1.866.390.5066

BALANCES UTILISÉES

Pour l'étalonnage manuel :

> 5 kg à 25 kg :	Mettler Toledo XP32003L, SNR 1123271214, max. 32100 g, d = 0.005 g
> 1 kg à 5 kg	Mettler Toledo PR5003, SNR 1115311634, max. 5100 g, d = 0.001 g
> 300 g à 2 kg :	Mettler Toledo XP2004S, SNR B131185222, max. 2100 g, d = 0.1 mg
> 100 g à 200 g :	Mettler Toledo AT201 SNR BA1115230146, max. 205 g, d = 0.01 mg
> 5 g à 100 g :	Mettler Toledo AX106 SNR 1127063924, max. 111 g, d = 1 µg
1 mg à 5 g :	Mettler UMX5, SNR 1121103055, max. 5.1 g, d = 0.1 µg

Pour l'étalonnage automatisé :

> 200 g à 1 kg :	Mettler Toledo AX1005 SNR 1127063210, max. 1109 g, d = 0.01 mg
> 5 g à 100 g :	Mettler Toledo AX106 SNR 1120143015, max. 111 g, d = 1 µg
1 mg à 5 g :	Mettler UMX5, SNR 1125140561, max. 5.1 g, d = 0.1 µg

Les balances sont vérifiées selon notre procédure de contrôle périodique PDL-11-MG-001.

INCERTITUDES:

Les incertitudes que nous retrouvons comprennent :

1. *L'incertitude associée à l'opération de pesage.*
2. *L'incertitude associée à la densité de l'air.*
3. *L'incertitude associée à l'étalon utilisé.*
4. *L'incertitude associée à la densité de la masse à être étalonnée.*

L'incertitude de l'opération de pesage comprend la reproductibilité à long terme.

Les incertitudes précisées dans ce rapport sont des incertitudes élargies représentant un niveau de confiance d'approximativement 95 %, obtenu en multipliant ensemble l'incertitude-type composée par un facteur de couverture de k = 2. Pour de plus amples renseignements, veuillez consulter la publication GUM (Guide pour l'expression de l'incertitude de mesure, édition de 1995).

TRAÇABILITÉ

Le Service d'évaluation de laboratoires d'étalonnage (CLAS) du Conseil national de recherches du Canada (CNRC) a évalué et a certifié des capacités d'étalonnage spécifiques de ce laboratoire et leur traçabilité à des étalons nationaux de mesure reconnus et au Système international d'unités (SI). Ce certificat d'étalonnage est émis conformément aux conditions de certification accordées par CLAS et aux conditions d'accréditation accordées par le Conseil canadien des normes (CCN). Le CLAS pas plus que le CCN ne peut garantir l'exactitude des étalonnages individuels effectués par des laboratoires accrédités.

B.P.

CERTIFICAT D'ÉTALONNAGE

9900 Chemin de la Côte-de-Liesse, Lachine, QC H8T 1A1
www.dispersion.ca 1.866.390.5066

RÉFÉRENCES UTILISÉES

Poids	No de série	Fabricant	Date d'étalonnage	Date due
20kg	69976	Troemner	30-05-2017	30-05-2018
5kg	129099	Mettler Toledo	02-09-2017	02-09-2018
5kg	96-0888-50-3	Denver Instrument Company	02-09-2017	02-09-2018
2kg	129098	Mettler Toledo	02-09-2017	02-09-2018
2kg	96-0888-50-3	Denver Instrument Company	02-09-2017	02-09-2018
300g	96-0888-50-2	Denver Instrument Company	02-09-2017	02-09-2018
1kg - 1mg	MT-01	Mettler Toledo	02-09-2017	02-09-2018

ÉTALONS CERTFIÉS PAR LE CNRC(**Référence NRC MS-2016-0021**)

Poids	No de série	Fabricant	Date d'étalonnage	Date due
100g	95170	Mettler Toledo	17-10-2016	17-10-2018
10kg	129100	Mettler Toledo	17-10-2016	17-10-2018
1kg	95171	Mettler Toledo	17-10-2016	17-10-2018

RÉFÉRENCES DE LA STATION ROBOTISÉE

Poids	No de série	Fabricant	Date d'étalonnage	Date due
1kg - 1mg	DK000A132	Laboratoire Dispersion	01-08-2017	01-08-2018

S.P.

Instrumentation Saint•Laurent inc.
Accrédité ISO 17025

CLAS NRC·CNRC
CLAS 2010-02

SCC Accredited LAB
LAB Accrédité CCN
N°669

80 rue de la montagne
St-Joseph du lac
(Québec), J0N 1M0
Tél: (450) 473-6169
Fax: (450) 473-5207
Email: inst.st-laurent@videotron.ca

CERTIFICAT D'ÉTALONNAGE

No.Certificat: CE-EM-147 09/03/20

CLIENT	
Compagnie:	Services Polytests Inc
Adresse:	695 B rue Gaudette
	St-Jean-sur-Richelieu, Québec, J3B 7S7

SPÉCIFICATION DE CALIBRATION	
Procédure de service:	4IN9101
Précision requise:	+\- 2.0C
Fréquence d'étalonnage: (jours)	365

SPÉCIFICATION DE L'INSTRUMENT			
Type d'instrument:	Enregistreur	**Type d'entrée:**	Divers
Manufacturier:	Keithley	**Type de sortie:**	Digital
No. Model:	2700	**Type de mesure:**	Température
No. Série:	1349443	**Gamme:**	Divers
Emplacement:	N.A.	**No. Machine:**	N.A.

SPÉCIFICATION DE L'ÉTALON			
Étalon Utilisé:	Fluke 744	**No. du certificat d'étalonnage:**	2019007064
No. Série:	8139009	**Dernière date d'étalonnage:**	18-Oct-19
Certificat fait par:	Alpha Controls	**Prochaine date d'étalonnage:**	18-Oct-20
Commentaire:			

RÉSULTAT D'ÉTALONNAGE

Entrée Source	Valeur Donnée	Valeur Actuelle	Erreur de Déviation	Valeur après Étalonnage	Incertitude Élargie	Commentaire
Voir Commentaire						

Conditions Environnementales: Température: 20 °C Humidité: 23 %RH

Type d'Étalonnage: Data Acquisition system Conforme

Les 2 slot de l'enregistreur ont été vérifié.

Instrumentation St-Laurent Inc. Certifie que l'instrument ci-haut, rencontre ou excède les spécifications établies par le fabriquant. Le système qualité de l'entreprise est conforme aux exigences de la norme ISO 17025 et les étalons utilisés pour effectuer l'étalonnage est retraçable au CNRC et/ou au NIST. Le degré d'incertitude est basé sur un niveau de confiance=95%, K=2.

DATE D'ÉTALONNAGE / ÉMISSION DU CERTIFICAT	
Date d'Étalonnage:	9 Mars 2020
Date du prochain Étalonnage:	9 Mars 2021
Date d'émission du certificat:	9 Mars 2020

CONFORMITÉ D'ÉTALONNAGE	Avant	Après
Conforme:	X	X
Non Conforme:		

Le Service d'évaluation des laboratoires d'étalonnage (CLAS) du Conseil national de recherches du Canada (CNRC) a évalué et certifié la capacité d'étalonnage du laboratoire et la traçabilité au Système international d'unités (SI) ou à des étalons acceptables selon le CLAS. Le présent certificat d'étalonnage est délivré conformément aux conditions de certification du CLAS et aux conditions d'accréditation du Conseil canadien des normes (CCN). Numéro d'accréditation du CCN: # 669. Le CLAS et le CCN ne garantissent pas l'exactitude des étalonnages individuels effectués par les laboratoires accrédités.

Martin Langlais - Technicien

2020 - MAVS 30

5F09101

Le droit d'auteur du présent certificat appartient à Inst. St-Laurent Inc et doit être reproduit intégralement, à moins d'une autorisation écrite de Inst. St-Laurent Inc.

Instrumentation Saint•Laurent inc.
Accrédité ISO 17025

CLAS NRC·CNRC CLAS 2010-02

SCC Accredited LAB
LAB Accrédité CCN N°669

80 rue de la montagne
St-Joseph du lac
(Québec), J0N 1M0
Tél: (450) 473-6169
Fax: (450) 473-5207
Email: inst.st-laurent@videotron.ca

CERTIFICAT D'ÉTALONNAGE

No.Certificat: CE-EM-249 23/03/20

CLIENT	
Compagnie:	Services Polytests Inc
Adresse:	695 B rue Gaudette
	St-Jean-sur-Richelieu, Québec, J3B 7S7

SPÉCIFICATION DE CALIBRATION	
Procédure de service:	4IN9106
Précision requise:	+/- 0.25 "H2O
Fréquence d'étalonnage: (jours)	365

SPÉCIFICATION DE L'INSTRUMENT			
Type d'instrument:	Indicateur	**Type d'entrée:**	Pression
Manufacturier:	Dwyer	**Type de sortie:**	Voltage
No. Model:	MS-321-LCD	**Type de mesure:**	Pression
No. Série:	N/A	**Gamme:**	0 à 0.10 "H2O
Emplacement:	Banc de test	**No. Machine:**	N/A

SPÉCIFICATION DE L'ÉTALON			
Étalon Utilisé:	Setra	**No. du certificat d'étalonnage:**	2020001510
No. Série:	2784759	**Dernière date d'étalonnage:**	5-Mar-20
Certificat fait par:	Alpha Controls	**Prochaine date d'étalonnage:**	5-Mar-21
Commentaire:			

SPÉCIFICATION DE L'ÉTALON			
Étalon Utilisé:	Fluke 744	**No. du certificat d'étalonnage:**	2019007064
No. Série:	8139009	**Dernière date d'étalonnage:**	18-Oct-19
Certificat fait par:	Alpha Controls	**Prochaine date d'étalonnage:**	18-Oct-20
Commentaire:			

RÉSULTAT D'ÉTALONNAGE

Entrée Source	Valeur Donnée	Valeur Actuelle	Erreur de Déviation	Valeur après Étalonnage	Incertitude Élargie	Commentaire
0.0000 "H2O	0.0000 "H2O	0.0002 "H2O	0.0002 "H2O	0.0002 "H2O	0.25 "H2O	Vérification indicateur
0.0250 "H2O	0.0250 "H2O	0.0241 "H2O	-0.0009 "H2O	0.0241 "H2O	0.25 "H2O	Vérification indicateur
0.0500 "H2O	0.0500 "H2O	0.0530 "H2O	0.0030 "H2O	0.0530 "H2O	0.25 "H2O	Vérification indicateur
0.0750 "H2O	0.0750 "H2O	0.0745 "H2O	-0.0005 "H2O	0.0745 "H2O	0.25 "H2O	Vérification indicateur
0.1000 "H2O	0.1000 "H2O	0.0984 "H2O	-0.0016 "H2O	0.0984 "H2O	0.25 "H2O	Vérification indicateur
0.0000 "H2O	0.0000 V.DC.	0.0006 V.DC.	+0.0006 V.DC.	0.0006 V.DC.	0.5 V.DC.	Vérification sortie analogique
0.0250 "H2O	2.5000 V.DC.	2.4667 V.DC.	-0.0333 V.DC.	2.4667 V.DC.	0.5 V.DC.	Vérification sortie analogique
0.0500 "H2O	5.0000 V.DC.	5.0312 V.DC.	0.0312 V.DC.	5.0312 V.DC.	0.5 V.DC.	Vérification sortie analogique
0.0750 "H2O	7.5000 V.DC.	7.4588 V.DC.	-0.0412 V.DC.	7.4588 V.DC.	0.5 V.DC.	Vérification sortie analogique
0.1000 "H2O	10.0000 V.DC.	9.8590 V.DC.	-0.1410 V.DC.	9.8590 V.DC.	0.5 V.DC.	Vérification sortie analogique

Conditions Environnementales: Température: 20 °C Humidité: 31 %RH

Type d'Étalonnage:

5F09106

Le droit d'auteur du présent certificat appartient à Inst. St-Laurent Inc et doit être reproduit intégralement, à moins d'une autorisation écrite de Inst. St-Laurent Inc.

Instrumentation Saint•Laurent inc.
Accrédité ISO 17025

CLAS NRC·CNRC
CLAS 2010-02

SCC Accredited LAB
LAB Accrédité CCN
N°669

80 rue de la montagne
St-Joseph du lac
(Québec), J0N 1M0
Tél: (450) 473-6169
Fax: (450) 473-5207
Email: inst.st-laurent@videotron.ca

CERTIFICAT D'ÉTALONNAGE

No.Certificat: CE-EM-249 23/03/20

CLIENT	
Compagnie:	Services Polytests Inc
Adresse:	695 B rue Gaudette
	St-Jean-sur-Richelieu, Québec, J3B 7S7

SPÉCIFICATION DE CALIBRATION	
Procédure de service:	4IN9106
Précision requise:	+/- 0.25 "H2O
Fréquence d'étalonnage: (jours)	365

SPÉCIFICATION DE L'INSTRUMENT			
Type d'instrument:	Indicateur	**Type d'entrée:**	Pression
Manufacturier:	Dwyer	**Type de sortie:**	Voltage
No. Model:	MS-321-LCD	**Type de mesure:**	Pression
No. Série:	N/A	**Gamme:**	0 à 0.10 "H2O
Emplacement:	Banc de test	**No. Machine:**	N/A

Instrumentation St-Laurent Inc. Certifie que l'instrument ci-haut, rencontre ou excède les spécifications établies par le fabriquant. Le système qualité de l'entreprise est conforme aux exigences de la norme ISO 17025 et les étalons utilisés pour effectuer l'étalonnage est retraçable au CNRC et/ou au NIST. Le degré d'incertitude est basé sur un niveau de confiance=95%, K=2.

DATE D'ÉTALONNAGE / ÉMISSION DU CERTIFICAT	
Date d'Étalonnage:	23 Mars 2020
Date du prochain Étalonnage:	23 Mars 2021
Date d'émission du certificat:	23 Mars 2020

CONFORMITÉ D'ÉTALONNAGE	Avant	Après
Conforme:	X	X
Non Conforme:		

Le Service d'évaluation des laboratoires d'étalonnage (CLAS) du Conseil national de recherches du Canada (CNRC) a évalué et certifié la capacité d'étalonnage du laboratoire et la traçabilité au Système international d'unités (SI) ou à des étalons acceptables selon le CLAS. Le présent certificat d'étalonnage est délivré conformément aux conditions de certification du CLAS et aux conditions d'accréditation du Conseil canadien des normes (CCN). Numéro d'accréditation du CCN: # 669. Le CLAS et le CCN ne garantissent pas l'exactitude des étalonnages individuels effectués par les laboratoires accrédités.

Martin Langlais - Technicien

2020 MARS 30

5F09106

Le droit d'auteur du présent certificat appartient à Inst. St-Laurent Inc et doit être reproduit intégralement, à moins d'une autorisation écrite de Inst. St-Laurent Inc.

Instrumentation Saint•Laurent inc.
Accrédité ISO 17025

CLAS ARC·CARC CLAS 2010-02

SCC Accredited LAB Accrédité CCN N°669

80 rue de la montagne
St-Joseph du lac
(Québec), J0N 1M0
Tél: (450) 473-6169
Fax: (450) 473-5207
Email: inst.st-laurent@videotron.ca

CERTIFICAT D'ÉTALONNAGE

No.Certificat: CE-EM-001 10/03/20

CLIENT	
Compagnie:	Services Polytests Inc
Adresse:	695 B rue Gaudette
	St-Jean-sur-Richelieu, Québec, J3B 7S7

SPÉCIFICATION DE CALIBRATION	
Procédure de service:	4IN9101
Précision requise:	+\- 2.0°C
Fréquence d'étalonnage: (jours)	365

SPÉCIFICATION DE L'INSTRUMENT			
Type d'instrument:	Indicateur	**Type d'entrée:**	Temp
Manufacturier:	Fluke	**Type de sortie:**	Digitale
No. Model:	52-II	**Type de mesure:**	Température
No. Série:	90630037	**Gamme:**	Divers
Emplacement:	N.A.	**No. Machine:**	N.A.

SPÉCIFICATION DE L'ÉTALON			
Étalon Utilisé:	Fluke 744	**No. du certificat d'étalonnage:**	2019007064
No. Série:	8139009	**Dernière date d'étalonnage:**	18-Oct-19
Certificat fait par:	Alpha Controls	**Prochaine date d'étalonnage:**	18-Oct-20
Commentaire:			

RÉSULTAT D'ÉTALONNAGE

Entrée Source	Valeur Donnée	Valeur Actuelle	Erreur de Déviation	Valeur après Étalonnage	Incertitude Élargie	Commentaire
0.0 °C	0.0 °C	-0.1 °C	-0.1 °C	-0.1 °C	1.0 °C	T1 typeJ
125.0 °C	125.0 °C	125.0 °C	0.0 °C	125.0 °C	1.0 °C	T1 typeJ
250.0 °C	250.0 °C	250.0 °C	0.0 °C	250.0 °C	1.0 °C	T1 typeJ
375.0 °C	375.0 °C	374.9 °C	-0.1 °C	374.9 °C	1.0 °C	T1 typeJ
500.0 °C	500.0 °C	500.0 °C	0.0 °C	500.0 °C	1.0 °C	T1 typeJ
0.0 °C	0.0 °C	0.0 °C	0.0 °C	0.0 °C	1.0 °C	T2 typeJ
125.0 °C	125.0 °C	125.0 °C	0.0 °C	125.0 °C	1.0 °C	T2 typeJ
250.0 °C	250.0 °C	250.0 °C	0.0 °C	250.0 °C	1.0 °C	T2 typeJ
375.0 °C	375.0 °C	375.0 °C	0.0 °C	375.0 °C	1.0 °C	T2 typeJ
500.0 °C	500.0 °C	500.0 °C	0.0 °C	500.0 °C	1.0 °C	T2 typeJ
0.0 °C	0.0 °C	0.2 °C	+0.2 °C	0.2 °C	1.0 °C	T1 typeK
125.0 °C	125.0 °C	125.2 °C	+0.2 °C	125.2 °C	1.0 °C	T1 typeK
250.0 °C	250.0 °C	250.1 °C	+0.1 °C	250.1 °C	1.0 °C	T1 typeK
375.0 °C	375.0 °C	375.2 °C	+0.2 °C	375.2 °C	1.0 °C	T1 typeK
500.0 °C	500.0 °C	500.1 °C	+0.1 °C	500.1 °C	1.0 °C	T1 typeK
0.0 °C	0.0 °C	0.2 °C	+0.2 °C	0.2 °C	1.0 °C	T2 typeK
125.0 °C	125.0 °C	125.2 °C	+0.2 °C	125.2 °C	1.0 °C	T2 typeK
250.0 °C	250.0 °C	250.2 °C	+0.2 °C	250.2 °C	1.0 °C	T2 typeK
375.0 °C	375.0 °C	375.2 °C	+0.2 °C	375.2 °C	1.0 °C	T2 typeK
500.0 °C	500.0 °C	500.1 °C	+0.1 °C	500.1 °C	1.0 °C	T2 typeK

Conditions Environnementales: Température: 20 °C Humidité: 23 %RH

Type d'Étalonnage:

5F09101

Le droit d'auteur du présent certificat appartient à Inst. St-Laurent Inc et doit être reproduit intégralement, à moins d'une autorisation écrite de Inst. St-Laurent Inc.

Instrumentation Saint•Laurent inc.
Accrédité ISO 17025

CLAS NRC·CNRC
CLAS 2010-02

SCC Accredited LAB
LAB Accrédité CCN
N°669

80 rue de la montagne
St-Joseph du lac
(Québec), J0N 1M0
Tél: (450) 473-6169
Fax: (450) 473-5207
Email: inst.st-laurent@videotron.ca

CERTIFICAT D'ÉTALONNAGE

No.Certificat: CE-EM-001 10/03/20

CLIENT	
Compagnie:	Services Polytests Inc
Adresse:	695 B rue Gaudette
	St-Jean-sur-Richelieu, Québec, J3B 7S7

SPÉCIFICATION DE CALIBRATION	
Procédure de service:	4IN9101
Précision requise:	+\- 2.0°C
Fréquence d'étalonnage: (jours)	365

SPÉCIFICATION DE L'INSTRUMENT			
Type d'instrument:	Indicateur	**Type d'entrée:**	Temp
Manufacturier:	Fluke	**Type de sortie:**	Digitale
No. Model:	52-II	**Type de mesure:**	Température
No. Série:	90630037	**Gamme:**	Divers
Emplacement:	N.A.	**No. Machine:**	N.A.

Instrumentation St-Laurent Inc. Certifie que l'instrument ci-haut, rencontre ou excède les spécifications établies par le fabriquant. Le système qualité de l'entreprise est conforme aux exigences de la norme ISO 17025 et les étalons utilisés pour effectuer l'étalonnage est retraçable au CNRC et/ou au NIST. Le degré d'incertitude est basé sur un niveau de confiance=95%, K=2.

DATE D'ÉTALONNAGE / ÉMISSION DU CERTIFICAT	
Date d'Étalonnage:	10 Mars 2020
Date du prochain Étalonnage:	10 Mars 2021
Date d'émission du certificat:	10 Mars 2020

CONFORMITÉ D'ÉTALONNAGE	Avant	Après
Conforme:	X	X
Non Conforme:		

Le Service d'évaluation des laboratoires d'étalonnage (CLAS) du Conseil national de recherches du Canada (CNRC) a évalué et certifié la capacité d'étalonnage du laboratoire et la traçabilité au Système international d'unités (SI) ou à des étalons acceptables selon le CLAS. Le présent certificat d'étalonnage est délivré conformément aux conditions de certification du CLAS et aux conditions d'accréditation du Conseil canadien des normes (CCN). Numéro d'accréditation du CCN: # 669. Le CLAS et le CCN ne garantissent pas l'exactitude des étalonnages individuels effectués par les laboratoires accrédités.

Martin Langlais - Technicien

2020 MARS 30

5F09101

Le droit d'auteur du présent certificat appartient à Inst. St-Laurent Inc et doit être reproduit intégralement, à moins d'une autorisation écrite de Inst. St-Laurent Inc.

Instrumentation Saint•Laurent inc.
Accrédité ISO 17025

CLAS NRC·CNRC
CLAS 2010-02

SCC Accredited LAB
LAB Accrédité CCN
N°669

80 rue de la montagne
St-Joseph du lac
(Québec), J0N 1M0
Tél: (450) 473-6169
Fax: (450) 473-5207
Email: inst.st-laurent@videotron.ca

CERTIFICAT D'ÉTALONNAGE

No.Certificat: CE-EM-015 09/03/20

CLIENT	
Compagnie:	Services Polytests Inc
Adresse:	695 B rue Gaudette
	St-Jean-sur-Richelieu, Québec, J3B 7S7

SPÉCIFICATION DE CALIBRATION	
Procédure de service:	4IN9101
Précision requise:	+\- 2°C
Fréquence d'étalonnage: (jours)	365

SPÉCIFICATION DE L'INSTRUMENT			
Type d'instrument:	Enregistreur	**Type d'entrée:**	Temp
Manufacturier:	Keithley	**Type de sortie:**	Digitale
No. Model:	7700	**Type de mesure:**	Température
No. Série:	1213648	**Gamme:**	Divers
Emplacement:	N/A	**No. Machine:**	N.A.

SPÉCIFICATION DE L'ÉTALON			
Étalon Utilisé:	Fluke 744	**No. du certificat d'étalonnage:**	2019007064
No. Série:	8139009	**Dernière date d'étalonnage:**	18-Oct-19
Certificat fait par:	Alpha Controls	**Prochaine date d'étalonnage:**	18-Oct-20
Commentaire:			

RÉSULTAT D'ÉTALONNAGE

Entrée Source	Valeur Donnée	Valeur Actuelle	Erreur de Déviation	Valeur après Étalonnage	Incertitude Élargie	Commentaire
-190.0 °C	-190.0 °C	-189.2 °C	0.8 °C	-189.2 °C	1.0 °C	Input#1TypeK
0.0 °C	0.0 °C	0.0 °C	0.0 °C	0.0 °C	1.0 °C	Input#1TypeK
750.0 °C	750.0 °C	749.9 °C	-0.1 °C	749.9 °C	1.0 °C	Input#1TypeK
100.0 °C	100.0 °C	100.1 °C	+0.1 °C	100.1 °C	1.0 °C	Input#2 TypeK
100.0 °C	100.0 °C	100.6 °C	+0.6 °C	100.6 °C	1.0 °C	Input#3 TypeK
100.0 °C	100.0 °C	101.0 °C	+1.0 °C	101.0 °C	1.0 °C	Input#4 TypeK
100.0 °C	100.0 °C	101.5 °C	+1.5 °C	101.5 °C	1.0 °C	Input#5TypeK
100.0 °C	100.0 °C	101.5 °C	+1.5 °C	101.5 °C	1.0 °C	Input#6TypeK
100.0 °C	100.0 °C	101.8 °C	+1.8 °C	101.8 °C	1.0 °C	Input#7TypeK
100.0 °C	100.0 °C	101.5 °C	+1.5 °C	101.5 °C	1.0 °C	Input#8TypeK
100.0 °C	100.0 °C	101.5 °C	+1.5 °C	101.5 °C	1.0 °C	Input#9TypeK
100.0 °C	100.0 °C	101.2 °C	+1.2 °C	101.2 °C	1.0 °C	Input#10TypeJ
100.0 °C	100.0 °C	101.0 °C	+1.0 °C	101.0 °C	1.0 °C	Input#11TypeJ
100.0 °C	100.0 °C	100.8 °C	+0.8 °C	100.8 °C	1.0 °C	Input#12TypeJ
100.0 °C	100.0 °C	100.7 °C	+0.7 °C	100.7 °C	1.0 °C	Input#13 TypeJ
100.0 °C	100.0 °C	100.6 °C	+0.6 °C	100.6 °C	1.0 °C	Input#14TypeJ
100.0 °C	100.0 °C	100.5 °C	+0.5 °C	100.5 °C	1.0 °C	Input#15 TypeJ
100.0 °C	100.0 °C	100.3 °C	+0.3 °C	100.3 °C	1.0 °C	Input#16TypeJ
100.0 °C	100.0 °C	100.4 °C	+0.4 °C	100.4 °C	1.0 °C	Input#17TypeJ
100.0 °C	100.0 °C	100.3 °C	+0.3 °C	100.3 °C	1.0 °C	Input#18TypeJ
100.0 °C	100.0 °C	100.4 °C	+0.4 °C	100.4 °C	1.0 °C	Input#19TypeJ
100.0 °C	100.0 °C	100.3 °C	+0.3 °C	100.3 °C	1.0 °C	Input#20TypeJ
12.000 mA	12.000 mA	12.000 mA	0.000 mA	12.000 mA	1.00 mA	Input#21
12.000 mA	12.000 mA	12.000 mA	0.000 mA	12.000 mA	1.00 mA	Input#22

Conditions Environnementales: Température: 20 °C Humidité: 23 %RH

5F09101

Le droit d'auteur du présent certificat appartient à Inst. St-Laurent Inc et doit être reproduit intégralement, à moins d'une autorisation écrite de Inst. St-Laurent Inc.

Instrumentation Saint•Laurent inc.
Accrédité ISO 17025

CLAS NRC·CNRC
CLAS 2010-02

SCC Accredited LAB
LAB Accrédité CCN
N°669

80 rue de la montagne
St-Joseph du lac
(Québec), J0N 1M0
Tél: (450) 473-6169
Fax: (450) 473-5207
Email: inst.st-laurent@videotron.ca

CERTIFICAT D'ÉTALONNAGE

No.Certificat: CE-EM-015 09/03/20

CLIENT	
Compagnie:	Services Polytests Inc
Adresse:	695 B rue Gaudette
	St-Jean-sur-Richelieu, Québec, J3B 7S7

SPÉCIFICATION DE CALIBRATION	
Procédure de service:	4IN9101
Précision requise:	+\- 2°C
Fréquence d'étalonnage: (jours)	365

SPÉCIFICATION DE L'INSTRUMENT			
Type d'instrument:	Enregistreur	**Type d'entrée:**	Temp
Manufacturier:	Keithley	**Type de sortie:**	Digitale
No. Model:	7700	**Type de mesure:**	Température
No. Série:	1213648	**Gamme:**	Divers
Emplacement:	N/A	**No. Machine:**	N.A.
Type d'Étalonnage:	Test avec EM-147		

Instrumentation St-Laurent Inc. Certifie que l'instrument ci-haut, rencontre ou excède les spécifications établies par le fabriquant. Le système qualité de l'entreprise est conforme aux exigences de la norme ISO 17025 et les étalons utilisés pour effectuer l'étalonnage est retraçable au CNRC et/ou au NIST. Le degré d'incertitude est basé sur un niveau de confiance=95%, K=2.

DATE D'ÉTALONNAGE / ÉMISSION DU CERTIFICAT	
Date d'Étalonnage:	9 Mars 2020
Date du prochain Étalonnage:	9 Mars 2021
Date d'émission du certificat:	9 Mars 2020

CONFORMITÉ D'ÉTALONNAGE	Avant	Après
Conforme:	X	X
Non Conforme:		

Le Service d'évaluation des laboratoires d'étalonnage (CLAS) du Conseil national de recherches du Canada (CNRC) a évalué et certifié la capacité d'étalonnage du laboratoire et la traçabilité au Système international d'unités (SI) ou à des étalons acceptables selon le CLAS. Le présent certificat d'étalonnage est délivré conformément aux conditions de certification du CLAS et aux conditions d'accréditation du Conseil canadien des normes (CCN). Numéro d'accréditation du CCN: # 669. Le CLAS et le CCN ne garantissent pas l'exactitude des étalonnages individuels effectués par les laboratoires accrédités.

Martin Langlais - Technicien

2020- MARS 30

5F09101

Le droit d'auteur du présent certificat appartient à Inst. St-Laurent Inc et doit être reproduit intégralement, à moins d'une autorisation écrite de Inst. St-Laurent Inc.

POLYCONTROLS
INTEGRATION • CALIBRATION • INSTRUMENTATION

CLAS
NRC·CNRC
CLAS 2009-02

SCC Accredited LAB
LAB Accredité CCN
#655

CERTIFICAT D'ÉTALONNAGE # 13427

Date d'étalonnage : 2020-12-21
Date d'émission du certificat : 2020-12-22

Services Polytests
695 B Gaudette street
St-Jean-sur-Richelieu, Québec, Canada
J3B 7S7

Étalonnage d'un
Débitmètre volumétrique American Meter Company DTM-200A S/N : 99A274209

CONFORMITÉ AU PROGRAMME DE QUALITÉ

Tous les étalonnages sont effectués conformément au manuel d'assurance qualité de Polycontrols qui est conforme à la norme ISO/IEC 17025: 2017, à la norme ISO 9001 – 2015 ainsi qu'à toutes autres exigences de qualité définies dans la description d'achat des clients. Les résultats ne sont valides que pour l'objet soumis à l'essai ou à l'étalonnage. Si applicable, la règle de décision est décrite au certificat.

TRAÇABILITÉ

La traçabilité des étalons de débit au National Institute of Standards and Technology, NIST, est maintenue par les laboratoires de Fluke Corporation de Phoenix, Arizona et est conforme aux normes ISO/IEC 17025, ANSI/NCSL Z540-1-1994, ISO-10012-1, MIL-STD 45662A.

Le Service d'évaluation des laboratoires d'étalonnage (CLAS) du Conseil national de recherches du Canada (CNRC) a évalué et certifié la capacité d'étalonnage du laboratoire et la traçabilité au Système international d'unités (SI) ou à des étalons acceptables selon le CLAS. Le présent certificat d'étalonnage est délivré conformément aux conditions de certification du CLAS et aux conditions d'accréditation du Conseil canadien des normes (CCN). Le CLAS et le CCN ne garantissent pas l'exactitude des étalonnages individuels effectués par les laboratoires accrédités.

APTITUDE EN MATIÈRE DE MESURE ET D'ÉTALONNAGE - CMC

Les rendements métrologiques d'étalonnage ont une incertitude de ±0.2% de la lecture pour les mesures entre 5 SCCM à 10 SLPM, ±0.3% de la lecture pour les mesures entre 10 SLPM à 30 SLPM, ±0.2% de la lecture pour les mesures entre 30 SLPM à 3000 SLPM, ±0.3% de la lecture pour les mesures supérieures à 3000 SLPM jusqu'à 6000 SLPM et ±0.5% pour les mesures inférieures à 5 SCCM jusqu'à concurrence de 1 SCCM, équivalent air ou azote. Les incertitudes exprimées sont élargies avec un facteur d'élargissement k = 2, et ce, pour un niveau de confiance d'environ 95 %, dans l'hypothèse d'une distribution normale incluant la résolution de l'instrument. Le rapport d'incertitude des essais (RIE) de cet étalonnage respecte un ratio de 4:1 à moins d'indication contraire.

SOMMAIRE DES CONDITIONS DE L'INSTRUMENT EN TEST

Conditions initiales	En bon état
Travail Effectué	Étalonnage de l'instrument
	Lectures Initiales = Lectures finales, aucun ajustement
Résultats	Lectures finales dans les tolérances
Remarques	Fréquence d'étalonnage aux 12 mois

Bernard Poirier
Métrologiste

Responsable du laboratoire

©2012 Polycontrols • Le présent document ne peut être reproduit, sinon en entier, que par l'approbation écrite des laboratoires d'étalonnage de la compagnie Polycontrols inc. 3650 boul. Matte (Local A-1), Brossard (Québec), Canada, J4Y 2Z2
Tel: (450) 444-3600 Fax: (450) 444-1088 www.polycontrols.com

2021-01-12

POLYCONTROLS
INTEGRATION • CALIBRATION • INSTRUMENTATION

CLAS NRC·CNRC CLAS 2009-02

SCC Accredited LAB Accrédité CCN #655

Certificat d'étalonnage # 13427

Numéro de série:	99A274209	Station de mesure:	3
Date d'étalonnage:	2020-12-21	Procédure:	POS-CAL-005
Identification de l'instrument:	EM-130	Règle de décision:	Méthode #3

Instrument de mesure de référence utilisé pour l'étalonnage final

Description	Modèle	# Série	Traçabilité	Date dû
Fluke molbloc_120 slpm	2E2-S	237	1500279836	2021-03-06
Fluke molbloc_30 slpm	3E4-VCR-V-Q	2403	1500285594	2021-06-10
Fluke molbox1	Molbox1	755	1500285062	2021-06-09
RTD Mist	M22	2208102	2020003043	2021-04-23
Module 44.5 PSI avec Baro 163671	Module 30	160659	2020003156	2021-04-28

Spécifications finales de l'appareil		Condition d'étalonnage	
Gaz	Air	Gaz	Air
Température d'opération		Température ambiante	21.5 °C
Pression à l'entrée		Pression ambiante	1005.15 mbar
Pression à la sortie		Orientation	Verticale
Température de référence		Élastomère	Viton
Pression de référence		Valve	Viton
Étendue d'échelle	0-200 ACFH		
Signaux Entrée/Sortie	-		
Alimentation			
Tolérance ±1 %O.R.			

Lectures finales

Débit du test ACFH	Instrument en test ft³	Valeurs mesurées Pression PSIA	Température °C	Référence ft³	Référence calculée ft³	Erreur calculée ft³	Tolérance acceptable ft³	Incertitude k = 2 ft³	TUR
40.6438	6.760	14.5928	21.49	6.710	6.766	-0.006	0.068	0.023	2.92
70.7640	11.790	14.6081	21.33	11.683	11.762	0.028	0.118	0.029	>4
164.5625	27.430	14.7148	21.28	27.473	27.453	-0.023	0.275	0.068	>4

Fc. : 1.0008876

2021. 01. 12

POLYCONTROLS
INTEGRATION • CALIBRATION • INSTRUMENTATION

CLAS NRC·CNRC CLAS 2009-02

SCC Accredited LAB Accredité CCN #655

Certificat d'étalonnage # 13427

Numéro de série:	99A274209	Station de mesure:	3
Date d'étalonnage:	2020-12-21	Procédure:	POS-CAL-005
Identification de l'instrument:	EM-130	Règle de décision:	Méthode #3

Résultats finaux

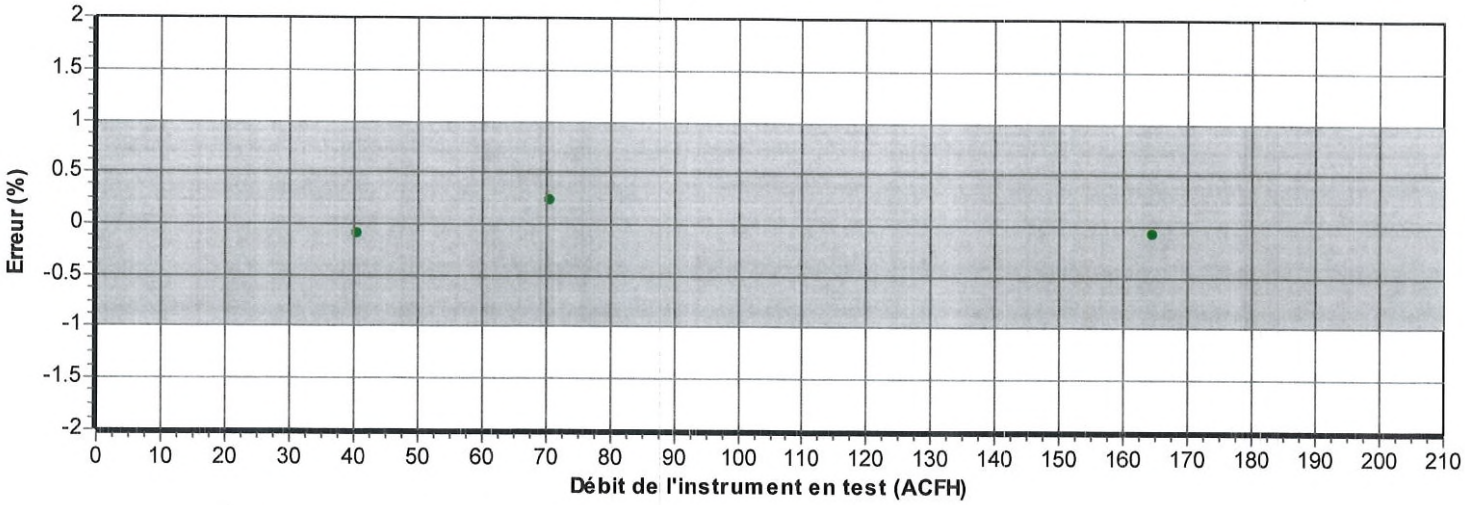

Voir l'annexe pour la règle de décision

2021-01-21

Annexe pour la règle de décision

Méthode 3 Statut de Conformité Non-binaire avec Bande de Garde en considérant l'incertitude de la mesure directement

Cette méthode tient compte d'une bande de garde pour définir l'intervalle acceptable et de rejet. La limite acceptable du résultat de la mesure est calculée selon la méthode mathématique suivante AL = TL – w et de rejet RL = TL + w, dont w = rU. Le multiple r de l'incertitude combiné élargie U peut être défini selon la table 1 section 5.2 du document ILAC G8 : 2019. L'incertitude de la mesure U est une incertitude combinée élargie ayant un niveau de confiance de 95% (k = 2). La règle de conformité non-binaire avec bande de garde est définie lorsqu'il y a quatre choix sur le statut de l'essai : dans la tolérance, acceptation conditionnelle, rejet conditionnel, et hors tolérance.

Les conformités de l'essai sont définies telles que :

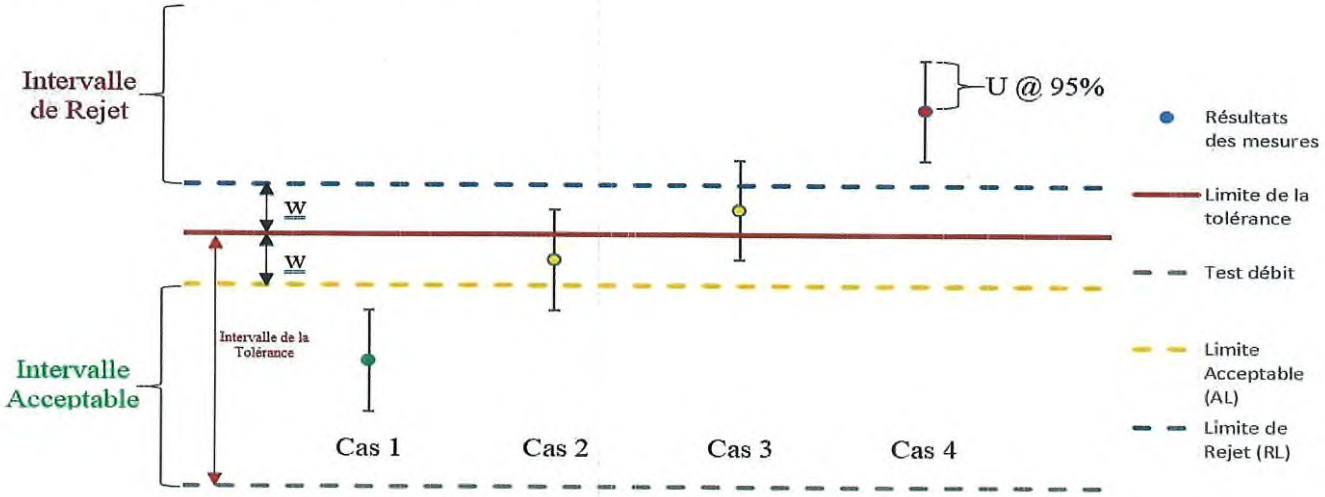

Explication de la règle Non-Binaire avec Bande de Garde

Cas 1 – *Inférieur à la limite acceptable AL*, ***Statut : Dans les tolérances (In tolerance).***

- Le résultat de la mesure est à l'intérieur de l'intervalle acceptable. Cependant, l'estimation du risque en assumant la probabilité d'une distribution normale d'être à l'extérieur de la limite de la tolérance est < 2.5%. L'incertitude de l'essai est directement prise en considération. Couleur verte.

Cas 2 – *Inférieur à la limite de la tolérance TL, supérieur à la limite acceptable AL*, ***Statut : Dans les tolérances-Conditionnel.***

- Le résultat de la mesure est à l'extérieur de l'intervalle acceptable mais inférieur à la limite de la tolérance. Cependant, la valeur observée est située dans la bande de garde w = TL-AL et le statut du résultat est conditionnel à l'évaluation du risque du client. L'incertitude de la mesure est directement prise en considération. Couleur jaune.

Cas 3 – *Supérieur à la limite de la tolérance, inférieur à RL*, ***Statut : Hors tolérance-Conditionnel.***

- Le résultat de la mesure est supérieur à la limite de la tolérance mais à l'extérieur de l'intervalle de rejet. Cependant, la valeur observée est située dans la bande de garde w = TL-RL et le statut du résultat est conditionnel à l'évaluation du risque du client. L'incertitude de la mesure est directement prise en considération. Couleur jaune.

Cas 4 – *Supérieur à la limite de rejet RL*, ***Statut : Hors-tolérance (Out of tolerance).***

- Le résultat de la mesure est à l'intérieur de l'intervalle de rejet. L'incertitude de l'essai est directement prise en considération. Couleur rouge.

©2020 Polycontrols — Le présent document ne peut être reproduit, sinon en entier, que par l'approbation écrite des laboratoires d'étalonnages de la compagnie Polycontrols inc. 3650 boul. Matte (Local A-1), Brossard (Québec), Canada, J4Y 2Z2
Tel : (450) 444-3600 Fax : (450) 444-1088 www.polycontrols.com

Instrumentation Saint•Laurent inc.
Accrédité ISO 17025

CLAS NRC·CNRC
CLAS 2010-02

SCC Accredited LAB
LAB Accrédité CCN
N°669

80 rue de la montagne
St-Joseph du lac
(Québec), J0N 1M0
Tél: (450) 473-6169
Fax: (450) 473-5207
Email: inst.st-laurent@videotron.ca

CERTIFICAT D'ÉTALONNAGE

No.Certificat: CE-EM-136 12/03/20

CLIENT	
Compagnie:	Services Polytests Inc
Adresse:	695 B rue Gaudette
	St-Jean-sur-Richelieu, Québec, J3B 7S7

SPÉCIFICATION DE CALIBRATION	
Procédure de service:	ISL-004
Précision requise:	+\-2°C +\-3%RH
Fréquence d'étalonnage: (jours)	365

SPÉCIFICATION DE L'INSTRUMENT			
Type d'instrument:	Hygromètre	**Type d'entrée:**	Temp/%RH
Manufacturier:	Fluke	**Type de sortie:**	Digitale
No. Model:	971	**Type de mesure:**	Temp/humidité
No. Série:	10610850	**Gamme:**	5-95%RH -20a60°C
Emplacement:	N.A.	**No. Machine:**	N.A.

SPÉCIFICATION DE L'ÉTALON			
Étalon Utilisé:	Vaisala HM141-HMP46	**No. du certificat d'étalonnage:**	2019006062
No. Série:	V0820123-U4840010	**Dernière date d'étalonnage:**	12-Sep-19
Certificat fait par:	Alpha Controls	**Prochaine date d'étalonnage:**	12-Sep-20
Commentaire:			

RÉSULTAT D'ÉTALONNAGE

Entrée Source	Valeur Donnée	Valeur Actuelle	Erreur de Déviation	Valeur après Étalonnage	Incertitude Élargie	Commentaire
25.0 °C	25.0 °C	25.0 °C	0.0 °C	25.0 °C	1.0 °C	
40.0 °C	40.0 °C	40.2 °C	+0.2 °C	40.2 °C	1.0 °C	
30.0 %RH	30.0 %RH	31.4 %RH	+1.4 %RH	31.4 %RH	-- %RH	
55.0 %RH	55.0 %RH	55.6 %RH	+0.6 %RH	55.6 %RH	-- %RH	
75.0 %RH	75.0 %RH	75.4 %RH	+0.4 %RH	75.4 %RH	-- %RH	

Conditions Environnementales: Température: N.A. Humidité: N.A.

Type d'Étalonnage:

Instrumentation St-Laurent Inc. Certifie que l'instrument ci-haut, rencontre ou excède les spécifications établies par le fabriquant. Le système qualité de l'entreprise est conforme aux exigences de la norme ISO 17025 et les étalons utilisés pour effectuer l'étalonnage est retraçable au CNRC et/ou au NIST. Le degré d'incertitude est basé sur un niveau de confiance=95%, K=2.

DATE D'ÉTALONNAGE / ÉMISSION DU CERTIFICAT	
Date d'Étalonnage:	12 Mars 2020
Date du prochain Étalonnage:	12 Mars 2021
Date d'émission du certificat:	12 Mars 2020

CONFORMITÉ D'ÉTALONNAGE	Avant	Après
Conforme:	X	X
Non Conforme:		

Le Service d'évaluation des laboratoires d'étalonnage (CLAS) du Conseil national de recherches du Canada (CNRC) a évalué et certifié la capacité d'étalonnage du laboratoire et la traçabilité au Système international d'unités (SI) ou à des étalons acceptables selon le CLAS. Le présent certificat d'étalonnage est délivré conformément aux conditions de certification du CLAS et aux conditions d'accréditation du Conseil canadien des normes (CCN). Numéro d'accréditation du CCN: # 669. Le CLAS et le CCN ne garantissent pas l'exactitude des étalonnages individuels effectués par les laboratoires accrédités.

Martin Langlais - Technicien

2020 - MARS 30

Le droit d'auteur du présent certificat appartient à Inst. St-Laurent Inc et doit être reproduit intégralement, à moins d'une autorisation écrite de Inst. St-Laurent Inc.

CERTIFICATE OF NIST TRACEABLE CALIBRATION

Calibration Certificate No: 84629

Customer Information

Customer: Services Polytests, Inc.

Address : 695-B Gaudette
St-Jean-sur-richelieu
J3B 7S7

Customer PO #: 100519

Calibration Procedure Information

Procedure ID: GTP AIRVEL Revision #: 7 Revision Date: 10/17/2018

Calibration Standards Information

Graftel ID	Manufacturer	Model #	Description	CAL Due
10017	Hart Scientific/Burns	1502A/3925	PRT, Temperature	8/3/2021
10086	Furness Controls	FC0332	DP Transmitter	5/7/2021
10100	Graftel	n/a	Temperature	10/18/2022
10171	Furness	FC0332-2W	0 - .4" H2O	5/7/2021
10187	Vaisala	PTB210	Barometric Pressure Gauge	12/1/2021
10157	HOBO	UX100-011	RH/Temp logger	10/15/2020

Sensor Information

Manufacturer: Omega Description: Velometer Method Used: Pitot Tube

Model #: HHF143 Rated Accuracy: ± See Attachment Accuracy Specified By: Omega

Instrument ID#: EM153 Range: 40 to 5000 fpm Condition: Functional

Serial #: 1015949

Comments: Calibration Date: 08/27/2020 | Upper range limited to 5000fpm, 08-16-18.
Calibration Due: 08/27/2021

The calibrations within the certificate/report are traceable through NIST or another National Metrology Institute to the International System of Units (SI). The reported calibration uncertainty has a confidence level of 95% (k=2). A calibration uncertainty ratio of 4:1 was maintained unless required uncertainty is supported by analysis. Graftel Quality Assurance System complies with applicable requirements of ISO/IEC-17025-2017, ANSI/NCSL Z540-I-1994 and ISO 9001: 2008. All results contained within this certificate relate only to item(s) calibrated. This certificate shall not be reproduced except in full and with the written consent of Graftel. Acceptance Criteria per Simple Acceptance Rule: Measurement Uncertainty is not applied to the measured value when in/out of tolerance statement is made.

Performed By: Date: 8/27/2020

Kevin Garcia
Calibration Technician

Approved By: Date: 8/28/2020

Scott Pickett
Vice President, Lab Services

GRAFTEL 95 Chancellor Dr., Roselle, IL 60172 847.364.2600
www.graftel.com

ATTACHMENT TO CALIBRATION CERTIFICATE 84629
AS FOUND / AS LEFT DATA

Reading From Standard,	Lower Limit of Meter Reading,	Measured Reading From Meter,	Upper Limit of Meter Reading,	Error,	Measurement Uncertainty (k=2)	CMC (k=2)	STATUS
			Actual Air Velocity				
fpm	fpm	fpm	fpm	fpm	fpm	fpm	STATUS
170	167	172	173	2	4	4	Pass
283	279	281	287	-2	6	6	Pass
466	460	464	472	-2	8	8	Pass
1483	1467	1485	1499	2	21	21	Pass
2568	2541	2569	2595	1	35	35	Pass
3500	3464	3500	3536	0	47	47	Pass
4531	4485	4537	4577	6	61	61	Pass
5007	4956	5011	5058	4	67	67	Pass

ERROR CHART

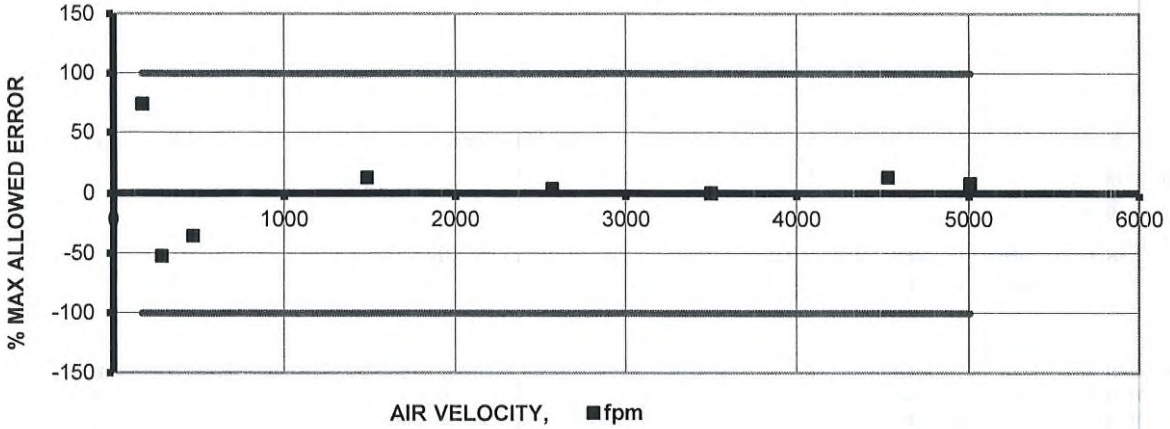

Instrument Specifications		
Test Fluid:	Air	
Lower Velocity Range:	40	fpm
Upper Velocity Range:	7800	fpm
Velocity Resolution:	1	
Velocity Accuracy:	+/-(1% Reading + 1 dgt)	

Laboratory Ambient Conditions		
Pressure:	14.26	psia
Humidity:	53.00	%RH
Temperature:	84.64	ºF

GRAFTEL
FLOW - TEMPERATURE - HUMIDITY - PRESSURE - DESIGN - CONSULTING - ENGINEERING
NIST Traceable Calibration Data Sheet
WWW.GRAFTEL.COM
870 Cambridge Drive, Elk Grove Village, IL 60007 Phone: 847-364-2600 Fax: 847-364-2899

2020-08-31

Instrumentation Saint•Laurent inc.
Accrédité ISO 17025

CLAS NRC·CNRC
CLAS 2010-02

SCC Accredited LAB
LAB Accrédité CCN
N°669

80 rue de la montagne
St-Joseph du lac
(Québec), J0N 1M0
Tél: (450) 473-6169
Fax: (450) 473-5207
Email: inst.st-laurent@videotron.ca

CERTIFICAT D'ÉTALONNAGE

No.Certificat: CE-EM-154 09/03/20

CLIENT	
Compagnie:	Services Polytests Inc
Adresse:	695 B rue Gaudette
	St-Jean-sur-Richelieu, Québec, J3B 7S7

SPÉCIFICATION DE CALIBRATION	
Procédure de service:	4IN9101
Précision requise:	+\- 2°C
Fréquence d'étalonnage: (jours)	365

SPÉCIFICATION DE L'INSTRUMENT			
Type d'instrument:	Enregistreur	**Type d'entrée:**	Temp
Manufacturier:	Keithley	**Type de sortie:**	Digitale
No. Model:	7700	**Type de mesure:**	Température
No. Série:	1306774	**Gamme:**	Divers
Emplacement:	N/A	**No. Machine:**	N.A.

SPÉCIFICATION DE L'ÉTALON			
Étalon Utilisé:	Fluke 744	**No. du certificat d'étalonnage:**	2019007064
No. Série:	8139009	**Dernière date d'étalonnage:**	18-Oct-19
Certificat fait par:	Alpha Controls	**Prochaine date d'étalonnage:**	18-Oct-20
Commentaire:			

RÉSULTAT D'ÉTALONNAGE

Entrée Source	Valeur Donnée	Valeur Actuelle	Erreur de Déviation	Valeur après Étalonnage	Incertitude Élargie	Commentaire
-17.000 mV	-17.000 mV	-17.016 mV	-0.016 mV	-17.016 mV	0.1 mV	Input#1
0.000 mV	0.000 mV	0.037 mV	+0.037 mV	0.037 mV	0.1 mV	Input#1
20.000 mV	20.000 mV	19.940 mV	-0.060 mV	19.940 mV	0.1 mV	Input#1
30.000 mV	30.000 mV	29.931 mV	-0.069 mV	29.931 mV	0.1 mV	Input#2
Input#3 Non-Conforme						
5.000 V.DC.	5.000 V.DC.	4.999 V.DC.	-0.001 V.DC.	4.999 V.DC.	0.1 V.DC.	Input#4
30.000 mV	30.000 mV	29.990 mV	-0.010 mV	29.990 mV	0.1 mV	Input#5
30.000 mV	30.000 mV	29.991 mV	+0.009 mV	29.991 mV	0.1 mV	Input#6
100.00 Ohms	100.00 Ohms	99.98 Ohms	-0.02 Ohms	99.98 Ohms	1.0 Ohms	Input#7
100.00 Ohms	100.00 Ohms	99.99 Ohms	-0.01 Ohms	99.99 Ohms	1.0 Ohms	Input#8
100.00 Ohms	100.00 Ohms	99.99 Ohms	-0.01 Ohms	99.99 Ohms	1.0 Ohms	Input#9
100.00 Ohms	100.00 Ohms	99.99 Ohms	-0.01 Ohms	99.99 Ohms	1.0 Ohms	Input#10
100.0 °C	100.0 °C	100.5 °C	+0.5 °C	100.5 °C	1.0 °C	Input#11TypeT
100.0 °C	100.0 °C	100.4 °C	+0.4 °C	100.4 °C	1.0 °C	Input#12TypeT
100.0 °C	100.0 °C	100.0 °C	0.0 °C	100.0 °C	1.0 °C	Input#13 TypeJ
100.0 °C	100.0 °C	100.2 °C	+0.2 °C	100.2 °C	1.0 °C	Input#14TypeJ
100.0 °C	100.0 °C	100.4 °C	+0.4 °C	100.4 °C	1.0 °C	Input#15 TypeJ
100.0 °C	100.0 °C	100.0 °C	0.0 °C	100.0 °C	1.0 °C	Input#16TypeJ
100.00 Ohms	100.00 Ohms	99.99 Ohms	-0.01 Ohms	99.99 Ohms	1.0 Ohms	Input#17
100.00 Ohms	100.00 Ohms	100.01 Ohms	+0.01 Ohms	100.01 Ohms	1.0 Ohms	Input#18
100.00 Ohms	100.00 Ohms	100.02 Ohms	+0.02 Ohms	100.02 Ohms	1.0 Ohms	Input#19
100.00 Ohms	100.00 Ohms	100.01 Ohms	+0.01 Ohms	100.01 Ohms	1.0 Ohms	Input#20
12.000 mA	12.000 mA	12.000 mA	0.000 mA	12.000 mA	1.00 mA	Input#21
12.000 mA	12.000 mA	12.000 mA	0.000 mA	12.000 mA	1.00 mA	Input#22

Conditions Environnementales: Température: 20 °C Humidité: 23 %RH

5F09101

Le droit d'auteur du présent certificat appartient à Inst. St-Laurent Inc et doit être reproduit intégralement, à moins d'une autorisation écrite de Inst. St-Laurent Inc.

Instrumentation Saint•Laurent inc.
Accrédité ISO 17025

CLAS NRC·CNRC
CLAS 2010-02

SCC Accredited LAB
LAB Accrédité CCN
N°669

80 rue de la montagne
St-Joseph du lac
(Québec), J0N 1M0
Tél: (450) 473-6169
Fax: (450) 473-5207
Email: inst.st-laurent@videotron.ca

CERTIFICAT D'ÉTALONNAGE

No.Certificat: CE-EM-154 09/03/20

CLIENT	
Compagnie:	Services Polytests Inc
Adresse:	695 B rue Gaudette
	St-Jean-sur-Richelieu, Québec, J3B 7S7

SPÉCIFICATION DE CALIBRATION	
Procédure de service:	4IN9101
Précision requise:	+\- 2°C
Fréquence d'étalonnage: (jours)	365

SPÉCIFICATION DE L'INSTRUMENT			
Type d'instrument:	Enregistreur	**Type d'entrée:**	Temp
Manufacturier:	Keithley	**Type de sortie:**	Digitale
No. Model:	7700	**Type de mesure:**	Température
No. Série:	1306774	**Gamme:**	Divers
Emplacement:	N/A	**No. Machine:**	N.A.
Type d'Étalonnage:	Test avec EM-147		

Instrumentation St-Laurent Inc. Certifie que l'instrument ci-haut, rencontre ou excède les spécifications établies par le fabriquant. Le système qualité de l'entreprise est conforme aux exigences de la norme ISO 17025 et les étalons utilisés pour effectuer l'étalonnage est retraçable au CNRC et/ou au NIST. Le degré d'incertitude est basé sur un niveau de confiance=95%, K=2.

DATE D'ÉTALONNAGE / ÉMISSION DU CERTIFICAT	
Date d'Étalonnage:	9 Mars 2020
Date du prochain Étalonnage:	9 Mars 2021
Date d'émission du certificat:	9 Mars 2020

CONFORMITÉ D'ÉTALONNAGE		
	Avant	**Après**
Conforme:	X	X
Non Conforme:		

Le Service d'évaluation des laboratoires d'étalonnage (CLAS) du Conseil national de recherches du Canada (CNRC) a évalué et certifié la capacité d'étalonnage du laboratoire et la traçabilité au Système international d'unités (SI) ou à des étalons acceptables selon le CLAS. Le présent certificat d'étalonnage est délivré conformément aux conditions de certification du CLAS et aux conditions d'accréditation du Conseil canadien des normes (CCN). Numéro d'accréditation du CCN: # 669. Le CLAS et le CCN ne garantissent pas l'exactitude des étalonnages individuels effectués par les laboratoires accrédités.

M L L

Martin Langlais - Technicien

2020 - MARS 30

5F09101

Le droit d'auteur du présent certificat appartient à Inst. St-Laurent Inc et doit être reproduit intégralement, à moins d'une autorisation écrite de Inst. St-Laurent Inc.

| CALIBRATION SOLUTIONS TO IMPROVE YOUR PERFORMANCE |
| LA METROLOGIE AU SERVICE DE VOTRE PERFORMANCE |
/ LA METROLOGIE AU SERVICE DE VOTRE PERFORMANCE /
/ CALIBRATION SOLUTIONS TO IMPROVE YOUR PERFORMANCE /

4407 rue Charleroi, Montréal-Nord (Québec)
H1H 1T6 Canada
TEL.: (514) 329-3242 / 1 888 774-6665
FAX : (514) 329-3750
info.canada@trescal.com

Certificat d'Étalonnage / Certificate of Calibration

CLIENT :
SERVICES POLYTESTS INC.
695-B GAUDETTE
ST-JEAN-SUR-RICHELIEU, QUEBEC

Description:	STOPWATCH
Fabricant/ Manufacturer:	EXTECH
Modèle/ Model :	365510
No série / Serial no :	131636
# Inventaire / Asset # :	EM-175

CERTIFICAT No / Certificate No: 312464

PROCÉDURE / Procedure :
TRESCAL - EXTECH_365510

Date étalonnage/ Calibration Performed : aaaa - mm - jj 2020-12-24

Echéance/ Due Date : 2021-12-24

Type de résultat / *Results type* :	As-Found = As-Left
Résultats d'essais / *Test results* :	Conforme / In Tolerance

Conditions de mesure / Measurement conditions

TEMPÉRATURE / Temp. : 23°C

HUMIDITÉ / Humidity : 36% RH

Usage restreint/ *Restricted use* : ☐

Réparation effectuée / *Repair performed* : ☐

Ajustement effectué / *Adjustment performed* : ☐

ÉTALONS UTILISÉS/ Standards Used:

Identification	Manuf.	Model	Description	Ser. #	Étalonné/ Cal.	Échéance/ Due
PR0313	H-P	53132A	UNIVERSAL COUNTER	3546A03142	2020-07-22	2021-07-22
PR0392	AGILENT	33250A	FUNCTION/ARBITRARY WAVEFORM GENERATOR	MY40008014	2019-06-12	2021-06-12

Les spécifications mentionnées comme limites de tolérances d'essai sont celles établies par le manufacturier, sauf indication contraire.
Test tolerance limits are based on manufacturers specifications unless stated otherwise.

NOTES :

2021.01.19

Technicien :
Technician

D. MARTEL

Le système qualité de la société est conforme aux exigences de la norme **ISO 17025** et les étalons utilisés pour le processus d'étalonnage sont retraçables au SI par l'entremise du CNRC et/ou du NIST.
*Our quality system complies with the requirements of **ISO 17025** and the standards used for the calibration are traceable to SI through NRC and/or NIST.*

LE DROIT D'AUTEUR DE CE CERTIFICAT APPARTIENT À TRESCAL CANADA INC.CE CERTIFICAT NE PEUT ÊTRE REPRODUIT AUTREMENT QU'EN ENTIER ET AVEC LE CONSENTEMENT PRÉALABLE ÉCRIT DE TRESCAL CANADA INC.
TRESCAL CANADA INC. OWN COPYRIGHT OF THIS CERTIFICATE. THE CERTIFICATE MAY NOT BE REPRODUCED OTHER THAN IN FULL EXCEPT WITH THE PRIOR WRITTEN CONSENT OF TRESCAL CANADA INC.

COMPLIANT 17025 ISO/IEC

Trescal
| CALIBRATION SOLUTIONS TO IMPROVE YOUR PERFORMANCE |
| LA MÉTROLOGIE AU SERVICE DE VOTRE PERFORMANCE |

Certificat d'Étalonnage
Certificate of Calibration

	312464
CLIENT / Customer :	SERVICES POLYTESTS INC.
DESCRIPTION / Description :	STOPWATCH
MANUFACTURIER / Manufacturer :	EXTECH
MODÈLE / Model :	365510

DESCRIPTION Description	LIMITES Limits	LECTURES Readings	LIMITES Limits
	Min		Max
Temps écoulé, chronomètre sous test / Elapsed time on test stopwatch		**Comptes / Counts** Chronomètre/timer 138687	

Minutes	Seconds	1/100 sec
23	6	87

Total au compteur / Reference timer: 138685,5 comptes/counts

(Δt) Deviation (1/100sec): 1,50

Deviation Par jour/ Per day (%):	0,0011 %	* Secondes	Deviation 24hrs	* Secondes
Deviation Par jour/ Per day (sec):	**0,93 sec**	-3,00	**0,93**	3,00

* Tolérances basées sur une déviation maximale de 3 sec/jour
* Tolerances based on a 3 sec/day maximum deviation

Incertitude/ Uncertainty: ±37 ms

Lorsque fournies dans le rapport, les incertitudes de mesure sont des incertitudes élargies représentant un niveau de confiance d'approximativement 95% , obtenu en multipliant l'incertitude-type composée par un facteur de couverture de k=2.

When supplied in the report, the measurement uncertainties are expanded uncertainties representing a confidence level of approximately 95% , obtain by multiplying the combined standard uncertainty by a coverage factor of k=2.

COMPLIANT 17025
trescal.com

POLYCONTROLS
INTEGRATION • CALIBRATION • INSTRUMENTATION

CLAS NRC-CNRC CLAS 2009-02

SCC Accredited LAB Accrédité CCN #655

CERTIFICAT D'ÉTALONNAGE # 13439

Date d'étalonnage : 2020-12-22
Date d'émission du certificat : 2020-12-23

Services Polytests
695 B Gaudette street
St-Jean-sur-Richelieu, Québec, Canada
J3B 7S7

Étalonnage d'un
Shinigawa DCDa-2c S/N : 23544

CONFORMITÉ AU PROGRAMME DE QUALITÉ

Tous les étalonnages sont effectués conformément au manuel d'assurance qualité de Polycontrols qui est conforme à la norme ISO/IEC 17025: 2017, à la norme ISO 9001 – 2015 ainsi qu'à toutes autres exigences de qualité définies dans la description d'achat des clients. Les résultats ne sont valides que pour l'objet soumis à l'essai ou à l'étalonnage. Si applicable, la règle de décision est décrite au certificat.

TRAÇABILITÉ

La traçabilité des étalons de débit au National Institute of Standards and Technology, NIST, est maintenue par les laboratoires de Fluke Corporation de Phoenix, Arizona et est conforme aux normes ISO/IEC 17025, ANSI/NCSL Z540-1-1994, ISO-10012-1, MIL-STD 45662A.

Le Service d'évaluation des laboratoires d'étalonnage (CLAS) du Conseil national de recherches du Canada (CNRC) a évalué et certifié la capacité d'étalonnage du laboratoire et la traçabilité au Système international d'unités (SI) ou à des étalons acceptables selon le CLAS. Le présent certificat d'étalonnage est délivré conformément aux conditions de certification du CLAS et aux conditions d'accréditation du Conseil canadien des normes (CCN). Le CLAS et le CCN ne garantissent pas l'exactitude des étalonnages individuels effectués par les laboratoires accrédités.

APTITUDE EN MATIÈRE DE MESURE ET D'ÉTALONNAGE - CMC

Les rendements métrologiques d'étalonnage ont une incertitude de ±0.2% de la lecture pour les mesures entre 5 SCCM à 10 SLPM, ±0.3% de la lecture pour les mesures entre 10 SLPM à 30 SLPM, ±0.2% de la lecture pour les mesures entre 30 SLPM à 3000 SLPM, ±0.3% de la lecture pour les mesures supérieures à 3000 SLPM jusqu'à 6000 SLPM et ±0.5% pour les mesures inférieures à 5 SCCM jusqu'à concurrence de 1 SCCM, équivalent air ou azote. Les incertitudes exprimées sont élargies avec un facteur d'élargissement k = 2, et ce, pour un niveau de confiance d'environ 95 %, dans l'hypothèse d'une distribution normale incluant la résolution de l'instrument. Le rapport d'incertitude des essais (RIE) de cet étalonnage respecte un ratio de 4:1 à moins d'indication contraire.

SOMMAIRE DES CONDITIONS DE L'INSTRUMENT EN TEST

Conditions initiales	En bon état
Travail Effectué	Étalonnage de l'instrument
Résultats	Lectures initiales dans/hors tolérances-conditionnel
	Lectures finales dans les tolérances avec un K facteur de 0.98
Remarques	Fréquence d'étalonnage aux 12 mois

B Poirier
Bernard Poirier
Métrologiste

Responsable du laboratoire

©2012 Polycontrols • Le présent document ne peut être reproduit, sinon en entier, que par l'approbation écrite des laboratoires d'étalonnage de la compagnie Polycontrols inc. 3650 boul. Matte (Local A-1), Brossard (Québec), Canada, J4Y 2Z2
Tel: (450) 444-3600 Fax: (450) 444-1088 www.polycontrols.com

2021.01.12

POLYCONTROLS
INTEGRATION • CALIBRATION • INSTRUMENTATION

CLAS NRC-CNRC CLAS 2009-02

SCC Accredited LAB Accredité CCN #655

Certificat d'étalonnage # 13439

Numéro de série:	23544	Station de mesure:	3
Date d'étalonnage:	2020-12-22	Procédure:	POS-CAL-005
Identification de l'instrument:	EM-178	Règle de décision:	Méthode #3

Instrument de mesure de référence utilisé pour l'étalonnage initial

Description	Modèle	# Série	Traçabilité	Date dû
Fluke molbloc_30 slpm	3E4-VCR-V-Q	2403	1500285594	2021-06-10
Fluke molbox1	Molbox1	755	1500285062	2021-06-09
RTD Mist	M22	2208102	2020003043	2021-04-23
Module 44.5 PSI avec Baro 163671	Module 30	160659	2020003156	2021-04-28

Spécifications initiales de l'appareil		Condition d'étalonnage	
Gaz	Air	Gaz	Air
Température d'opération		Température ambiante	20.5 °C
Pression à l'entrée		Pression ambiante	1001.8 mbar
Pression à la sortie		Orientation	Horizontale
Température de référence		Élastomère	Viton
Pression de référence		Valve	
Étendue d'échelle	10-2000 ALH		
Signaux Entrée/Sortie	-		
Alimentation			
Tolérance ±2 %O.R.			

Lectures initiales

Débit du test ALH	Instrument en test L	Valeurs mesurées Pression PSIA	Valeurs mesurées Température °C	Valeurs mesurées Référence L	Référence calculée L	Erreur calculée L	Tolérance acceptable L	Incertitude k = 2 L	TUR
409.8377	69.1750	14.5381	20.38	67.7339	68.2997	0.8753	1.3660	0.2264	>4
706.3275	119.7100	14.5430	20.40	116.6794	117.6206	2.0894	2.3524	0.3898	>4
1573.6968	266.9000	14.5563	20.40	259.8304	261.6944	5.2056	5.2339	0.8674	>4

POLYCONTROLS
INTEGRATION • CALIBRATION • INSTRUMENTATION

CLAS 2009-02

#655

Certificat d'étalonnage # 13439

Numéro de série:	23544	Station de mesure:	3
Date d'étalonnage:	2020-12-22	Procédure:	POS-CAL-005
Identification de l'instrument:	EM-178	Règle de décision:	Méthode #3

Résultats initiaux

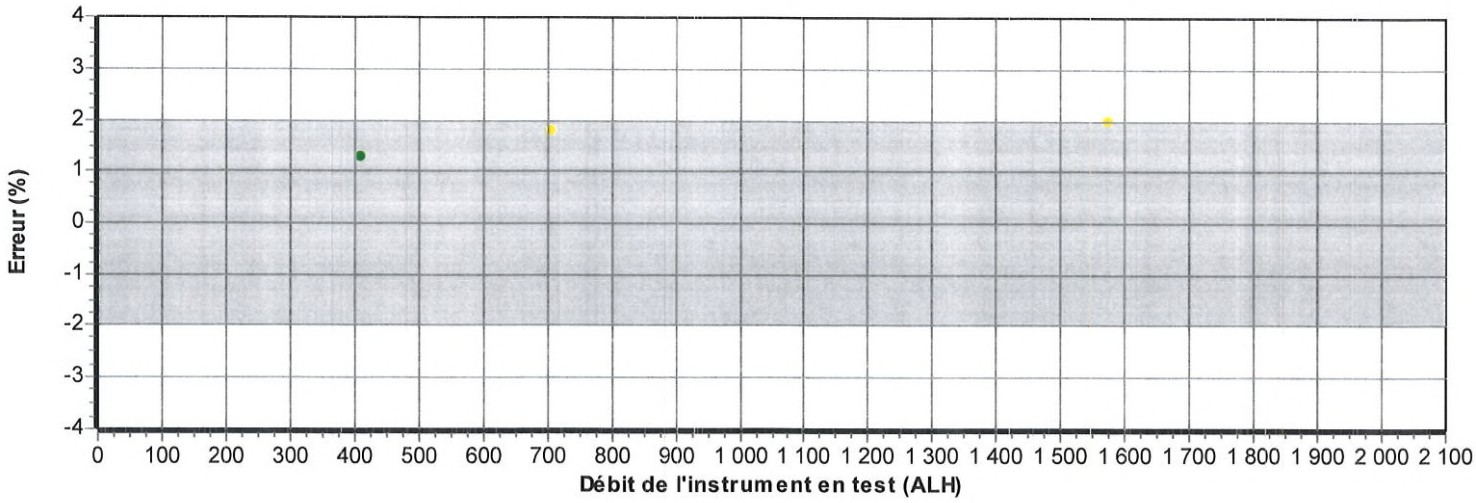

Voir l'annexe pour la règle de décision

POLYCONTROLS
INTEGRATION • CALIBRATION • INSTRUMENTATION

CLAS NRC·CNRC CLAS 2009-02

SCC Accredited LAB Accrédité CCN #655

Certificat d'étalonnage # 13439

Numéro de série:	23544	Station de mesure:	3
Date d'étalonnage:	2020-12-22	Procédure:	POS-CAL-005
Identification de l'instrument:	EM-178	Règle de décision:	Méthode #3

Instrument de mesure de référence utilisé pour l'étalonnage final

Description	Modèle	# Série	Traçabilité	Date dû
Fluke molbloc_30 slpm	3E4-VCR-V-Q	2403	1500285594	2021-06-10
Fluke molbox1	Molbox1	755	1500285062	2021-06-09
RTD Mist	M22	2208102	2020003043	2021-04-23
Module 44.5 PSI avec Baro 163671	Module 30	160659	2020003156	2021-04-28

Spécifications finales de l'appareil

Gaz	Air
Température d'opération	
Pression à l'entrée	
Pression à la sortie	
Température de référence	
Pression de référence	
Étendue d'échelle	10-2000 ALH
Signaux Entrée/Sortie	-
Alimentation	
Tolérance	±2 %O.R.

Condition d'étalonnage

Gaz	Air
Température ambiante	21 °C
Pression ambiante	1002.18 mbar
Orientation	Horizontale
Élastomère	Viton
Valve	

Lectures finales

Débit du test ALH	Instrument en test L	Valeurs mesurées Pression PSIA	Valeurs mesurées Température °C	Valeurs mesurées Référence L	Référence calculée L	Erreur calculée L	Tolérance acceptable L	Incertitude k = 2 L	TUR
403.8407	66.8703	14.5466	21.01	66.5447	67	-0.3356	1.3441	0	>4
696.9086	115.8066	14.5496	20.81	115.0861	116	-0.3173	2.3225	0	>4
1573.7245	261.4440	14.5575	20.48	260.0681	262	-0.5338	5.2396	1	>4

Fc: 1.0019396

2021.01.21

POLYCONTROLS
INTEGRATION • CALIBRATION • INSTRUMENTATION

CLAS NRC-CNRC CLAS 2009-02

SCC Accredited LAB Accrédité CCN #655

Certificat d'étalonnage # 13439

Numéro de série:	23544	Station de mesure:	3
Date d'étalonnage:	2020-12-22	Procédure:	POS-CAL-005
Identification de l'instrument:	EM-178	Règle de décision:	Méthode #3

Résultats finaux

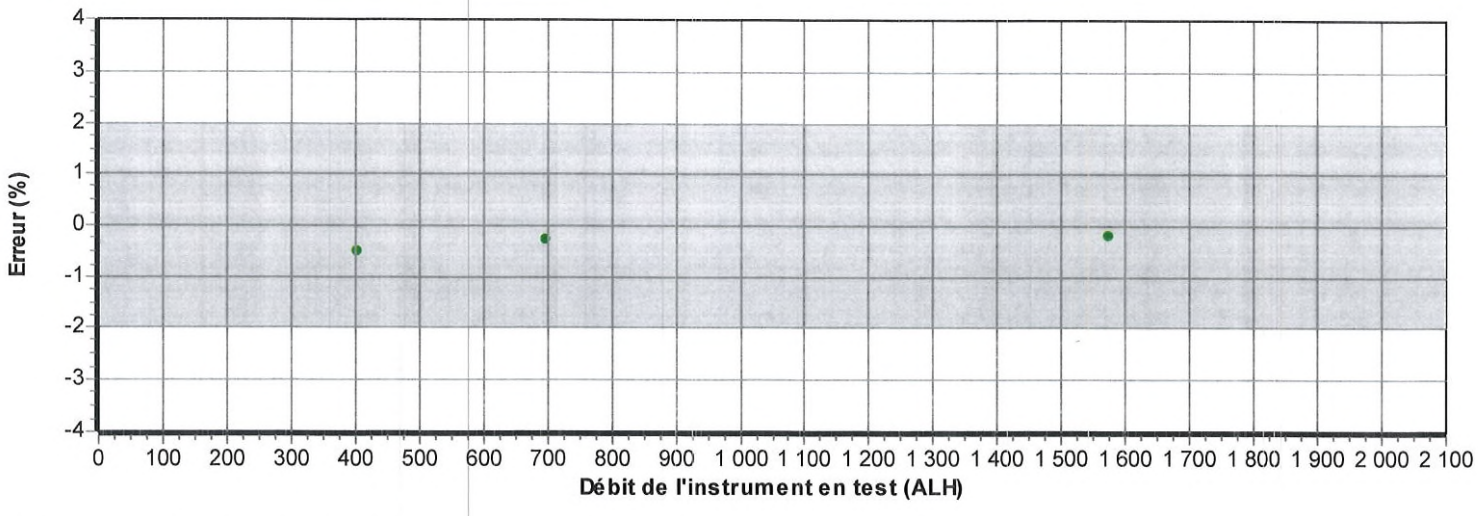

Voir l'annexe pour la règle de décision

2021-01-12

Annexe pour la règle de décision

Méthode 3 Statut de Conformité Non-binaire avec Bande de Garde en considérant l'incertitude de la mesure directement

Cette méthode tient compte d'une bande de garde pour définir l'intervalle acceptable et de rejet. La limite acceptable du résultat de la mesure est calculée selon la méthode mathématique suivante AL = TL – w et de rejet RL = TL + w, dont w = rU. Le multiple r de l'incertitude combiné élargie U peut être défini selon la table 1 section 5.2 du document ILAC G8 : 2019. L'incertitude de la mesure U est une incertitude combinée élargie ayant un niveau de confiance de 95% (k = 2). La règle de conformité non-binaire avec bande de garde est définie lorsqu'il y a quatre choix sur le statut de l'essai : dans la tolérance, acceptation conditionnelle, rejet conditionnel, et hors tolérance.

Les conformités de l'essai sont définies telles que :

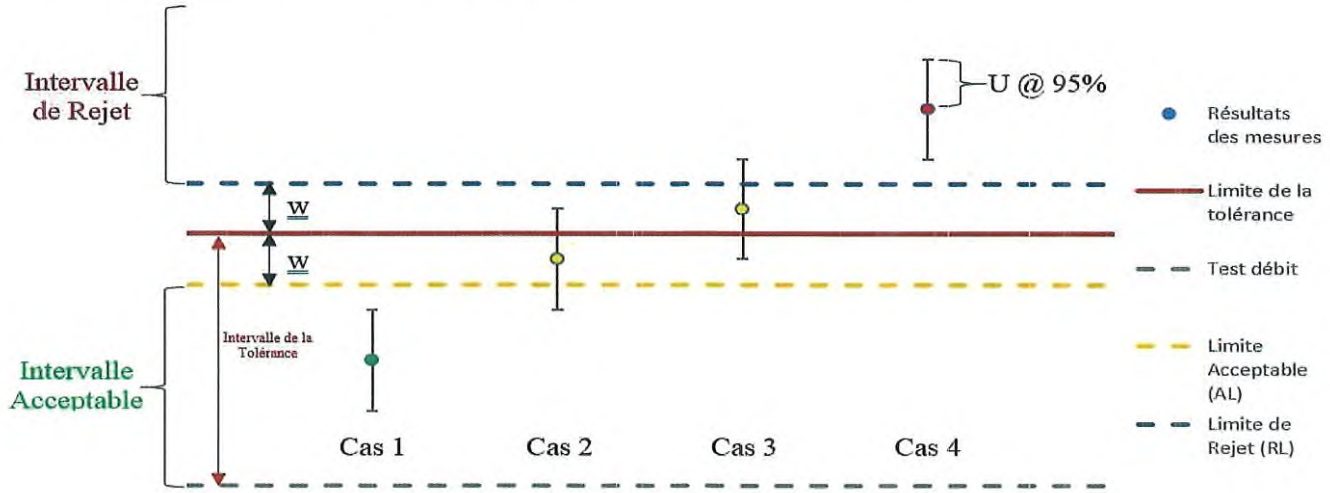

Explication de la règle Non-Binaire avec Bande de Garde

Cas 1** – Inférieur à la limite acceptable AL, **Statut : Dans les tolérances (In tolerance).

- Le résultat de la mesure est à l'intérieur de l'intervalle acceptable. Cependant, l'estimation du risque en assumant la probabilité d'une distribution normale d'être à l'extérieur de la limite de la tolérance est < 2.5%. L'incertitude de l'essai est directement prise en considération. Couleur verte.

Cas 2** – Inférieur à la limite de la tolérance TL, supérieur à la limite acceptable AL, **Statut : Dans les tolérances-Conditionnel.

- Le résultat de la mesure est à l'extérieur de l'intervalle acceptable mais inférieur à la limite de la tolérance. Cependant, la valeur observée est située dans la bande de garde w = TL-AL et le statut du résultat est conditionnel à l'évaluation du risque du client. L'incertitude de la mesure est directement prise en considération. Couleur jaune.

Cas 3** – Supérieur à la limite de la tolérance, inférieur à RL, **Statut : Hors tolérance-Conditionnel.

- Le résultat de la mesure est supérieur à la limite de la tolérance mais à l'extérieur de l'intervalle de rejet. Cependant, la valeur observée est située dans la bande de garde w = TL-RL et le statut du résultat est conditionnel à l'évaluation du risque du client. L'incertitude de la mesure est directement prise en considération. Couleur jaune.

Cas 4** – Supérieur à la limite de rejet RL, **Statut : Hors-tolérance (Out of tolerance).

- Le résultat de la mesure est à l'intérieur de l'intervalle de rejet. L'incertitude de l'essai est directement prise en considération. Couleur rouge.

©2020 Polycontrols — Le présent document ne peut être reproduit, sinon en entier, que par l'approbation écrite des laboratoires d'étalonnages de la compagnie Polycontrols inc. 3650 boul. Matte (Local A-1), Brossard (Québec), Canada, J4Y 2Z2
Tel : (450) 444-3600 Fax : (450) 444-1088 www.polycontrols.com

POLYCONTROLS
INTEGRATION • CALIBRATION • INSTRUMENTATION

CLAS NRC·CNRC CLAS 2009-02

SCC Accredited LAB Accredité CCN #655

CERTIFICAT D'ÉTALONNAGE # 13438

Date d'étalonnage : 2020-12-22
Date d'émission du certificat : 2020-12-23

Services Polytests
695 B Gaudette street
St-Jean-sur-Richelieu, Québec, Canada
J3B 7S7

Étalonnage d'un
Shinigawa DCDa-2c S/N : 23543

CONFORMITÉ AU PROGRAMME DE QUALITÉ

Tous les étalonnages sont effectués conformément au manuel d'assurance qualité de Polycontrols qui est conforme à la norme ISO/IEC 17025: 2017, à la norme ISO 9001 – 2015 ainsi qu'à toutes autres exigences de qualité définies dans la description d'achat des clients. Les résultats ne sont valides que pour l'objet soumis à l'essai ou à l'étalonnage. Si applicable, la règle de décision est décrite au certificat.

TRAÇABILITÉ

La traçabilité des étalons de débit au National Institute of Standards and Technology, NIST, est maintenue par les laboratoires de Fluke Corporation de Phoenix, Arizona et est conforme aux normes ISO/IEC 17025, ANSI/NCSL Z540-1-1994, ISO-10012-1, MIL-STD 45662A.

Le Service d'évaluation des laboratoires d'étalonnage (CLAS) du Conseil national de recherches du Canada (CNRC) a évalué et certifié la capacité d'étalonnage du laboratoire et la traçabilité au Système international d'unités (SI) ou à des étalons acceptables selon le CLAS. Le présent certificat d'étalonnage est délivré conformément aux conditions de certification du CLAS et aux conditions d'accréditation du Conseil canadien des normes (CCN). Le CLAS et le CCN ne garantissent pas l'exactitude des étalonnages individuels effectués par les laboratoires accrédités.

APTITUDE EN MATIÈRE DE MESURE ET D'ÉTALONNAGE - CMC

Les rendements métrologiques d'étalonnage ont une incertitude de ±0.2% de la lecture pour les mesures entre 5 SCCM à 10 SLPM, ±0.3% de la lecture pour les mesures entre 10 SLPM à 30 SLPM, ±0.2% de la lecture pour les mesures entre 30 SLPM à 3000 SLPM, ±0.3% de la lecture pour les mesures supérieures à 3000 SLPM jusqu'à 6000 SLPM et ±0.5% pour les mesures inférieures à 5 SCCM jusqu'à concurrence de 1 SCCM, équivalent air ou azote. Les incertitudes exprimées sont élargies avec un facteur d'élargissement k = 2, et ce, pour un niveau de confiance d'environ 95 %, dans l'hypothèse d'une distribution normale incluant la résolution de l'instrument. Le rapport d'incertitude des essais (RIE) de cet étalonnage respecte un ratio de 4:1 à moins d'indication contraire.

SOMMAIRE DES CONDITIONS DE L'INSTRUMENT EN TEST

Conditions initiales	En bon état
Travail Effectué	Étalonnage de l'instrument
	Lectures Initiales = Lectures finales, aucun ajustement
Résultats	Lectures finales dans les tolérances
Remarques	Fréquence d'étalonnage aux 12 mois

Bernard Poirier
Métrologiste

Responsable du laboratoire

©2012 Polycontrols • Le présent document ne peut être reproduit, sinon en entier, que par l'approbation écrite des laboratoires d'étalonnage de la compagnie Polycontrols inc. 3650 boul. Matte (Local A-1), Brossard (Québec), Canada, J4Y 2Z2
Tel: (450) 444-3600 Fax: (450) 444-1088 www.polycontrols.com

2021-01-12

POLYCONTROLS
INTEGRATION • CALIBRATION • INSTRUMENTATION

CLAS NRC·CNRC CLAS 2009-02

SCC Accredited LAB Accrédité CCN #655

Certificat d'étalonnage # 13438

Numéro de série:	23543	Station de mesure:	3
Date d'étalonnage:	2020-12-22	Procédure:	POS-CAL-005
Identification de l'instrument:	EM-179	Règle de décision:	Méthode #3

Instrument de mesure de référence utilisé pour l'étalonnage final

Description	Modèle	# Série	Traçabilité	Date dû
Fluke molbloc_30 slpm	3E4-VCR-V-Q	2403	1500285594	2021-06-10
Fluke molbox1	Molbox1	755	1500285062	2021-06-09
RTD Mist	M22	2208102	2020003043	2021-04-23
Module 44.5 PSI avec Baro 163671	Module 30	160659	2020003156	2021-04-28

Spécifications finales de l'appareil

Gaz	Air
Température d'opération	
Pression à l'entrée	
Pression à la sortie	
Température de référence	
Pression de référence	
Étendue d'échelle	10-2000 ALH
Signaux Entrée/Sortie	-
Alimentation	
Tolérance	±2 %O.R.

Condition d'étalonnage

Gaz	Air
Température ambiante	20.5 °C
Pression ambiante	1001.04 mbar
Orientation	Horizontale
Élastomère	Viton
Valve	

Lectures finales

Débit du test ALH	Instrument en test L	Valeurs mesurées Pression PSIA	Valeurs mesurées Température °C	Valeurs mesurées Référence L	Référence calculée L	Erreur calculée L	Tolérance acceptable L	Incertitude k = 2 L	TUR
406.2081	68.3650	14.5370	20.32	67.0974	67.6478	0.7172	1.3530	0.2242	>4
735.9483	124.0750	14.5375	20.26	121.7199	122.6911	1.3839	2.4538	0.4066	>4
1572.2745	264.2100	14.5401	20.55	259.4897	261.7685	2.4415	5.2354	0.8678	>4

Fc: 0,98995

2021. 01. 12

POLYCONTROLS
INTEGRATION • CALIBRATION • INSTRUMENTATION

CLAS NRC-CNRC CLAS 2009-02

SCC Accredited LAB Accrédité CCN #655

Certificat d'étalonnage # 13438

Numéro de série:	23543	Station de mesure:	3
Date d'étalonnage:	2020-12-22	Procédure:	POS-CAL-005
Identification de l'instrument:	EM-179	Règle de décision:	Méthode #3

Résultats finaux

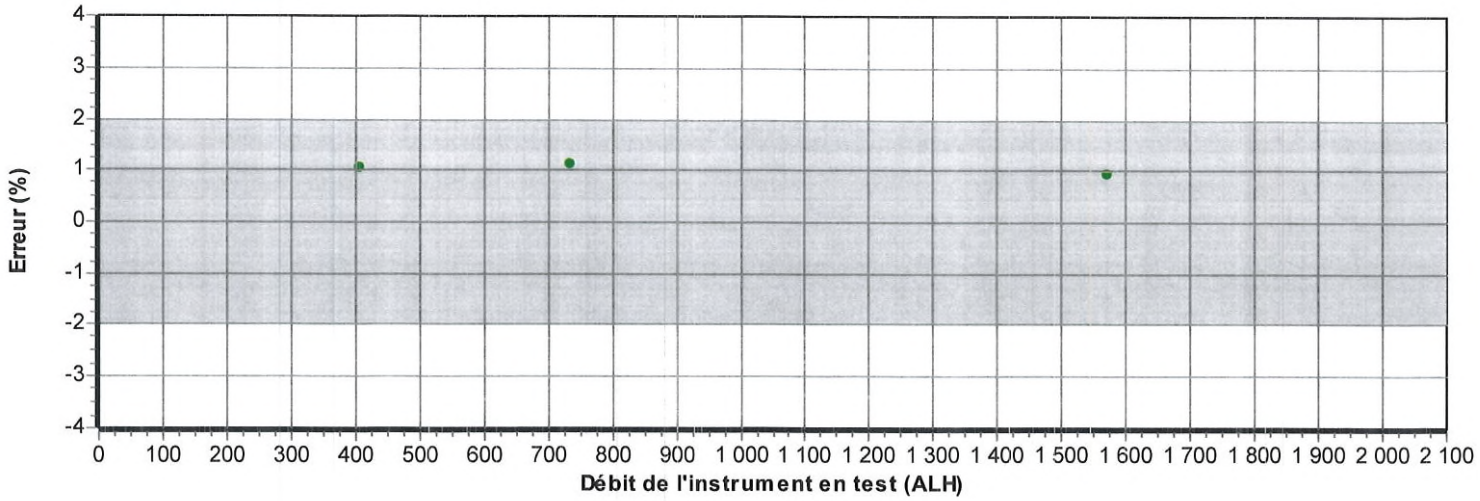

Voir l'annexe pour la règle de décision

2021-07-12

Annexe pour la règle de décision

Méthode 3 Statut de Conformité Non-binaire avec Bande de Garde en considérant l'incertitude de la mesure directement

Cette méthode tient compte d'une bande de garde pour définir l'intervalle acceptable et de rejet. La limite acceptable du résultat de la mesure est calculée selon la méthode mathématique suivante AL = TL – w et de rejet RL = TL + w, dont w = rU. Le multiple r de l'incertitude combiné élargie U peut être défini selon la table 1 section 5.2 du document ILAC G8 : 2019. L'incertitude de la mesure U est une incertitude combinée élargie ayant un niveau de confiance de 95% (k = 2). La règle de conformité non-binaire avec bande de garde est définie lorsqu'il y a quatre choix sur le statut de l'essai : dans la tolérance, acceptation conditionnelle, rejet conditionnel, et hors tolérance.

Les conformités de l'essai sont définies telles que :

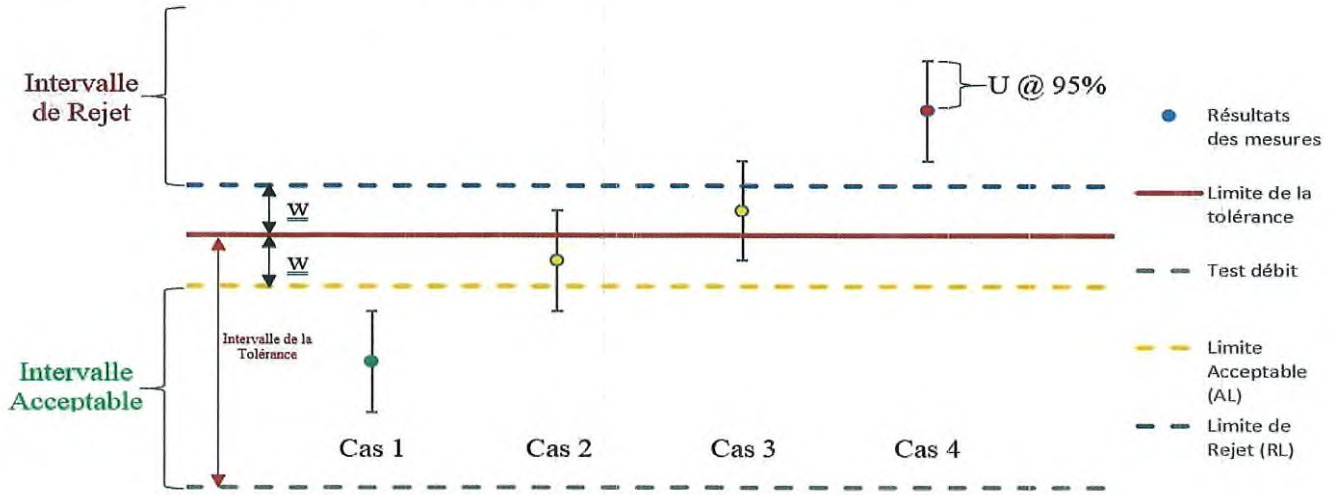

Explication de la règle Non-Binaire avec Bande de Garde

Cas 1** – Inférieur à la limite acceptable AL, **Statut : Dans les tolérances (In tolerance).

- Le résultat de la mesure est à l'intérieur de l'intervalle acceptable. Cependant, l'estimation du risque en assumant la probabilité d'une distribution normale d'être à l'extérieur de la limite de la tolérance est < 2.5%. L'incertitude de l'essai est directement prise en considération. Couleur verte.

Cas 2** – Inférieur à la limite de la tolérance TL, supérieur à la limite acceptable AL, **Statut : Dans les tolérances-Conditionnel.

- Le résultat de la mesure est à l'extérieur de l'intervalle acceptable mais inférieur à la limite de la tolérance. Cependant, la valeur observée est située dans la bande de garde w = TL-AL et le statut du résultat est conditionnel à l'évaluation du risque du client. L'incertitude de la mesure est directement prise en considération. Couleur jaune.

Cas 3** – Supérieur à la limite de la tolérance, inférieur à RL, **Statut : Hors tolérance-Conditionnel.

- Le résultat de la mesure est supérieur à la limite de la tolérance mais à l'extérieur de l'intervalle de rejet. Cependant, la valeur observée est située dans la bande de garde w = TL-RL et le statut du résultat est conditionnel à l'évaluation du risque du client. L'incertitude de la mesure est directement prise en considération. Couleur jaune.

Cas 4** – Supérieur à la limite de rejet RL, **Statut : Hors-tolérance (Out of tolerance).

- Le résultat de la mesure est à l'intérieur de l'intervalle de rejet. L'incertitude de l'essai est directement prise en considération. Couleur rouge.

©2020 Polycontrols — Le présent document ne peut être reproduit, sinon en entier, que par l'approbation écrite des laboratoires d'étalonnages de la compagnie Polycontrols inc. 3650 boul. Matte (Local A-1), Brossard (Québec), Canada, J4Y 2Z2
Tel : (450) 444-3600 Fax : (450) 444-1088 www.polycontrols.com

Instrumentation Saint•Laurent inc.

80 rue de la montagne
St-Joseph du lac
(Québec), J0N 1M0
Tél: (450) 473-6169
Fax: (450) 473-5207
Email: inst.st-laurent@videotron.ca

CERTIFICAT D'ÉTALONNAGE

No.Certificat: CE-EM-224 12/03/20

CLIENT	
Compagnie:	Services Polytests Inc
Adresse:	695 B rue Gaudette
	St-Jean-sur-Richelieu, Québec, J3B 7S7

SPÉCIFICATION DE CALIBRATION	
Procédure de service:	ISL-022
Précision requise:	+/- 1/32"
Fréquence d'étalonnage: (jours)	365

SPÉCIFICATION DE L'INSTRUMENT			
Type d'instrument:	Ruban à mesurer	**Type d'entrée:**	Mesure
Manufacturier:	Stanley	**Type de sortie:**	N/A
No. Model:	Leverlock 12'	**Type de mesure:**	Inch
No. Série:	N/A	**Gamme:**	0 à 12'
Emplacement:	Portable	**No. Machine:**	N/A

SPÉCIFICATION DE L'ÉTALON			
Étalon Utilisé:	Tape mesure-2	**No. du certificat d'étalonnage:**	2880456
No. Série:	20068976	**Dernière date d'étalonnage:**	18-Feb-20
Certificat fait par:	Starrett	**Prochaine date d'étalonnage:**	18-Feb-22
Commentaire:			

RÉSULTAT D'ÉTALONNAGE

Entrée Source	Valeur Donnée	Valeur Actuelle	Erreur de Déviation	Valeur après Étalonnage		Commentaire
1.00 "	1.00 "	1.00 "	0.00 "	1.00 "		
36.00 "	36.00 "	36.00 "	0.00 "	36.00 "		
72.00 "	72.00 "	72.00 "	0.00 "	72.00 "		
108.00 "	108.00 "	108.00 "	0.00 "	108.00 "		
132.00 "	132.00 "	132.00 "	0.00 "	132.00 "		

Conditions Environnementales: Température: 22 °C Humidité: 35 %RH

Commentaire:

Instrumentation St-Laurent Inc. Certifie que l'instrument ci-haut, rencontre ou excède les spécifications établies par le fabriquant. Les étalons utilisés pour effectuer l'étalonnage est retraçable au CNRC et/ou au NIST.

DATE D'ÉTALONNAGE / ÉMISSION DU CERTIFICAT	
Date d'Étalonnage:	12 Mars 2020
Date du prochain Étalonnage:	12 Mars 2021
Date d'émission du certificat:	12 Mars 2020

CONFORMITÉ D'ÉTALONNAGE	Avant	Après
Conforme:	X	X
Non Conforme:		

Martin Langlais - Technicien

2020 - MARS 30

Le droit d'auteur du présent certificat appartient à Inst. St-Laurent Inc et doit être reproduit intégralement, à moins d'une autorisation écrite de Inst. St-Laurent Inc.

22 Albiston Way
Auburn, ME 04210
800-292-6218
207-777-6218
Fax 207-777-6215
www.specair.com

Date: 08/14/2017

Certificate of Analysis

Customer:
VAC OXY

Results are reported in mole percent, unless otherwise indicated. Mixes are prepared via partial pressure methods, or gravimetrically, using high load high sensitivity electronic scales. Prior to use, scales are verified for accuracy using applicable NIST traceable weights; analyses are calibrated against reference materials traceable to NIST weights and/or NIST gas reference materials.

Cylinder Serial #: 809277 **Cylinder Size:** K **CGA Connection:** 350 **Fill Pressure:** 1450 PSI

Analysis: Certified Standard **Lot #:** 4722621

Component(s):	Requested Concentration(s):	Actual Concentration(s):
Carbon Monoxide	3%	3.0%
Carbon Dioxide	18%	18.0%
Oxygen	2%	2.0%
Nitrogen	BALANCE	BALANCE

Expiration Date: 08/2020

Approved By:

Tom Bosse

EM-275

5-sept 2017

The information contained herein has been prepared at your request by qualified experts. While we believe that the information is accurate within the limits of the analytical methods employed, and is complete to the extent of the specific analyses performed, we make no warranty or representation as to the suitability of the use of the information for any particular purpose. The information is offered with the understanding that any use of the information is at the sole discretion and risk of the user. In no event shall the liability arising out of the use of the information contained herein exceed the fee established for providing such information.

22 Albiston Way
Auburn, ME 04210
800-292-6218
207-777-6218
Fax 207-777-6215
www.specair.com

Date: 08/14/2017

Certificate of Analysis

Customer:
VAC OXY

Results are reported in mole percent, unless otherwise indicated. Mixes are prepared via partial pressure methods, or gravimetrically, using high load high sensitivity electronic scales. Prior to use, scales are verified for accuracy using applicable NIST traceable weights; analyses are calibrated against reference materials traceable to NIST weights and/or NIST gas reference materials.

Cylinder Serial #: K3886 **Cylinder Size:** K **CGA Connection:** 590 **Fill Pressure:** 1450 PSI

Analysis: Certified Standard **Lot #:** 4722622

Component(s):	Requested Concentration(s):	Actual Concentration(s):
Carbon Monoxide	1%	1.0%
Carbon Dioxide	10%	10.0%
Oxygen	10%	10.0%
Nitrogen	BALANCE	BALANCE

Expiration Date: 08/2020

Approved By:

Tom Bosse

Tom Bosse

5 sept 2017

EM. 276

The information contained herein has been prepared at your request by qualified experts. While we believe that the information is accurate within the limits of the analytical methods employed, and is complete to the extent of the specific analyses performed, we make no warranty or representation as to the suitability of the use of the information for any particular purpose. The information is offered with the understanding that any use of the information is at the sole discretion and risk of the user. In no event shall the liability arising out of the use of the information contained herein exceed the fee established for providing such information.

Instrumentation Saint•Laurent inc.
Accrédité ISO 17025

CLAS ARC-CNRC
CLAS 2010-02

SCC Accredited LAB
LAB Accrédité CCN
N°669

80 rue de la montagne
St-Joseph du lac
(Québec), J0N 1M0
Tél: (450) 473-6169
Fax: (450) 473-5207
Email: inst.st-laurent@videotron.ca

CERTIFICAT D'ÉTALONNAGE

No.Certificat: CE-EM-308 18/11/20

CLIENT	
Compagnie:	Services Polytests Inc
Adresse:	695 B rue Gaudette
	St-Jean-sur-Richelieu, Québec, J3B 7S7

SPÉCIFICATION DE CALIBRATION	
Procédure de service:	4IN9102
Précision requise:	+/- 5.0°C
Fréquence d'étalonnage: (jours)	365

SPÉCIFICATION DE L'INSTRUMENT			
Type d'instrument:	Thermocouple Type "K"	**Type d'entrée:**	Temperature
Manufacturier:	Omega	**Type de sortie:**	mV
No. Model:	Type K	**Type de mesure:**	Température
No. Série:	N.A.	**Gamme:**	Type K
Emplacement:	N.A.	**No. Machine:**	N.A.

SPÉCIFICATION DE L'ÉTALON			
Étalon Utilisé:	Probe etalon Hart	**No. du certificat d'étalonnage:**	2020000933
No. Série:	A26317/00361	**Dernière date d'étalonnage:**	11-Feb-20
Certificat fait par:	Alpha Control	**Prochaine date d'étalonnage:**	11-Feb-21
Commentaire:			

SPÉCIFICATION DE L'ÉTALON			
Étalon Utilisé:	Hart Scientific 2566	**No. du certificat d'étalonnage:**	2020003757
No. Série:	A7A799	**Dernière date d'étalonnage:**	20-May-20
Certificat fait par:	Alpha Controls	**Prochaine date d'étalonnage:**	20-May-21
Commentaire:	Meet the requirement as Secondary Standard Instrument (AMS2750E)		

SPÉCIFICATION DE L'ÉTALON			
Étalon Utilisé:	TC-BA2537	**No. du certificat d'étalonnage:**	BA2537
No. Série:		**Dernière date d'étalonnage:**	28-Apr-20
Certificat fait par:	GeoCorp	**Prochaine date d'étalonnage:**	28-Apr-21
Commentaire:			

RÉSULTAT D'ÉTALONNAGE

Entrée Source	Valeur Donnée	Valeur Actuelle	Erreur de Déviation	Valeur après Étalonnage	Incertitude Élargie	Commentaire
100.0 °C	100.0 °C	99.9 °C	-0.1 °C	99.9 °C	2 °C	Conforme
650.0 °C	650.0 °C	650.7 °C	+0.7 °C	650.7 °C	2 °C	Conforme
925.0 °C	925.0 °C	925.9 °C	+0.9 °C	925.9 °C	2 °C	Conforme

Conditions Environnementales: Température: 22 °C Humidité: 48 %RH

Type d'Étalonnage:

2020-11-24

5F09102

Le droit d'auteur du présent certificat appartient à Inst. St-Laurent Inc et doit être reproduit intégralement, à moins d'une autorisation écrite de Inst. St-Laurent Inc.

Instrumentation Saint•Laurent inc.
Accrédité ISO 17025

CLAS NRC-CNRC
CLAS 2010-02

SCC Accredited LAB
LAB Accrédité CCN
N°669

80 rue de la montagne
St-Joseph du lac
(Québec), J0N 1M0
Tél: (450) 473-6169
Fax: (450) 473-5207
Email: inst.st-laurent@videotron.ca

CERTIFICAT D'ÉTALONNAGE

No.Certificat: CE-EM-308 18/11/20

CLIENT	
Compagnie:	Services Polytests Inc
Adresse:	695 B rue Gaudette
	St-Jean-sur-Richelieu, Québec, J3B 7S7

SPÉCIFICATION DE CALIBRATION	
Procédure de service:	4IN9102
Précision requise:	+/- 5.0°C
Fréquence d'étalonnage: (jours)	365

SPÉCIFICATION DE L'INSTRUMENT			
Type d'instrument:	Thermocouple Type "K"	**Type d'entrée:**	Temperature
Manufacturier:	Omega	**Type de sortie:**	mV
No. Model:	Type K	**Type de mesure:**	Température
No. Série:	N.A.	**Gamme:**	Type K
Emplacement:	N.A.	**No. Machine:**	N.A.

Instrumentation St-Laurent Inc. Certifie que l'instrument ci-haut, rencontre ou excède les spécifications établies par le fabriquant. Le système qualité de l'entreprise est conforme aux exigences de la norme ISO 17025 et les étalons utilisés pour effectuer l'étalonnage est retraçable au CNRC et/ou au NIST. Le degré d'incertitude est basé sur un niveau de confiance=95%, K=2.

DATE D'ÉTALONNAGE / ÉMISSION DU CERTIFICAT	
Date d'Étalonnage:	18 Novembre 2020
Date du prochain Étalonnage:	18 Novembre 2021
Date d'émission du certificat:	18 Novembre 2020

CONFORMITÉ D'ÉTALONNAGE	Avant	Après
Conforme:	X	X
Non Conforme:		

Le Service d'évaluation des laboratoires d'étalonnage (CLAS) du Conseil national de recherches du Canada (CNRC) a évalué et certifié la capacité d'étalonnage du laboratoire et la traçabilité au Système international d'unités (SI) ou à des étalons acceptables selon le CLAS. Le présent certificat d'étalonnage est délivré conformément aux conditions de certification du CLAS et aux conditions d'accréditation du Conseil canadien des normes (CCN). Numéro d'accréditation du CCN: # 669. Le CLAS et le CCN ne garantissent pas l'exactitude des étalonnages individuels effectués par les laboratoires accrédités.

Martin Langlais - Technicien

5F09102

Le droit d'auteur du présent certificat appartient à Inst. St-Laurent Inc et doit être reproduit intégralement, à moins d'une autorisation écrite de Inst. St-Laurent Inc.

POLYCONTROLS
INTEGRATION • CALIBRATION • INSTRUMENTATION

CLAS
NRC·CNRC
CLAS 2009-02

SCC Accredited LAB
LAB Accrédité CCN
#655

CERTIFICAT D'ÉTALONNAGE # 13437

Date d'étalonnage : 2020-12-22
Date d'émission du certificat : 2020-12-23

Services Polytests
695 B Gaudette street
St-Jean-sur-Richelieu, Québec, Canada
J3B 7S7

Étalonnage d'un
Débitmètre à déplacement positif Shinigawa DCSDa-2C S/N : S8020

CONFORMITÉ AU PROGRAMME DE QUALITÉ

Tous les étalonnages sont effectués conformément au manuel d'assurance qualité de Polycontrols qui est conforme à la norme ISO/IEC 17025: 2017, à la norme ISO 9001 – 2015 ainsi qu'à toutes autres exigences de qualité définies dans la description d'achat des clients. Les résultats ne sont valides que pour l'objet soumis à l'essai ou à l'étalonnage. Si applicable, la règle de décision est décrite au certificat.

TRAÇABILITÉ

La traçabilité des étalons de débit au National Institute of Standards and Technology, NIST, est maintenue par les laboratoires de Fluke Corporation de Phoenix, Arizona et est conforme aux normes ISO/IEC 17025, ANSI/NCSL Z540-1-1994, ISO-10012-1, MIL-STD 45662A.

Le Service d'évaluation des laboratoires d'étalonnage (CLAS) du Conseil national de recherches du Canada (CNRC) a évalué et certifié la capacité d'étalonnage du laboratoire et la traçabilité au Système international d'unités (SI) ou à des étalons acceptables selon le CLAS. Le présent certificat d'étalonnage est délivré conformément aux conditions de certification du CLAS et aux conditions d'accréditation du Conseil canadien des normes (CCN). Le CLAS et le CCN ne garantissent pas l'exactitude des étalonnages individuels effectués par les laboratoires accrédités.

APTITUDE EN MATIÈRE DE MESURE ET D'ÉTALONNAGE - CMC

Les rendements métrologiques d'étalonnage ont une incertitude de ±0.2% de la lecture pour les mesures entre 5 SCCM à 10 SLPM, ±0.3% de la lecture pour les mesures entre 10 SLPM à 30 SLPM, ±0.2% de la lecture pour les mesures entre 30 SLPM à 3000 SLPM, ±0.3% de la lecture pour les mesures supérieures à 3000 SLPM jusqu'à 6000 SLPM et ±0.5% pour les mesures inférieures à 5 SCCM jusqu'à concurrence de 1 SCCM, équivalent air ou azote. Les incertitudes exprimées sont élargies avec un facteur d'élargissement k = 2, et ce, pour un niveau de confiance d'environ 95 %, dans l'hypothèse d'une distribution normale incluant la résolution de l'instrument. Le rapport d'incertitude des essais (RIE) de cet étalonnage respecte un ratio de 4:1 à moins d'indication contraire.

SOMMAIRE DES CONDITIONS DE L'INSTRUMENT EN TEST

Conditions initiales	En bon état
Travail Effectué	Étalonnage de l'instrument.
Résultats	Lectures initiales dans/hors tolérances-conditionnel avec K facteur de 1.02
	Lectures finales dans les tolérances sans K facteur
Remarques	Fréquence d'étalonnage aux 12 mois

Bernard Poirier
Métrologiste

Responsable du laboratoire

©2012 Polycontrols • Le présent document ne peut être reproduit, sinon en entier, que par l'approbation écrite des laboratoires d'étalonnage de la compagnie Polycontrols inc. 3650 boul. Matte (Local A-1), Brossard (Québec), Canada, J4Y 2Z2
Tel: (450) 444-3600 Fax: (450) 444-1088 www.polycontrols.com

POLYCONTROLS
INTEGRATION • CALIBRATION • INSTRUMENTATION

CLAS NRC-CNRC CLAS 2009-02

SCC Accredited LAB Accrédité CCN #655

Certificat d'étalonnage # 13437

Numéro de série:	S8020	Station de mesure:	3
Date d'étalonnage:	2020-12-22	Procédure:	POS-CAL-005
Identification de l'instrument:	EM 318	Règle de décision:	Méthode #3

Instrument de mesure de référence utilisé pour l'étalonnage initial

Description	Modèle	# Série	Traçabilité	Date dû
Fluke molbloc_30 slpm	3E4-VCR-V-Q	2403	1500285594	2021-06-10
Fluke molbox1	Molbox1	755	1500285062	2021-06-09
RTD Mist	M22	2208102	2020003043	2021-04-23
Module 44.5 PSI avec Baro 163671	Module 30	160659	2020003156	2021-04-28

Spécifications initiales de l'appareil		Condition d'étalonnage	
Gaz	Air	Gaz	Air
Température d'opération		Température ambiante	20 °C
Pression à l'entrée		Pression ambiante	1000.67 mbar
Pression à la sortie		Orientation	
Température de référence		Élastomère	
Pression de référence		Valve	
Étendue d'échelle	10-2000 ALH		
Signaux Entrée/Sortie	-		
Alimentation			
Tolérance ±2 %O.R.			

Lectures initiales

Débit du test ALH	Instrument en test L	Valeurs mesurées Pression PSIA	Valeurs mesurées Température °C	Valeurs mesurées Référence L	Référence calculée L	Erreur calculée L	Tolérance acceptable L	Incertitude k = 2 L	TUR
402.2104	68.1309	14.5217	20.09	66.3221	66.8849	1.2460	1.3377	0.2216	>4
701.6001	119.1870	14.5233	20.03	115.6677	116.6124	2.5746	2.3322	0.3863	>4
1580.7486	268.4946	14.5355	19.98	261.3017	263.1697	5.3249	5.2634	0.8718	>4

POLYCONTROLS
INTEGRATION • CALIBRATION • INSTRUMENTATION

CLAS NRC·CNRC CLAS 2009-02

SCC Accredited LAB Accrédité CCN #655

Certificat d'étalonnage # 13437

Numéro de série:	S8020	Station de mesure:	3
Date d'étalonnage:	2020-12-22	Procédure:	POS-CAL-005
Identification de l'instrument:	EM 318	Règle de décision:	Méthode #3

Résultats initiaux

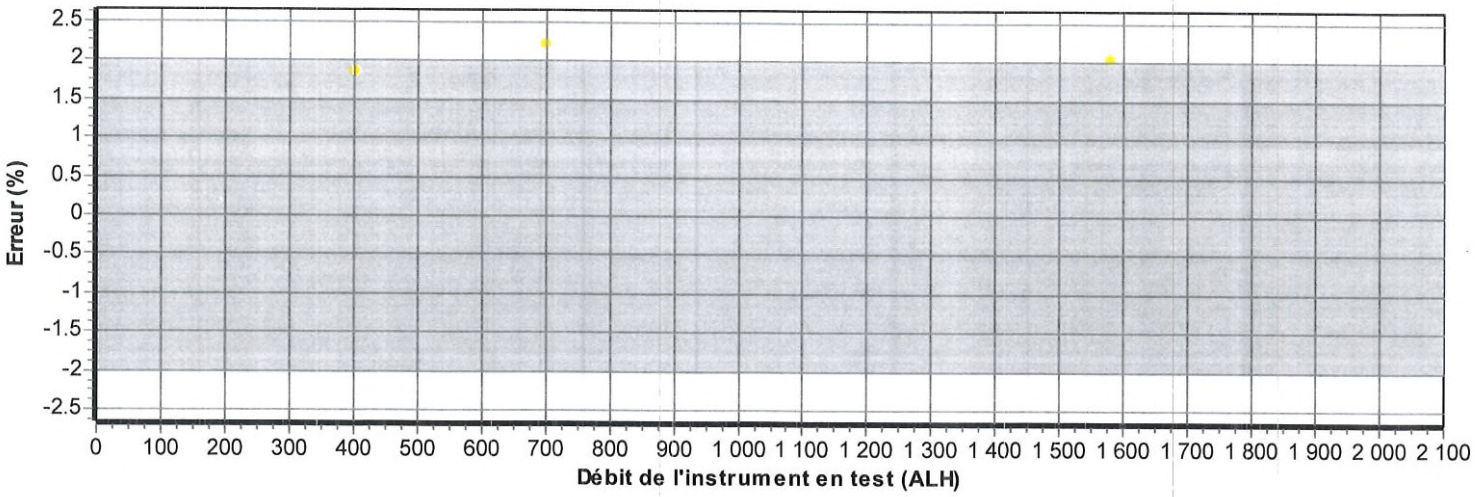

Voir l'annexe pour la règle de décision

POLYCONTROLS
INTEGRATION • CALIBRATION • INSTRUMENTATION

CLAS NRC·CNRC CLAS 2009-02

SCC Accredited LAB Accrédité CCN #655

Certificat d'étalonnage # 13437

Numéro de série:	S8020	Station de mesure:	3
Date d'étalonnage:	2020-12-22	Procédure:	POS-CAL-005
Identification de l'instrument:	EM 318	Règle de décision:	Méthode #3

Instrument de mesure de référence utilisé pour l'étalonnage final

Description	Modèle	# Série	Traçabilité	Date dû
Fluke molbloc_30 slpm	3E4-VCR-V-Q	2403	1500285594	2021-06-10
Fluke molbox1	Molbox1	755	1500285062	2021-06-09
RTD Mist	M22	2208102	2020003043	2021-04-23
Module 44.5 PSI avec Baro 163671	Module 30	160659	2020003156	2021-04-28

Spécifications finales de l'appareil		Condition d'étalonnage	
Gaz	Air	Gaz	Air
Température d'opération		Température ambiante	20 °C
Pression à l'entrée		Pression ambiante	1000.6 mbar
Pression à la sortie		Orientation	
Température de référence		Élastomère	
Pression de référence		Valve	
Étendue d'échelle	10-2000 ALH		
Signaux Entrée/Sortie	-		
Alimentation			
Tolérance ±2 %O.R.			

Lectures finales

Débit du test ALH	Instrument en test L	Valeurs mesurées Pression PSIA	Température °C	Référence L	Référence calculée L	Erreur calculée L	Tolérance acceptable L	Incertitude k = 2 L	TUR
402.2166	66.7950	14.5217	20.09	66.3221	66.8857	-0.0907	1.3377	0.2216	>4
701.6108	116.8500	14.5233	20.03	115.6677	116.6139	0.2361	2.3323	0.3863	>4
1580.7591	263.2300	14.5355	19.98	261.3017	263.1716	0.0584	5.2634	0.8718	>4

F_c : 1,00136

2021-01-12

POLYCONTROLS
INTEGRATION • CALIBRATION • INSTRUMENTATION

CLAS NRC·CNRC CLAS 2009-02

SCC Accredited LAB Accrédité CCN #655

Certificat d'étalonnage # 13437

Numéro de série:	S8020	Station de mesure:	3
Date d'étalonnage:	2020-12-22	Procédure:	POS-CAL-005
Identification de l'instrument:	EM 318	Règle de décision:	Méthode #3

Résultats finaux

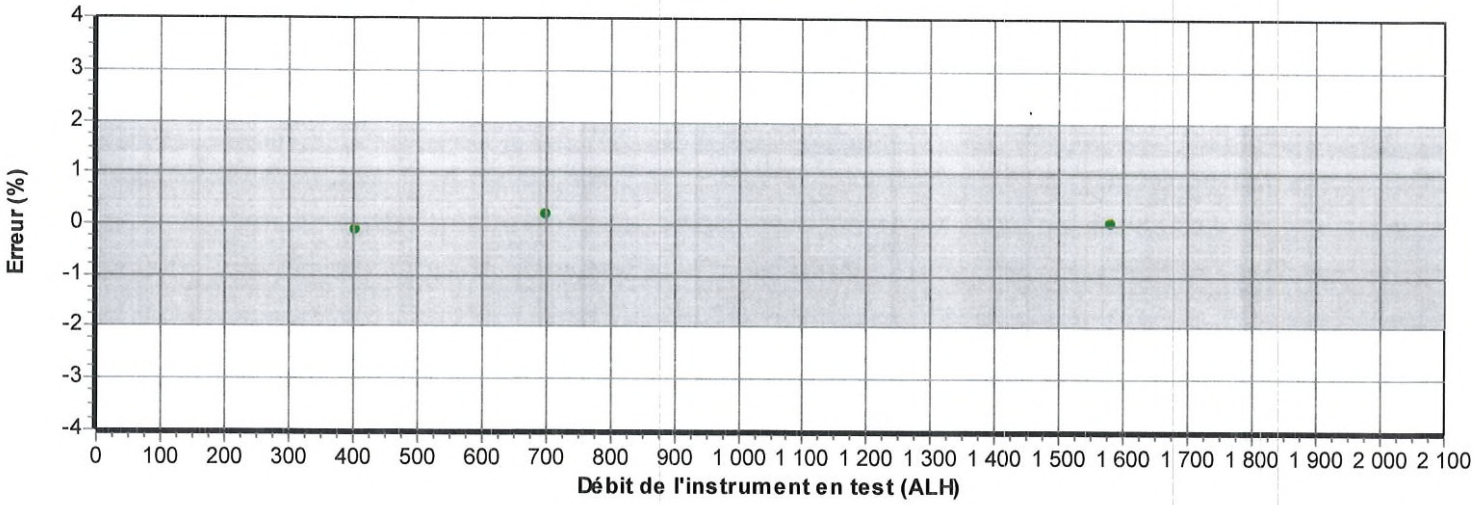

Voir l'annexe pour la règle de décision

2021. 01. 12

Annexe pour la règle de décision

Méthode 3 Statut de Conformité Non-binaire avec Bande de Garde en considérant l'incertitude de la mesure directement

Cette méthode tient compte d'une bande de garde pour définir l'intervalle acceptable et de rejet. La limite acceptable du résultat de la mesure est calculée selon la méthode mathématique suivante AL = TL – w et de rejet RL = TL + w, dont w = rU. Le multiple r de l'incertitude combiné élargie U peut être défini selon la table 1 section 5.2 du document ILAC G8 : 2019. L'incertitude de la mesure U est une incertitude combinée élargie ayant un niveau de confiance de 95% (k = 2). La règle de conformité non-binaire avec bande de garde est définie lorsqu'il y a quatre choix sur le statut de l'essai : dans la tolérance, acceptation conditionnelle, rejet conditionnel, et hors tolérance.

Les conformités de l'essai sont définies telles que :

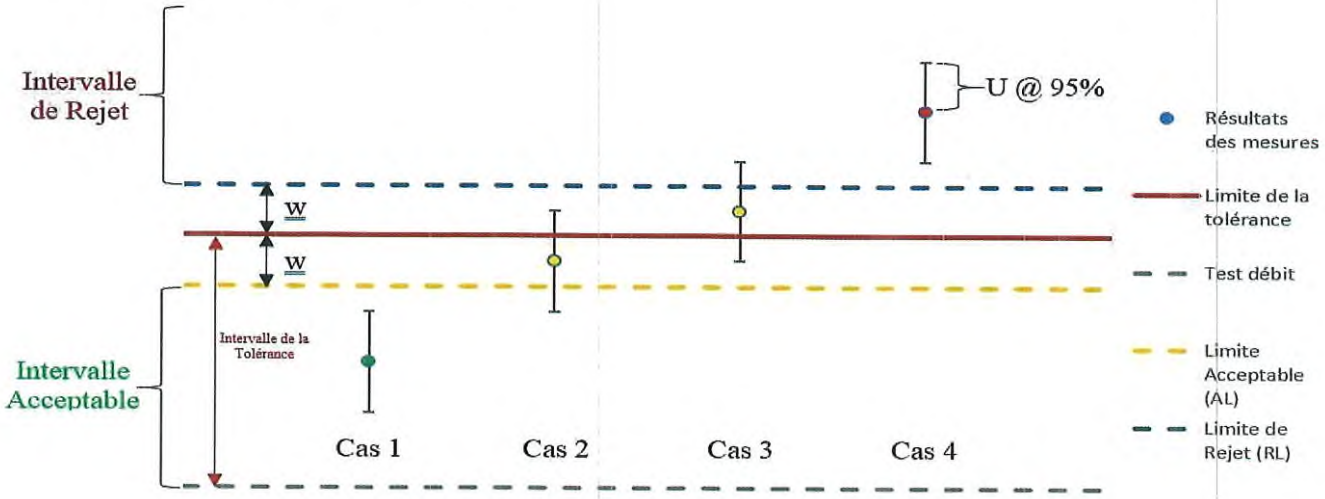

Explication de la règle Non-Binaire avec Bande de Garde

Cas 1 – *Inférieur à la limite acceptable AL*, ***Statut : Dans les tolérances (In tolerance).***

- Le résultat de la mesure est à l'intérieur de l'intervalle acceptable. Cependant, l'estimation du risque en assumant la probabilité d'une distribution normale d'être à l'extérieur de la limite de la tolérance est < 2.5%. L'incertitude de l'essai est directement prise en considération. Couleur verte.

Cas 2 – *Inférieur à la limite de la tolérance TL, supérieur à la limite acceptable AL*, ***Statut : Dans les tolérances-Conditionnel.***

- Le résultat de la mesure est à l'extérieur de l'intervalle acceptable mais inférieur à la limite de la tolérance. Cependant, la valeur observée est située dans la bande de garde w = TL-AL et le statut du résultat est conditionnel à l'évaluation du risque du client. L'incertitude de la mesure est directement prise en considération. Couleur jaune.

Cas 3 – *Supérieur à la limite de la tolérance, inférieur à RL*, ***Statut : Hors tolérance-Conditionnel.***

- Le résultat de la mesure est supérieur à la limite de la tolérance mais à l'extérieur de l'intervalle de rejet. Cependant, la valeur observée est située dans la bande de garde w = TL-RL et le statut du résultat est conditionnel à l'évaluation du risque du client. L'incertitude de la mesure est directement prise en considération. Couleur jaune.

Cas 4 – *Supérieur à la limite de rejet RL*, ***Statut : Hors-tolérance (Out of tolerance).***

- Le résultat de la mesure est à l'intérieur de l'intervalle de rejet. L'incertitude de l'essai est directement prise en considération. Couleur rouge.

©2020 Polycontrols — Le présent document ne peut être reproduit, sinon en entier, que par l`approbation écrite des laboratoires d`étalonnages de la compagnie Polycontrols inc. 3650 boul. Matte (Local A-1), Brossard (Québec), Canada, J4Y 2Z2
Tel : (450) 444-3600 Fax : (450) 444-1088 www.polycontrols.com

APPENDIX 4: Unit pre burn

ET	Scale Weight	TUNNEL TEMP	FLUE TEMP	METER TEMP	LEFT SIDE TEMP	RT SIDE TEMP	FB TOP TEMP	FB BOT TEMP	AVG APPL TEMP	AMB TEMP	% O2	% CO2	% CO
	9,89	88,64	233,31	71	365	376	397	376	359	71	17,73	0,79	0,01
5	9,81	94	297	71	353	363	360	366	344	71	17,49	0,9	-0,02
10	9,6	86	231	72	336	345	334	356	327	71	17,42	0,88	-0,02
15	9,51	85	218	73	318	325	313	347	310	71	17,31	1,01	-0,02
20	9,28	84	217	74	302	307	310	337	298	71	16,2	2,19	0,03
25	8,89	86	249	76	288	292	357	327	298	72	13,85	4,87	0,01
30	8,46	87	267	77	279	282	375	318	294	72	15,12	4,01	0
35	7,8	90	302	78	274	277	450	310	304	72	13,04	5,96	0,03
40	7,2	91	306	80	277	278	485	303	311	72	13,44	5,65	-0,01
45	6,59	92	314	81	284	282	526	296	321	72	13,22	5,84	-0,01
50	5,99	93	326	83	293	290	567	289	332	73	14,46	4,42	0
55	5,4	95	336	84	306	300	603	281	344	73	14,34	4,43	0,12
60	4,89	94	329	85	320	313	601	274	349	73	14,79	4,01	-0,03
65	4,3	96	335	86	335	328	619	267	359	73	14,53	4,28	0,02
70	3,79	96	341	87	352	343	634	262	369	73	14,67	4,11	0,06
75	3,2	96	341	88	371	358	641	259	379	74	14,79	3,98	0,08
80	2,78	96	331	89	391	373	628	258	386	74	14,81	3,78	0,09
85	2,41	95	311	90	412	388	611	259	391	74	14,93	3,63	-0,03
90	2,19	93	291	91	428	401	587	263	395	74	15,24	3,2	-0,03
95	2,01	92	274	92	440	411	561	268	396	74	15,42	3,04	-0,03
100	1,79	91	263	92	445	417	532	274	394	74	15,51	2,93	-0,03
105	1,68	90	253	93	447	421	514	280	392	74	15,49	2,98	-0,03
110	1,6	89	248	94	445	423	485	285	387	74	15,61	2,75	-0,03
115	1,49	89	243	94	442	423	466	289	383	74	15,65	2,74	-0,02
120	1,39	89	238	95	438	420	447	293	378	74	15,58	2,82	-0,03
125	1,3	88	234	95	433	418	432	296	374	75	15,62	2,73	-0,03
130	1,19	88	232	95	427	414	422	298	370	75	15,64	2,75	-0,02
135	1,17	88	231	96	422	409	412	301	367	75	15,68	2,73	-0,02
140	1,07	88	227	96	416	403	401	303	362	75	15,89	2,5	-0,02
145	1	87	224	97	409	399	391	306	358	75	15,81	2,59	-0,03
150	0,88	87	222	97	403	392	382	308	353	75	15,67	2,76	-0,03
155	0,89	87	219	97	397	386	375	310	349	75	15,7	2,73	-0,03
160	0,76	87	218	97	390	381	371	311	346	75	15,61	2,86	-0,02
165	0,69	87	217	98	385	375	364	312	342	75	15,78	2,63	-0,03
170	0,68	86	216	98	379	368	358	311	337	75	15,69	2,73	-0,02
175	0,58	86	215	98	373	363	353	311	333	75	15,63	2,82	-0,03
180	0,59	86	213	98	368	357	347	310	329	75	15,86	2,52	-0,02
185	0,48	86	213	98	363	351	340	310	325	75	15,96	2,44	-0,03
190	0,39	86	213	99	357	346	334	309	320	75	15,8	2,6	-0,02
195	0,38	85	213	99	351	341	331	307	317	75	15,8	2,58	-0,02
200	0,33	86	212	99	346	336	326	306	313	75	15,87	2,54	-0,03
205	0,3	85	210	99	340	331	322	304	309	75	15,91	2,56	-0,03
210	0,18	85	208	99	335	327	317	303	305	75	15,99	2,42	-0,03
215	0,18	85	207	99	330	323	314	301	301	75	15,89	2,53	-0,04
220	0,13	85	208	99	325	319	310	299	298	74	15,96	2,46	-0,02
225	0,07	85	207	99	321	315	306	296	294	75	16,18	2,15	-0,03
230	0,01	85	206	99	315	310	303	294	291	74	16,16	2,23	-0,03
235	9,2	117	84	78	407	415	553	498	440	78	17,7	0,09	-0,04
240	8,19	119	85	79	395	408	577	475	434	78	17,53	0,2	-0,04
245	7,18	121	86	80	386	402	606	449	431	78	17,62	0,19	-0,05

250	6,18	124	87	81	383	400	639	427	432	78	17,46	0,41	-0,04
255	5,2	125	88	82	386	405	681	411	440	78	17,45	0,47	-0,04
260	4,21	125	89	84	396	416	718	399	450	78	17,39	0,51	-0,03
265	3,1	125	90	85	410	431	747	391	462	79	17,37	0,55	-0,02
270	2,29	123	91	86	431	452	759	387	475	78	17,31	0,55	0,01
275	1,74	120	92	88	456	475	727	386	481	78	17,3	0,57	0,05
280	1,37	117	92	89	481	494	681	387	483	78	17,32	0,53	-0,02
285	1,18	114	92	90	498	508	643	391	483	78	17,47	0,43	-0,04
290	0,95	111	92	91	510	514	602	396	480	78	17,53	0,34	-0,05
295	0,85	109	91	92	515	514	567	403	475	78	17,56	0,33	-0,05
300	0,68	108	91	93	514	510	539	412	469	77	17,59	0,3	-0,05
305	0,57	106	91	94	510	506	517	421	464	78	17,64	0,29	-0,04
310	0,58	105	90	95	503	499	502	430	459	77	17,65	0,25	-0,05
315	0,35	104	90	96	494	492	483	436	452	77	17,68	0,27	-0,05
320	0,28	104	90	96	484	483	466	443	445	77	17,67	0,25	-0,04
325	0,18	103	89	97	473	474	452	447	438	77	17,72	0,23	-0,05
330	0,08	103	89	97	464	465	440	446	430	76	17,72	0,24	-0,05
335	-0,01	102	88	97	453	457	429	444	423	76	17,75	0,19	-0,05
340	9,59	104	77	68	424	420	472	523	432	69	17,31	0,21	-0,02
345	8,97	104	78	69	404	403	479	496	419	69	17,2	0,37	-0,02
350	8,03	108	78	70	387	389	535	468	416	69	16,69	0,94	-0,02
355	7,2	111	79	71	381	385	571	442	414	69	16,66	1	-0,02
360	6,39	112	79	72	382	385	601	419	416	69	16,56	1,13	-0,03
365	5,5	113	80	74	389	393	636	400	423	69	16,5	1,21	-0,03
370	4,57	114	81	75	401	405	689	384	436	70	16,4	1,29	0
375	3,68	115	82	77	417	418	720	370	447	70	17,13	0,51	0
380	2,89	114	83	78	435	437	743	362	460	71	16,94	0,61	0
385	2,41	112	84	79	453	457	715	357	463	70	17	0,53	-0,02
390	1,96	110	85	81	471	475	683	356	466	71	17,05	0,48	-0,03
395	1,68	107	85	82	485	488	646	356	465	71	17,08	0,44	-0,03
400	1,5	105	85	83	494	497	603	358	461	71	17,14	0,41	-0,03
405	1,27	103	84	84	498	500	563	360	456	70	17,16	0,36	-0,03
410	1,19	101	84	85	497	498	532	362	449	70	17,19	0,39	-0,03
415	0,98	100	84	86	493	496	513	365	445	70	17,18	0,37	-0,04
420	0,88	99	83	87	487	496	498	368	441	70	17,18	0,37	-0,03
425	0,79	99	83	87	480	495	484	371	436	70	17,18	0,41	-0,05
430	0,58	98	83	88	474	492	470	374	431	70	17,17	0,42	-0,03
435	0,49	98	83	89	466	487	461	377	426	70	17,16	0,4	-0,03
440	0,38	97	82	89	457	479	448	380	420	71	17,13	0,47	-0,03
445	0,28	97	82	90	449	470	435	380	413	70	17,07	0,53	-0,02
450	0,18	97	82	90	441	460	426	380	407	70	16,96	0,62	-0,03
455	0,07	97	82	91	432	452	418	380	401	70	16,91	0,72	-0,02
460	-0,03	96	81	91	424	445	410	380	395	70	16,89	0,72	-0,03
465	8,09	109	4147	70	406	407	539	515	434	69	5,92	13,83	0,4
470	6,99	114	4147	71	398	406	607	484	439	70	5,27	14,07	0,35
475	5,8	120	4147	71	395	409	670	457	446	70	4,83	14,9	0,91
480	4,57	121	4148	73	402	419	708	432	453	71	4,85	14,26	1,86
485	3,38	120	4148	74	416	436	726	415	461	71	4,56	14,25	2,28
490	2,39	117	4148	75	434	459	740	403	472	71	4,82	13,71	1,72
495	1,78	115	4148	77	455	484	742	396	485	71	6,23	12,64	0,04
500	1,28	112	4149	78	476	508	702	393	488	71	8,96	9,49	-0,03
505	1,06	109	4149	80	493	521	656	391	486	71	10,29	7,83	-0,03

510	0,88	106	4149	81	502	528	606	391	480	71	11,21	7,06	-0,03
515	0,78	104	4149	82	506	530	565	393	474	71	11,49	6,89	-0,03
520	0,57	103	4149	83	505	529	538	396	468	71	11,83	6,59	-0,03
525	0,48	101	4149	84	500	526	515	400	462	70	11,88	6,46	-0,03
530	0,38	100	4150	85	494	520	496	405	455	70	12,22	6,15	-0,03
535	0,28	100	4150	86	487	511	480	409	448	70	12,5	5,87	-0,03
540	0,17	99	4150	87	479	500	466	412	440	70	12,62	5,63	-0,03
545	-0,02	99	4149	88	471	489	453	414	433	70	12,81	5,51	-0,03
550	8,64	112	443	69	425	431	516	453	427	70	7,13	12,67	0,04
555	7,57	116	506	70	414	419	600	438	434	70	6,39	13,61	0,12
560	6,49	119	535	70	408	412	663	423	441	70	6,11	13,83	0,31
565	5,39	122	549	72	410	412	707	410	447	70	5,24	14,7	0,8
570	4,28	122	546	73	420	420	728	399	454	70	6,23	13,72	0,39
575	3,28	122	534	74	436	434	742	391	463	71	5,15	13,96	2,05
580	2,38	120	526	76	456	454	740	385	472	71	6,24	12,92	0,05
585	1,78	117	505	77	476	475	729	383	481	71	7,15	11,72	0
590	1,38	114	476	79	495	495	695	382	485	71	9,86	8,55	-0,02
595	1,18	110	444	80	510	509	639	385	481	71	11,93	6,53	-0,03
600	1,06	107	421	82	515	517	585	389	475	71	12,42	6,05	-0,02
605	0,98	105	407	83	512	519	548	391	466	71	12,55	6	-0,02
610	0,78	104	398	84	504	514	519	396	458	71	12,61	5,99	-0,04
615	0,68	103	389	85	495	507	497	402	450	71	12,65	5,95	-0,02
620	0,58	101	383	86	484	502	482	407	443	70	12,58	6,09	-0,04
625	0,48	101	380	87	473	496	466	409	435	70	12,88	5,8	-0,03
630	0,38	100	378	88	463	487	453	409	427	70	12,83	5,85	-0,03
635	0,18	99	372	88	455	477	440	410	420	70	13,2	5,34	-0,03
640	0,06	99	370	89	447	467	430	409	413	70	13,26	5,34	-0,03
645	-0,02	99	368	89	440	457	419	404	406	70	13,43	5,14	-0,02
650	9,3	111	397	68	414	420	487	480	425	70	14,63	3,78	-0,02
655	8,4	114	470	69	397	404	530	456	419	70	7,16	12,22	0,12
660	7,42	118	511	70	384	393	600	432	421	71	6,75	12,93	0,07
665	6,29	121	532	71	382	393	659	410	428	71	6,17	13,69	0,22
670	5,18	122	542	72	390	401	697	392	435	71	5,33	14,18	0,97
675	4,1	124	539	74	404	416	717	377	444	72	5,23	13,86	1,68
680	3,1	123	526	75	426	437	723	365	454	73	5,31	13,45	2
685	2,28	120	517	77	451	459	722	356	464	73	6,73	12,02	-0,02
690	1,79	118	489	79	475	484	700	351	471	73	8,45	10,05	-0,03
695	1,5	114	458	80	495	505	663	349	474	73	10,24	8,03	-0,03
700	1,28	111	432	81	510	518	616	349	471	73	11,41	6,88	-0,02
705	1,17	108	414	83	517	523	573	350	465	73	12,26	6,04	-0,03
710	0,99	107	402	84	516	519	536	352	457	73	12,29	6,08	-0,03
715	0,87	105	391	85	513	512	510	355	448	73	12,48	5,82	-0,01
720	0,77	104	383	86	506	502	488	357	439	73	12,77	5,57	-0,03
725	0,69	103	378	87	498	493	471	358	431	73	12,94	5,36	-0,01
730	0,53	102	374	88	488	483	457	359	423	72	12,89	5,5	-0,03
735	0,48	102	370	89	479	473	443	360	415	72	13,17	5,14	-0,03
740	0,38	101	368	89	468	464	429	360	407	72	13,43	4,82	-0,03
745	0,28	100	364	90	455	454	416	358	398	72	13,64	4,58	-0,02
750	0,18	100	362	91	443	445	406	354	390	72	13,67	4,62	-0,02
755	0,08	99	359	91	431	436	395	351	383	72	13,95	4,26	-0,02
760	0,06	99	355	91	420	426	384	348	375	72	14,1	4,02	-0,03
765	0	99	351	92	408	416	375	344	367	72	14,35	3,79	-0,02

770	-0,03	98	341	92	397	407	367	339	359	71	14,85	3,08	-0,02
775	8,7	111	398	72	413	417	446	464	410	72	13,29	4,81	-0,03
780	7,8	112	467	73	396	405	490	440	406	72	7,33	11,69	-0,01
785	6,69	115	505	74	385	396	545	417	406	72	6,09	13,48	0,08
790	5,69	118	530	75	384	394	602	397	412	72	5,05	14,63	0,5
795	4,61	120	535	76	392	401	651	382	423	73	4,64	14,81	1,17
800	3,6	120	529	78	409	416	685	370	437	73	4,71	14,26	1,61
805	2,67	118	523	79	430	437	702	362	449	73	5,4	13,54	0,22
810	2,07	117	502	81	454	459	696	357	459	73	6,52	12,03	-0,03
815	1,58	114	478	82	477	481	682	355	467	73	8,02	10,55	-0,03
820	1,31	111	451	83	497	498	641	356	468	73	10,08	8,07	-0,04
825	1,07	108	426	85	508	509	597	357	465	73	11,38	6,66	-0,03
830	0,98	106	409	86	511	512	555	359	458	73	11,8	6,23	-0,03
835	0,79	104	395	87	508	510	520	361	449	73	12,37	5,72	-0,03
840	0,68	103	385	88	500	505	491	365	440	73	12,76	5,34	-0,04
845	0,58	102	377	89	488	496	469	368	431	73	12,88	5,25	-0,03
850	0,47	101	369	89	475	487	450	370	422	73	12,87	5,27	-0,04
855	0,35	100	365	90	464	477	433	372	413	73	13,37	4,64	-0,03
860	0,36	99	361	91	452	466	418	373	405	72	13,31	4,77	-0,04
865	0,28	98	355	91	440	454	407	375	396	72	13,54	4,48	-0,03
870	0,19	98	350	92	429	442	396	375	388	72	13,79	4,25	-0,03
875	0,07	97	347	92	418	431	383	375	380	72	14,03	3,9	-0,03
880	-0,05	97	342	93	406	419	373	373	372	72	14,1	3,83	-0,03
885	8,6	114	438	69	4144	4144	4144	4144	4144	70	10,26	9,35	-0,03
890	7,7	115	496	70	4144	4144	4144	4144	4144	70	7,53	11,83	-0,01
895	6,68	117	513	71	4144	4144	4144	4144	4144	70	7,69	11,64	-0,02
900	5,78	118	523	72	4144	4144	4144	4144	4144	70	7,34	12,1	-0,02
905	4,89	120	537	73	4145	4145	4145	4145	4145	70	6,62	12,97	0
910	4,03	121	551	75	4145	4145	4145	4145	4145	71	5,72	13,96	0,23
915	3,23	121	546	76	4145	4145	4145	4145	4145	71	6,23	13,2	0,07
920	2,42	121	549	78	4145	4145	4145	4145	4145	71	4,98	13,75	0,41
925	1,78	118	514	79	4145	4145	4145	4145	4145	71	8,14	10,35	-0,02
930	1,48	114	481	81	4146	4146	4146	4146	4146	71	9,49	9,09	-0,03
935	1,08	112	459	82	4146	4146	4146	4146	4146	71	10,19	8,14	-0,03
940	0,88	109	440	83	4146	4146	4146	4146	4146	71	10,87	7,31	-0,03
945	0,79	107	428	84	4146	4146	4146	4146	4146	71	11,37	6,92	-0,02
950	0,57	106	421	85	4146	4146	4146	4146	4146	71	11,59	6,75	-0,02
955	0,48	105	414	86	4146	4146	4146	4146	4146	71	11,69	6,7	-0,02
960	0,36	104	406	87	4146	4146	4146	4146	4146	70	12,22	6,05	-0,02
965	0,18	103	404	88	4147	4147	4147	4147	4147	70	12,35	5,92	-0,02
970	0,09	102	399	88	4147	4147	4147	4147	4147	70	12,47	5,78	-0,02
975	-0,02	102	397	89	4147	4147	4147	4147	4147	70	12,68	5,59	-0,02
980	9,89	103	375	68	4144	4144	4144	4144	4144	69	13,9	4,04	-0,02
985	9,39	104	396	69	4144	4144	4144	4144	4144	69	10,77	7,45	-0,03
990	8,5	109	455	70	4144	4144	4144	4144	4144	69	7,94	10,9	-0,02
995	7,47	112	484	71	4144	4144	4144	4144	4144	69	7,68	11,46	-0,01
1000	6,58	115	504	72	4144	4144	4144	4144	4144	69	6,88	12,11	-0,01
1005	5,69	116	512	74	4144	4144	4144	4144	4144	69	7,26	11,92	-0,02
1010	4,7	118	523	75	4145	4145	4145	4145	4145	70	6,35	12,99	0,16
1015	3,79	119	538	77	4145	4145	4145	4145	4145	70	5,93	13,22	0,08
1020	3,07	119	532	78	4145	4145	4145	4145	4145	70	6,88	11,87	-0,02
1025	2,39	119	529	80	4145	4145	4145	4145	4145	71	4,95	13,01	0,13

1030	1,88	116	498	81	4146	4146	4146	4146	4146	71	8,08	9,47	-0,03
1035	1,66	112	460	82	4146	4146	4146	4146	4146	70	10,59	7,08	-0,02
1040	1,49	109	436	83	4146	4146	4146	4146	4146	70	11,13	6,76	-0,03
1045	1,38	107	419	84	4147	4147	4147	4147	4147	70	11,23	6,7	-0,03
1050	1,18	105	409	85	4147	4147	4147	4147	4147	70	11,42	6,48	-0,03
1055	1,08	103	398	86	4147	4147	4147	4147	4147	70	11,46	6,46	-0,02
1060	0,86	102	390	87	4147	4147	4147	4147	4147	70	11,51	6,44	-0,03
1065	0,78	102	385	88	4147	4147	4147	4147	4147	70	11,67	6,24	-0,03
1070	0,68	101	380	88	4147	4147	4147	4147	4147	70	12,3	5,51	-0,03
1075	0,58	100	374	89	4147	4147	4147	4147	4147	70	12,38	5,41	-0,02
1080	0,48	100	369	89	4147	4147	4147	4147	4147	70	12,59	5,18	-0,03
1085	0,39	99	368	90	4147	4147	4147	4147	4147	70	12,81	4,91	-0,02
1090	0,28	99	365	90	4147	4147	4147	4147	4147	70	13,07	4,63	-0,04
1095	0,17	99	362	91	4147	4147	4147	4147	4147	70	13,23	4,45	-0,03
1100	0,05	98	359	91	4147	4147	4147	4147	4147	70	13,26	4,39	-0,02
1105	-0,02	98	357	91	4147	4147	4147	4147	4147	70	13,51	4,12	-0,02
1110	9,61	113	391	73	4151	4151	4151	4151	4151	74	13,82	3,43	-0,04
1115	9,2	111	405	74	4152	4152	4152	4152	4152	74	11,32	7	-0,03
1120	8,28	116	465	75	4152	4152	4152	4152	4152	74	7,41	11,34	-0,03
1125	7,29	119	488	76	4152	4152	4152	4152	4152	74	7,15	11,54	-0,03
1130	6,39	121	501	77	4153	4153	4153	4153	4153	74	6,89	12,03	-0,01
1135	5,49	122	509	79	4153	4153	4153	4153	4153	75	6,34	12,65	0
1140	4,58	124	531	80	4153	4153	4153	4153	4153	75	5,12	13,88	0,27
1145	3,78	125	533	82	4154	4154	4154	4154	4154	75	6,38	12,18	0,11
1150	2,98	124	530	83	4154	4154	4154	4154	4154	75	4,37	13,85	0,7
1155	2,35	123	519	85	4154	4154	4154	4154	4154	76	6,35	11,5	-0,03
1160	1,9	121	486	86	4155	4155	4155	4155	4155	76	7,93	9,87	-0,04
1165	1,59	117	459	87	4155	4155	4155	4155	4155	76	9,12	8,5	-0,04
1170	1,39	114	434	88	4155	4155	4155	4155	4155	76	10,14	7,33	-0,04
1175	1,19	112	417	89	4156	4156	4156	4156	4156	76	10,79	6,75	-0,04
1180	1,08	110	404	90	4156	4156	4156	4156	4156	76	11,01	6,55	-0,03
1185	0,98	109	395	91	4156	4156	4156	4156	4156	76	11,24	6,26	-0,04
1190	0,77	108	388	92	4156	4156	4156	4156	4156	76	11,41	6,16	-0,04
1195	0,68	107	383	93	4156	4156	4156	4156	4156	76	11,63	5,85	-0,05
1200	0,56	106	374	94	4157	4157	4157	4157	4157	76	11,95	5,48	-0,03
1205	0,44	105	369	94	4157	4157	4157	4157	4157	75	12,06	5,42	-0,04
1210	0,38	105	364	95	4157	4157	4157	4157	4157	76	12,33	5,08	-0,04
1215	0,33	104	359	95	4157	4157	4157	4157	4157	75	12,64	4,7	-0,04
1220	0,2	104	358	96	4157	4157	4157	4157	4157	75	12,83	4,48	-0,04
1225	0,04	103	355	96	4157	4157	4157	4157	4157	75	13,09	4,11	-0,04
1230	0,08	103	348	96	4157	4157	4157	4157	4157	75	13,33	3,9	-0,04
1235	-0,02	102	344	97	4157	4157	4157	4157	4157	75	13,42	3,8	-0,03
1240	9,09	113	404	70	4146	4146	4146	4146	4146	72	13,5	3,91	-0,03
1245	8,2	116	469	70	4146	4146	4146	4146	4146	72	7,76	11,28	-0,03
1250	7,28	118	480	71	4146	4146	4146	4146	4146	72	8,28	10,66	-0,03
1255	6,39	119	490	73	4147	4147	4147	4147	4147	72	7,8	11,22	-0,02
1260	5,49	121	501	74	4147	4147	4147	4147	4147	73	7,32	11,73	-0,03
1265	4,59	123	525	76	4148	4148	4148	4148	4148	73	6,22	12,71	0,02
1270	3,77	122	511	77	4148	4148	4148	4148	4148	74	7,75	10,96	-0,03
1275	3,08	122	513	79	4148	4148	4148	4148	4148	74	6,12	12,71	0,09
1280	2,35	122	520	80	4149	4149	4149	4149	4149	74	5,84	12,56	0,02
1285	1,89	120	492	82	4149	4149	4149	4149	4149	74	8,07	9,95	-0,03

1290	1,42	117	466	83	4150	4150	4150	4150	4150	75	9,06	9,03	-0,04
1295	1,28	115	443	85	4150	4150	4150	4150	4150	75	10,53	7,23	-0,03
1300	1,08	112	426	86	4150	4150	4150	4150	4150	75	10,97	6,78	-0,03
1305	0,88	110	413	87	4150	4150	4150	4150	4150	75	11,22	6,55	-0,03
1310	0,81	109	405	88	4151	4151	4151	4151	4151	74	11,53	6,27	-0,03
1315	0,69	108	397	89	4151	4151	4151	4151	4151	74	11,57	6,28	-0,03
1320	0,58	107	390	90	4151	4151	4151	4151	4151	74	12,03	5,71	-0,03
1325	0,37	106	385	91	4151	4151	4151	4151	4151	74	11,98	5,8	-0,04
1330	0,28	106	380	91	4151	4151	4151	4151	4151	74	12,18	5,53	-0,03
1335	0,18	105	376	92	4151	4151	4151	4151	4151	74	12,64	5,04	-0,03
1340	0,08	105	372	92	4151	4151	4151	4151	4151	74	13,04	4,59	-0,03
1345	-0,03	104	364	93	4151	4151	4151	4151	4151	74	13,24	4,32	-0,03
1350	8,5	96	304	70	4147	4147	4147	4147	4147	72	14,96	2,41	-0,03
1355	8,3	87	236	71	4147	4147	4147	4147	4147	71	14,82	2,49	-0,03
1360	8,19	86	226	72	4147	4147	4147	4147	4147	71	14,44	2,96	-0,03
1365	7,89	86	233	73	4147	4147	4147	4147	4147	71	13,93	3,72	-0,02
1370	7,49	87	249	74	4148	4148	4148	4148	4148	71	11,29	6,97	-0,03
1375	6,89	89	287	76	4148	4148	4148	4148	4148	71	9,09	9,25	-0,03
1380	6,4	90	288	77	4148	4148	4148	4148	4148	72	9,33	9,6	-0,02
1385	5,79	92	313	78	4148	4148	4148	4148	4148	72	6,91	12,23	0,67
1390	5,19	93	325	80	4148	4148	4148	4148	4148	72	6,88	12,31	0,59
1395	4,59	94	333	81	4149	4149	4149	4149	4149	72	6,71	12,06	1,44
1400	3,9	94	334	82	4149	4149	4149	4149	4149	72	6,76	11,88	1,73
1405	3,28	95	334	84	4149	4149	4149	4149	4149	72	6,8	11,84	1,59
1410	2,78	94	331	85	4149	4149	4149	4149	4149	72	7,09	11,72	0,05
1415	2,39	94	320	86	4150	4150	4150	4150	4150	72	8,03	10,52	-0,02
1420	2,08	93	307	87	4150	4150	4150	4150	4150	73	8,4	9,8	-0,03
1425	1,88	92	291	88	4150	4150	4150	4150	4150	73	9,2	8,71	-0,04
1430	1,68	91	273	89	4150	4150	4150	4150	4150	73	9,96	7,76	-0,04
1435	1,58	89	259	89	4150	4150	4150	4150	4150	73	10,88	6,84	-0,03
1440	1,48	89	248	90	4150	4150	4150	4150	4150	73	10,79	7,02	-0,03
1445	1,37	88	241	91	4151	4151	4151	4151	4151	73	10,75	7,1	-0,03
1450	1,27	87	235	91	4151	4151	4151	4151	4151	73	10,38	7,51	-0,03
1455	1,29	86	231	92	4151	4151	4151	4151	4151	73	10,41	7,51	-0,03
1460	1,16	86	229	92	4151	4151	4151	4151	4151	73	10,64	7,29	-0,03
1465	1,07	86	228	93	4151	4151	4151	4151	4151	73	10,69	7,22	-0,03
1470	0,98	86	227	93	4151	4151	4151	4151	4151	73	10,82	7,04	-0,03
1475	0,88	85	226	93	4151	4151	4151	4151	4151	73	11,02	6,83	-0,03
1480	0,92	85	227	94	4151	4151	4151	4151	4151	72	11,12	6,7	-0,03
1485	0,76	85	225	94	4151	4151	4151	4151	4151	72	11,96	5,88	-0,02
1490	0,66	85	217	94	4151	4151	4151	4151	4151	72	11,7	6,03	-0,03
1495	0,58	84	213	94	4151	4151	4151	4151	4151	72	11,67	6,1	-0,03
1500	0,57	84	210	95	4151	4151	4151	4151	4151	72	11,92	5,84	-0,02
1505	0,48	84	210	95	4152	4152	4152	4152	4152	72	11,98	5,66	-0,03
1510	0,47	83	210	95	4152	4152	4152	4152	4152	72	11,88	5,92	-0,03
1515	0,38	83	210	95	4152	4152	4152	4152	4152	72	11,95	5,75	-0,03
1520	0,27	83	211	95	4152	4152	4152	4152	4152	72	11,99	5,77	-0,03
1525	0,28	83	212	95	4152	4152	4152	4152	4152	72	12,09	5,59	-0,02
1530	0,18	83	210	95	4152	4152	4152	4152	4152	72	12,26	5,46	-0,03
1535	0,09	83	209	96	4152	4152	4152	4152	4152	72	12,41	5,29	-0,03
1540	0,08	83	209	96	4152	4152	4152	4152	4152	72	12,45	5,19	-0,03
1545	-0,03	83	207	96	4152	4152	4152	4152	4152	72	13,04	4,42	-0,03

1550	9,82	92	304	66	4137	4137	4137	4137	4137	66	14,21	3,32	-0,01
1555	9,6	82	233	67	4138	4138	4138	4138	4138	66	14,85	2,25	-0,03
1560	9,39	81	238	68	4138	4138	4138	4138	4138	65	12,05	5,77	-0,01
1565	8,89	83	272	69	4138	4138	4138	4138	4138	66	9,55	8,81	-0,01
1570	8,3	85	298	70	4138	4138	4138	4138	4138	66	8,23	10,32	0,39
1575	7,69	87	317	71	4138	4138	4138	4138	4138	66	8,54	10,19	0,06
1580	6,96	88	333	73	4138	4138	4138	4138	4138	66	7,04	12,03	0,37
1585	6,29	90	349	74	4138	4138	4138	4138	4138	66	6,59	12,46	0,57
1590	5,59	91	357	76	4139	4139	4139	4139	4139	66	6,37	12,45	1,2
1595	4,99	92	362	77	4139	4139	4139	4139	4139	67	6,42	12,34	1,33
1600	4,19	93	360	78	4139	4139	4139	4139	4139	67	6,44	12,03	2,01
1605	3,59	93	360	79	4139	4139	4139	4139	4139	67	6,52	12	1,29
1610	3,01	92	354	81	4139	4139	4139	4139	4139	67	7,55	10,96	0,1
1615	2,69	90	328	82	4139	4139	4139	4139	4139	67	8,72	9,44	-0,02
1620	2,39	88	305	82	4139	4139	4139	4139	4139	67	9,71	7,9	-0,03
1625	2,22	87	289	83	4139	4139	4139	4139	4139	67	9,88	7,63	-0,02
1630	2,09	85	271	84	4140	4140	4140	4140	4140	67	10,39	7	-0,03
1635	1,99	84	257	85	4140	4140	4140	4140	4140	67	10,61	6,86	-0,02
1640	1,88	83	248	86	4140	4140	4140	4140	4140	67	10,66	6,85	-0,02
1645	1,79	82	240	86	4140	4140	4140	4140	4140	67	10,97	6,58	-0,02
1650	1,66	82	236	87	4140	4140	4140	4140	4140	67	10,97	6,56	-0,03
1655	1,57	81	232	87	4140	4140	4140	4140	4140	67	11,07	6,57	-0,02
1660	1,47	81	229	88	4140	4140	4140	4140	4140	67	11,3	6,36	-0,02
1665	1,48	80	226	88	4140	4140	4140	4140	4140	67	11,24	6,42	-0,02
1670	1,39	80	224	88	4140	4140	4140	4140	4140	67	11,24	6,38	-0,02
1675	1,28	80	222	89	4140	4140	4140	4140	4140	67	11,31	6,36	-0,03
1680	1,17	79	218	89	4140	4140	4140	4140	4140	67	11,74	5,88	-0,02
1685	1,18	79	214	89	4140	4140	4140	4140	4140	67	11,91	5,64	-0,02
1690	1,08	79	212	89	4140	4140	4140	4140	4140	67	12	5,57	-0,03
1695	0,99	79	212	90	4140	4140	4140	4140	4140	67	11,82	5,78	-0,02
1700	1	79	211	90	4140	4140	4140	4140	4140	67	11,8	5,81	-0,02
1705	0,88	79	211	90	4140	4140	4140	4140	4140	67	11,81	5,71	-0,02
1710	0,79	78	211	90	4140	4140	4140	4140	4140	67	11,94	5,68	-0,03
1715	0,68	78	212	90	4140	4140	4140	4140	4140	67	11,91	5,68	-0,02
1720	0,68	78	212	90	4140	4140	4140	4140	4140	67	11,97	5,59	-0,02
1725	0,59	78	213	90	4140	4140	4140	4140	4140	67	11,97	5,58	-0,02
1730	0,47	78	213	91	4140	4140	4140	4140	4140	67	12	5,61	-0,02
1735	0,47	78	212	91	4140	4140	4140	4140	4140	67	12,17	5,37	-0,03
1740	0,38	78	212	91	4140	4140	4140	4140	4140	67	12,49	5,05	-0,03
1745	0,24	78	211	91	4140	4140	4140	4140	4140	67	12,52	5,05	-0,02
1750	0,26	78	211	91	4140	4140	4140	4140	4140	67	12,54	4,89	-0,02
1755	0,17	78	211	91	4140	4140	4140	4140	4140	67	12,75	4,7	-0,02
1760	0,17	78	211	91	4141	4141	4141	4141	4141	66	12,84	4,72	-0,02
1765	0,09	78	207	91	4141	4141	4141	4141	4141	67	12,85	4,6	-0,04
1770	0,08	77	205	91	4141	4141	4141	4141	4141	67	12,85	4,68	-0,03
1775	-0,02	77	206	91	4141	4141	4141	4141	4141	67	12,97	4,38	-0,02
1780	9,69	103	363	67	4139	4139	4139	4139	4139	68	14,15	3,13	-0,02
1785	9,29	103	373	68	4139	4139	4139	4139	4139	68	13,12	4,33	-0,01
1790	8,6	112	464	69	4140	4140	4140	4140	4140	68	7,45	11,17	0,05
1795	7,61	118	496	70	4140	4140	4140	4140	4140	68	7,98	10,84	0,01
1800	6,54	121	517	71	4140	4140	4140	4140	4140	69	7,85	10,9	-0,01
1805	5,59	124	536	73	4140	4140	4140	4140	4140	69	7,89	10,81	0,01

1810	4,68	128	559	74	4140	4140	4140	4140	4140	70	7,72	10,98	0,2
1815	3,78	129	566	76	4141	4141	4141	4141	4141	70	8,84	9,33	0,06
1820	2,98	130	568	77	4141	4141	4141	4141	4141	70	8,41	9,38	0,18
1825	2,27	127	542	79	4141	4141	4141	4141	4141	71	10,53	7,13	-0,01
1830	1,88	122	500	80	4142	4142	4142	4142	4142	71	11,81	5,84	-0,03
1835	1,48	119	480	81	4142	4142	4142	4142	4142	71	11,64	5,81	-0,03
1840	1,28	116	459	82	4143	4143	4143	4143	4143	71	12,32	5,08	-0,03
1845	1,08	113	441	84	4143	4143	4143	4143	4143	71	12,81	4,49	-0,01
1850	0,89	112	433	85	4143	4143	4143	4143	4143	71	12,72	4,56	-0,02
1855	0,79	110	423	86	4144	4144	4144	4144	4144	71	12,71	4,61	-0,02
1860	0,58	109	417	87	4144	4144	4144	4144	4144	71	12,96	4,25	-0,01
1865	0,48	109	413	87	4144	4144	4144	4144	4144	71	13,16	4,06	-0,01
1870	0,41	108	409	88	4144	4144	4144	4144	4144	71	13,22	4,06	-0,01
1875	0,18	107	404	89	4144	4144	4144	4144	4144	71	13,33	3,91	0
1880	0,12	107	397	89	4144	4144	4144	4144	4144	71	13,56	3,66	-0,01
1885	-0,04	106	393	90	4144	4144	4144	4144	4144	71	13,75	3,43	-0,01
1890	1,3	65,5	372,17	67	112	96	272	81	134	65	19,8	0,13	-0,02
1895	2,51	66	356	68	132	115	315	96	157	65	19,81	0,12	-0,02
1900	5,01	66	393	68	143	125	328	110	169	65	19,8	0,16	-0,01
1905	4,5	66	400	68	162	140	351	122	186	65	19,8	0,16	-0,02
1910	3,82	67	440	68	181	157	451	135	220	65	19,8	0,17	-0,01
1915	9,82	67	551	68	206	179	531	150	253	66	19,78	0,18	-0,02
1920	9,16	68	487	68	233	202	538	164	273	67	19,8	0,14	-0,02
1925	8,31	68	508	68	254	223	583	174	296	67	19,73	0,15	-0,02
1930	7,72	68	508	68	277	246	589	182	312	68	19,74	0,14	-0,01
1935	7,01	69	509	69	300	268	599	192	329	67	19,73	0,15	-0,02
1940	6,41	69	517	69	320	290	620	205	348	67	19,69	0,13	-0,01
1945	5,71	69	522	69	336	313	633	219	365	67	19,69	0,17	-0,01
1950	5,02	70	541	69	350	337	661	233	385	68	19,67	0,17	-0,01
1955	4,42	70	541	70	363	364	665	245	395	68	19,65	0,17	-0,02
1960	10,73	70	538	70	373	388	634	261	398	68	19,65	0,15	-0,02
1965	10,1	71	513	70	382	401	596	269	394	68	19,63	0,15	-0,02
1970	9,66	71	494	70	385	408	564	272	389	69	19,6	0,17	-0,01
1975	9,12	71	479	71	385	413	540	274	384	69	19,6	0,15	-0,03
1980	8,72	72	475	71	383	415	531	276	382	69	19,6	0,19	-0,02
1985	8,32	72	493	71	380	418	527	280	381	70	19,63	0,18	-0,02
1990	11,62	72	472	72	375	420	544	284	384	70	19,62	0,17	-0,03
1995	11,02	72	477	72	372	419	540	287	382	69	19,6	0,14	-0,02
2000	10,53	72	480	72	374	413	548	290	383	69	19,61	0,18	-0,02
2005	9,92	72	481	72	380	407	562	293	387	69	19,62	0,18	-0,02
2010	9,32	72	488	72	388	404	593	296	395	69	19,61	0,14	-0,02
2015	8,69	72	493	73	399	406	611	299	403	69	19,61	0,19	-0,02
2020	8,12	73	499	73	413	408	630	303	412	70	19,6	0,15	-0,02
2025	7,55	73	502	73	428	410	641	306	420	70	19,59	0,17	-0,03
2030	7,02	73	502	73	441	413	625	310	422	70	19,56	0,15	-0,03
2035	6,4	73	504	73	447	419	628	314	427	72	19,56	0,18	-0,02
2040	5,91	73	504	74	451	425	631	319	432	70	19,57	0,12	-0,02
2045	5,4	74	499	74	453	434	630	323	436	70	19,56	0,18	-0,02
2050	4,81	74	500	74	455	444	640	327	442	70	19,53	0,16	-0,02
2055	4,42	74	482	74	457	455	610	331	440	70	19,51	0,17	-0,02
2060	4,09	74	466	74	457	462	576	334	436	71	19,52	0,16	-0,03
2065	3,91	74	451	75	455	463	541	336	429	71	19,53	0,12	-0,03

2070	16,73	74	467	75	450	457	518	345	425	72	19,52	0,16	-0,03
2075	15,92	75	507	75	442	446	577	342	432	72	19,5	0,2	-0,03
2080	15,11	75	526	75	439	440	614	338	437	72	19,5	0,19	-0,03
2085	14,25	75	540	76	440	438	637	332	441	72	19,5	0,13	-0,02
2090	13,43	75	546	76	445	441	659	327	447	72	19,49	0,13	-0,02
2095	12,62	75	551	76	450	447	672	322	453	72	19,48	0,13	-0,02
2100	11,81	75	551	76	457	454	680	319	458	73	19,47	0,13	-0,03
2105	11,11	75	551	76	465	461	686	316	463	73	19,47	0,15	-0,02
2110	10,34	75	550	77	473	469	686	314	467	73	19,46	0,13	-0,02
2115	9,67	76	544	77	481	478	682	313	471	73	19,46	0,15	-0,03
2120	9,02	76	540	77	488	486	680	313	474	73	19,45	0,16	-0,02
2125	8,43	76	536	77	494	495	676	314	478	73	19,43	0,14	-0,03
2130	7,81	76	525	77	500	503	664	315	479	73	19,43	0,16	-0,03
2135	7,41	76	505	77	504	511	637	317	477	73	19,42	0,12	-0,03
2140	7,02	76	485	78	505	516	604	319	471	73	19,43	0,12	-0,03
2145	6,71	76	470	78	503	516	577	320	464	74	19,43	0,16	-0,03
2150	6,42	76	459	78	499	511	557	321	457	73	19,44	0,17	-0,03
2155	6,12	76	453	78	494	505	547	323	452	73	19,43	0,18	-0,03
2160	5,82	76	443	78	490	501	531	325	447	73	19,43	0,2	-0,03
2165	8,61	76	472	78	484	492	564	327	450	74	19,43	0,17	-0,03
2170	8,11	76	480	78	475	483	605	327	453	74	19,44	0,16	-0,03
2175	7,61	76	474	78	469	480	611	325	451	73	19,45	0,13	-0,03
2180	7,22	76	470	79	463	480	603	323	447	72	19,43	0,13	-0,02
2185	6,78	76	465	79	457	482	594	322	444	73	19,45	0,16	-0,03
2190	6,41	75	468	79	452	486	595	320	444	73	19,45	0,12	-0,03
2195	6,11	75	454	79	448	492	561	319	437	73	19,44	0,17	-0,04
2200	5,9	75	437	79	445	492	525	318	429	74	19,45	0,14	-0,03
2205	5,81	75	427	79	441	486	487	316	418	74	19,45	0,15	-0,03
2210	5,71	75	417	79	434	476	462	314	407	73	19,45	0,18	-0,04
2215	16,92	75	422	79	427	464	442	313	397	73	19,47	0,14	-0,03
2220	16,04	75	516	79	418	451	547	311	412	73	19,45	0,18	-0,03
2225	15,13	75	555	79	414	444	612	309	421	72	19,46	0,13	-0,03
2230	14,22	75	576	79	414	444	652	307	430	72	19,47	0,17	-0,04
2235	13,41	75	532	79	418	449	675	305	438	72	19,48	0,13	-0,03
2240	12,91	75	443	79	423	453	633	303	432	72	19,48	0,15	-0,04
2245	12,53	75	415	79	425	449	602	302	426	73	19,46	0,17	-0,03
2250	12,02	75	402	79	424	442	592	301	422	72	19,48	0,19	-0,04
2255	11,62	75	393	79	423	434	595	299	421	73	19,49	0,18	-0,03
2260	11,09	74	381	79	423	429	574	298	415	72	19,46	0,15	-0,04
2265	10,82	74	371	79	423	423	567	296	412	72	19,48	0,17	-0,03
2270	10,42	74	365	79	422	417	568	295	410	72	19,5	0,12	-0,03
2275	10,02	74	357	79	422	413	566	293	407	72	19,5	0,2	-0,03
2280	9,72	74	349	79	423	410	551	292	403	72	19,5	0,16	-0,04
2285	9,41	74	338	79	423	407	534	290	398	71	19,49	0,16	-0,04
2290	9,23	74	329	79	421	404	525	289	394	72	19,52	0,16	-0,03
2295	8,92	74	321	79	419	402	514	288	390	72	19,5	0,13	-0,03
2300	8,71	74	316	79	416	400	506	287	386	72	19,53	0,18	-0,04
2305	8,41	73	311	79	412	398	501	286	384	72	19,54	0,16	-0,04
2310	8,23	73	310	78	409	398	500	286	382	72	19,53	0,12	-0,03
2315	8,01	73	313	78	405	400	489	285	379	71	19,53	0,16	-0,04
2320	7,82	73	311	78	400	403	492	285	378	71	19,54	0,2	-0,04
2325	7,61	73	307	78	396	407	490	285	377	71	19,56	0,11	-0,04

2330	7,4	73	305	78	393	408	488	284	376	71	19,53	0,12	-0,03
2335	7,31	73	297	78	390	407	468	284	370	71	19,54	0,12	-0,04
2340	7,22	73	289	78	387	404	428	283	360	72	19,54	0,16	-0,04
2345	7,11	73	279	78	383	399	405	282	352	71	19,54	0,17	-0,03
2350	7,02	72	271	78	378	394	387	281	345	71	19,56	0,18	-0,04
2355	6,91	72	263	78	373	387	374	280	339	70	19,55	0,18	-0,04
2360	6,92	72	257	78	368	381	362	278	333	70	19,58	0,19	-0,04
2365	6,81	72	251	78	362	375	351	277	328	70	19,56	0,13	-0,03
2370	6,7	72	246	78	357	368	344	276	323	70	19,59	0,19	-0,03
2375	6,71	72	241	77	353	362	336	274	318	70	19,59	0,14	-0,03
2380	6,6	72	237	77	348	357	331	273	314	70	19,59	0,16	-0,04
2385	6,6	71	233	77	343	351	324	272	309	70	19,61	0,11	-0,03
2390	6,51	71	230	77	339	346	318	270	305	70	19,62	0,13	-0,03
2395	6,39	71	227	77	335	341	312	269	301	70	19,62	0,14	-0,03
2400	6,42	71	223	77	331	336	307	267	297	70	19,6	0,13	-0,03
2405	6,31	71	220	77	327	331	302	265	294	70	19,6	0,13	-0,03
2410	6,32	71	217	77	323	326	298	264	290	70	19,63	0,12	-0,03
2415	6,23	71	215	77	319	322	294	262	287	70	19,62	0,19	-0,03
2420	6,21	71	213	76	315	317	290	260	283	69	19,63	0,18	-0,04
2425	6,11	71	210	76	311	313	286	259	280	70	19,64	0,18	-0,03
2430	6,01	71	208	76	308	309	283	257	277	69	19,65	0,21	-0,04
2435	6,01	70	207	76	304	306	279	256	274	69	19,65	0,18	-0,03
2440	5,91	70	205	76	300	302	277	254	271	69	19,64	0,16	-0,04
2445	5,91	70	204	76	297	299	274	253	269	69	19,65	0,16	-0,03
2450	5,82	70	202	76	294	295	271	251	266	69	19,65	0,14	-0,03
2455	5,82	70	201	76	291	292	268	250	264	69	19,66	0,12	-0,03
2460	5,71	70	199	76	288	290	264	248	261	69	19,66	0,16	-0,03
2465	5,71	70	198	76	285	287	262	247	259	69	19,65	0,19	-0,04
2470	5,61	70	197	75	282	284	260	246	257	69	19,68	0,11	-0,03
2475	5,61	70	196	75	280	282	257	245	254	68	19,67	0,12	-0,03
2480	5,51	70	194	75	277	279	254	243	252	69	19,67	0,14	-0,04
2485	5,51	70	192	75	274	277	252	242	250	68	19,67	0,15	-0,03
2490	5,51	70	191	75	271	275	249	241	248	68	19,64	0,18	-0,03
2495	5,43	70	189	75	268	272	247	240	245	69	19,68	0,14	-0,03
2500	5,4	69	188	75	265	270	245	239	243	68	19,66	0,18	-0,04
2505	5,31	69	187	75	263	267	244	238	242	69	19,66	0,11	-0,03
2510	5,31	69	185	75	260	265	242	237	240	68	19,67	0,13	-0,03
2515	5,26	69	184	75	258	263	240	235	238	68	19,68	0,15	-0,04
2520	5,25	69	184	74	256	261	238	235	236	68	19,67	0,19	-0,02
2525	5,12	69	182	74	254	258	237	234	234	68	19,69	0,12	-0,03
2530	5,11	69	181	74	252	257	235	233	233	68	19,67	0,19	-0,04
2535	5,11	69	180	74	250	254	232	232	231	68	19,69	0,15	-0,03
2540	5,01	69	178	74	248	252	230	231	229	68	19,67	0,15	-0,04
2545	4,99	69	177	74	246	250	229	230	228	68	19,67	0,17	-0,03
2550	4,91	69	176	74	244	248	227	230	226	68	19,69	0,12	-0,03
2555	4,91	69	175	74	243	246	226	229	225	68	19,7	0,14	-0,03
2560	4,91	69	175	74	241	245	225	228	224	68	19,68	0,18	-0,04
2565	4,79	69	174	74	240	243	224	228	223	68	19,68	0,15	-0,03
2570	4,8	69	173	74	238	241	223	227	222	68	19,68	0,14	-0,04
2575	4,71	69	172	74	237	240	222	226	221	68	19,7	0,14	-0,03
2580	4,71	69	171	74	235	239	222	226	220	68	19,69	0,12	-0,03
2585	4,61	69	171	74	234	237	221	225	219	68	19,69	0,11	-0,03

2590	4,61	69	170	73	232	236	220	225	218	68	19,69	0,15	-0,03
2595	4,61	69	169	73	231	235	219	225	217	68	19,69	0,2	-0,03
2600	4,51	69	168	73	229	234	217	224	216	68	19,69	0,15	-0,03
2605	4,5	68	167	73	228	232	216	224	215	67	19,69	0,18	-0,03
2610	4,52	68	166	73	227	231	215	224	214	68	19,69	0,17	-0,03
2615	4,41	68	165	73	225	230	214	223	213	67	19,71	0,16	-0,03
2620	4,44	68	164	73	224	229	213	223	212	67	19,69	0,15	-0,03
2625	4,32	68	163	73	223	228	212	222	211	67	19,69	0,16	-0,02
2630	4,3	68	162	73	221	227	212	222	210	67	19,69	0,16	-0,04
2635	4,32	68	162	73	220	226	212	221	209	68	19,69	0,16	-0,04
2640	4,21	68	161	73	219	225	212	221	209	67	19,66	0,18	-0,04
2645	4,25	68	160	73	218	224	211	221	208	67	19,68	0,15	-0,02
2650	4,21	68	160	73	217	223	210	221	207	67	19,68	0,17	-0,03
2655	4,14	68	159	73	215	223	209	221	206	67	19,69	0,18	-0,02
2660	4,09	68	158	73	214	222	208	221	205	67	19,68	0,19	-0,03
2665	4,12	68	157	73	213	221	206	220	204	67	19,68	0,16	-0,02
2670	4,01	68	156	73	212	219	204	220	203	67	19,69	0,16	-0,04
2675	4,01	68	155	73	210	218	203	220	202	67	19,69	0,14	-0,02
2680	4	68	154	73	209	217	202	220	201	67	19,69	0,12	-0,02
2685	3,87	68	153	72	208	216	201	219	200	67	19,68	0,17	-0,02
2690	3,91	68	152	72	206	215	200	219	199	67	19,7	0,12	-0,02
2695	3,91	68	151	72	205	214	199	218	198	67	19,66	0,17	-0,03
2700	3,81	68	149	72	204	212	197	218	197	67	19,71	0,14	-0,03
2705	3,81	68	148	72	202	211	194	218	196	67	19,69	0,18	-0,03
2710	3,82	68	146	72	200	210	192	218	195	67	19,71	0,13	-0,02
2715	3,81	68	144	72	199	209	190	218	194	67	19,7	0,14	-0,03
2720	3,7	68	142	72	197	207	188	218	192	67	19,69	0,2	-0,03
2725	3,71	68	140	72	196	206	186	218	191	67	19,69	0,16	-0,02
2730	3,71	68	138	72	194	204	184	218	190	67	19,68	0,14	-0,04
2735	3,71	68	136	72	192	203	182	217	189	67	19,69	0,11	-0,03
2740	3,6	68	134	72	191	201	180	217	188	67	19,67	0,15	-0,03
2745	3,62	68	132	72	189	200	179	217	186	67	19,69	0,17	-0,03
2750	3,61	68	130	72	188	198	177	217	185	67	19,67	0,13	-0,03
2755	3,61	68	128	72	186	197	175	217	184	67	19,68	0,17	-0,04
2760	3,52	68	127	72	185	195	173	216	183	67	19,7	0,18	-0,03
2765	3,48	68	126	72	183	193	172	216	181	67	19,68	0,2	-0,03
2770	3,51	68	124	72	182	192	170	216	180	67	19,69	0,15	-0,03
2775	3,52	68	123	72	181	190	168	216	179	67	19,68	0,15	-0,04
2780	3,51	68	122	72	179	188	167	216	178	67	19,68	0,12	-0,02
2785	3,4	68	121	72	178	186	165	216	177	67	19,68	0,17	-0,03
2790	3,41	67	120	72	177	185	163	216	176	67	19,7	0,15	-0,04
2795	3,4	67	119	72	175	183	162	215	175	67	19,69	0,15	-0,04
2800	3,4	67	118	72	174	182	161	215	174	67	19,68	0,1	-0,03
2805	3,41	67	117	72	173	180	160	215	173	67	19,67	0,16	-0,03
2810	3,31	67	116	72	172	179	159	215	172	67	19,7	0,17	-0,03
2815	3,31	67	115	72	171	177	158	215	171	67	19,68	0,18	-0,03
2820	3,34	67	115	71	170	176	157	214	170	67	19,69	0,16	-0,03
2825	3,31	67	114	71	169	175	156	214	169	67	19,7	0,14	-0,03
2830	3,3	67	113	71	168	173	155	214	169	67	19,71	0,12	-0,03
2835	3,2	67	113	71	168	172	154	214	168	67	19,69	0,11	-0,02
2840	3,21	67	112	71	167	171	153	213	167	67	19,68	0,16	-0,04
2845	3,21	67	111	71	166	170	152	213	166	67	19,69	0,15	-0,04

2850	3,21	67	111	71	165	169	152	213	166	67	19,67	0,17	-0,04
2855	3,21	67	110	71	164	168	151	213	165	66	19,68	0,16	-0,03
2860	3,11	67	110	71	163	167	150	212	164	67	19,67	0,17	-0,03
2865	3,11	67	109	71	162	166	149	212	164	67	19,68	0,18	-0,03
2870	3,09	67	109	71	162	165	148	212	163	66	19,66	0,16	-0,03
2875	3,1	67	108	71	161	164	148	212	162	66	19,66	0,16	-0,03
2880	3,1	67	108	71	160	163	147	212	162	66	19,7	0,16	-0,03
2885	3,01	67	107	71	159	162	147	212	161	66	19,69	0,17	-0,03
2890	3,01	67	107	71	159	162	146	211	161	66	19,69	0,16	-0,03
2895	3,02	67	107	71	158	161	146	211	161	66	19,68	0,12	-0,02
2900	3,01	67	106	71	158	160	146	211	160	66	19,68	0,16	-0,03
2905	3	67	106	71	157	160	146	211	160	66	19,7	0,1	-0,03
2910	2,91	67	106	71	157	159	146	211	160	66	19,66	0,16	-0,03
2915	2,9	67	105	71	157	159	145	211	159	66	19,69	0,13	-0,02
2920	2,92	67	105	71	157	158	145	211	159	66	19,65	0,14	-0,03
2925	2,9	67	105	71	157	157	145	211	159	67	19,68	0,1	-0,03
2930	2,91	67	105	71	157	157	144	210	159	67	19,66	0,13	-0,02
2935	2,81	67	105	71	157	156	144	210	159	67	19,69	0,16	-0,02
2940	2,81	67	104	71	157	156	144	210	158	67	19,65	0,18	-0,03
2945	2,76	67	104	71	157	156	144	210	158	66	19,67	0,19	-0,03
2950	2,82	67	104	71	157	155	144	210	158	67	19,66	0,15	-0,03
2955	2,81	67	104	71	157	155	143	210	158	67	19,68	0,15	-0,02
2960	2,71	67	104	71	157	155	143	210	158	67	19,68	0,15	-0,04
2965	2,71	67	104	71	156	154	143	210	158	67	19,67	0,18	-0,03
2970	2,7	67	104	71	156	154	143	210	158	67	19,67	0,16	-0,02
2975	2,7	67	103	71	156	153	143	210	158	66	19,68	0,14	-0,03
2980	2,71	68	103	71	156	153	142	210	157	67	19,68	0,11	-0,02
2985	2,61	68	103	71	156	153	142	209	157	66	19,69	0,12	-0,02
2990	2,6	68	103	71	156	152	142	209	157	66	19,69	0,11	-0,03
2995	2,61	68	103	71	156	152	142	209	157	67	19,67	0,18	-0,02
3000	2,61	68	103	71	156	152	142	209	157	66	19,65	0,11	-0,02
3005	2,65	68	103	71	156	151	141	209	157	66	19,68	0,16	-0,03
3010	2,51	68	103	71	156	151	141	209	157	66	19,65	0,16	-0,03
3015	2,51	68	102	71	156	151	141	209	156	66	19,67	0,14	-0,02
3020	2,5	68	102	71	156	150	141	209	156	66	19,65	0,17	-0,03
3025	2,51	68	102	71	155	150	140	209	156	66	19,66	0,09	-0,02
3030	2,51	68	102	71	155	150	140	208	156	67	19,66	0,14	-0,04
3035	2,5	68	102	71	155	149	140	208	155	66	19,66	0,16	-0,03
3040	2,4	68	102	71	154	149	140	208	155	66	19,65	0,18	-0,03
3045	2,4	68	102	71	154	149	139	208	155	67	19,66	0,15	-0,04
3050	2,41	68	101	71	154	148	139	208	155	67	19,64	0,17	-0,03
3055	2,4	68	101	71	154	148	139	208	155	67	19,63	0,17	-0,02
3060	2,4	68	101	71	153	148	139	208	154	67	19,64	0,15	-0,02
3065	2,31	68	101	71	153	148	139	208	154	67	19,65	0,17	-0,02
3070	2,3	68	101	71	153	148	139	208	154	67	19,65	0,13	-0,02
3075	2,31	68	101	71	153	147	139	208	154	67	19,66	0,16	-0,03
3080	2,31	68	101	71	153	147	139	208	154	67	19,64	0,19	-0,03
3085	2,31	68	101	71	153	147	139	208	154	67	19,66	0,18	-0,03
3090	2,17	68	101	71	153	147	139	208	154	67	19,65	0,12	-0,02
3095	2,21	68	101	71	153	147	140	208	154	67	19,66	0,17	-0,03
3100	2,18	68	101	71	153	147	140	208	154	67	19,63	0,13	-0,02
3105	2,2	68	101	71	153	147	140	208	155	67	19,66	0,14	-0,03

3110	2,23	68	101	71	153	147	141	208	155	67	19,64	0,14	-0,02
3115	2,11	68	101	71	153	147	141	208	155	67	19,64	0,18	-0,02
3120	2,12	68	102	71	153	147	141	208	155	67	19,64	0,17	-0,02
3125	2,09	68	102	71	153	147	141	208	155	67	19,64	0,17	-0,02
3130	2,1	68	102	71	153	147	141	208	155	67	19,64	0,16	-0,03
3135	2,1	68	102	71	153	147	141	208	155	67	19,64	0,17	-0,03
3140	2,11	68	102	71	153	147	141	208	155	67	19,62	0,18	-0,02
3145	2,01	68	102	71	153	147	141	207	155	67	19,65	0,19	-0,03
3150	2,01	68	102	71	153	146	140	207	155	67	19,66	0,16	-0,04
3155	2	68	102	71	152	146	140	207	155	67	19,64	0,15	-0,04
3160	2,01	68	102	71	152	146	140	207	154	67	19,66	0,16	-0,03
3165	2	68	102	71	152	146	139	207	154	67	19,64	0,14	-0,03
3170	2	68	102	71	151	146	139	207	154	67	19,65	0,14	-0,03
3175	1,91	68	102	71	151	146	139	207	154	67	19,66	0,12	-0,03
3180	1,9	68	101	71	150	146	138	207	153	67	19,65	0,12	-0,02
3185	1,91	68	101	71	150	145	137	206	153	67	19,66	0,11	-0,02
3190	1,89	68	101	71	150	145	137	206	153	67	19,66	0,15	-0,02
3195	1,91	68	101	71	149	145	137	206	152	67	19,66	0,18	-0,02
3200	1,9	68	101	71	149	145	136	206	152	67	19,65	0,18	-0,03
3205	1,83	68	100	71	149	144	136	205	152	67	19,64	0,17	-0,03
3210	1,8	68	100	71	148	144	136	205	151	67	19,64	0,17	-0,02
3215	1,8	69	100	71	148	144	136	204	152	67	19,64	0,15	-0,03
3220	1,8	68	101	71	148	143	139	204	154	67	19,63	0,15	-0,03
3225	1,81	68	101	71	148	143	137	204	152	67	19,64	0,13	-0,02
3230	1,8	68	100	71	147	143	136	203	151	67	19,66	0,18	-0,03
3235	1,8	68	100	71	147	142	135	203	150	67	19,64	0,15	-0,02
3240	1,71	69	100	71	147	142	134	202	150	67	19,65	0,17	-0,04
3245	1,69	69	100	71	146	141	134	202	149	67	19,64	0,16	-0,04
3250	1,7	69	100	71	146	141	136	202	151	67	19,66	0,18	-0,03
3255	1,7	69	100	71	146	140	136	201	150	67	19,63	0,13	-0,02
3260	1,7	69	100	71	145	140	134	201	149	67	19,66	0,18	-0,03
3265	1,71	69	99	71	145	139	133	201	148	67	19,65	0,18	-0,03
3270	1,7	69	99	71	145	139	133	200	149	67	19,66	0,11	-0,02
3275	1,7	69	99	71	144	138	135	200	151	67	19,65	0,19	-0,03
3280	1,59	69	99	72	144	138	133	200	148	67	19,67	0,12	-0,02
3285	1,6	69	98	72	143	138	132	200	147	67	19,64	0,18	-0,02
3290	1,62	69	98	72	143	137	133	199	148	68	19,64	0,17	-0,02
3295	1,61	69	99	72	143	137	134	199	150	67	19,65	0,13	-0,02
3300	1,6	69	98	72	142	136	132	199	147	67	19,63	0,15	-0,03

APPENDIX 5: Participants

Danick Power ing.
v-p operation
Services Polytests inc.
450.741.3636
www.polytests.com

Maxime Martin
Technicien
Services Polytests inc.
450.741.3636
www.polytests.com

APPENDIX 6: Drawings and specifications

APPENDIX 7: Operator's manual

hearthstone

Craftsbury

(Model 8392)

Woodstove

OWNER'S MANUAL

Installation And Operating Instructions

We recommend that our products be installed and serviced by professionals who are certified in the U.S. by NFI (National Fireplace Institute), or by W.E.T.T. (Wood Energy Technology Transfer) in Canada.
www.nficertified.org
www.wettinc.ca

PFS Report F17-183

SAVE THIS OWNER'S MANUAL FOR FUTURE REFERENCE

PLEASE READ THIS ENTIRE OWNER'S MANUAL BEFORE YOU INSTALL AND USE YOUR NEW CRAFTSBURY WOOD STOVE.

If this room heater is not properly installed, a house fire may result.
To reduce the risk of fire, follow the installation instructions.
Failure to follow these instructions can result in property damage, bodily injury, or even death.
Conforms to UL Std. 1482-2011 (R2015)
Certified to ULC Std. S6270-00 (R2016)

CONTACT LOCAL AUTHORITIES WITH JURISDICTION (BUILDING DEPARTMENT or FIRE OFFICIALS), ABOUT PERMITS REQUIRED, RESTRICTIONS AND INSTALLATION INSPECTION IN YOUR AREA.

California Prop 65

WARNING: This product can expose you to chemicals including glass wool fiber and carbon monoxide which are known to the State of California to cause cancer, birth defects or other reproductive harm. For more information go to www.P65Warnings.ca.gov

Craftsbury (Model 8392)
Manual: 6400-41416
R: 08/11//2020

Notes on Stove Operation and Efficiency

Rating:

You have purchased a Hearthstone Craftsbury tested to EPA Method 28R 40 CFR Part 60 where applicable. This stove is certified to comply with the U.S. Environmental Protection Agency 2020 particulate emissions standard using crib wood. It is certified at 1.07 gr/hr. emission rate and under specific test conditions has been shown to deliver heat at rates ranging from 13,900 to 31,600 Btu (output).

This wood heater has a manufacturer-set minimum allowable low burn rate that must not be altered. It is against federal regulations to alter this setting or otherwise operate this wood heater in a manner inconsistent with operating instructions in this manual.

Please refer to the Warranty section of this manual for registration instructions. In case of warranty claims, please contact the point of original sale or the nearest authorized Hearthstone dealer. Our dealer network processes all warranty claims. Authorized Hearthstone dealers can be located at www.hearthstonestoves.com.

This heater is designed to burn natural wood only. Higher efficiencies and lower emissions generally result when burning air-dried seasoned hardwoods, as compared to softwoods or to green or freshly cut hardwoods. **DO NOT BURN:** *Garbage, lawn clippings, material containing rubber (including tires), materials containing plastic, waste petroleum products paints or paint thinners, asphalt products, materials containing asbestos, construction or demolition debris, railroad ties, pressure treated wood, manure or animal remains, salt water driftwood or other previously salt water saturated materials, unseasoned wood, paper products, cardboard, plywood or particleboard.* This prohibition against burning these materials does not prohibit the use of fire starters made from paper, cardboard, sawdust, wax and similar substances for the purpose of starting a fire in an affected wood heater. Burning these materials may result in a release toxic fumes or render the heater ineffective and cause smoke.

Following the maintenance guidelines set forth in this manual will help ensure the efficient use of your wood heater and minimize visible emissions. Having your stove inspected by a trained professional on a regular basis will greatly increase the potential for recognizing potential impacts to efficiency.

Proper draft is important to the efficient operation of your heater. Refer to the Normal Operation section of this manual for information regarding adequate draft. Both excessive and sub-minimum draft can affect the efficiency of your wood heater. Excessive draft can lead to over-consumption of fuel, lower overall heating capacity of the stove and potential over firing. Low draft can result in inefficient burns, low heat output, expulsion of smoke into the living area when stove doors are opened and an increased potential for build-up of flammable materials in the flue.

Efficiency:

Efficiency was measured and weighted using EPA Method 28R and CSA B415-10 methodology. A weighted average was used to calculate the overall efficiency across all of the 4 burn rate categories using the higher heating value (HHV). The weighted average efficiency is 79% (HHV).

To maximize the efficiency of your wood stove, make sure it is sized properly for the space you plan to heat. An oversized stove will often be forced to burn at a lower and dirtier burn rate. Consult with your dealer for sizing and correctly placing the stove in your home. An incorrectly placed stove can greatly reduce efficiency. Maximizing the efficiency of your stove will heat your house quickly, burn cleaner and use less wood.

Refer to the Choosing Firewood section of this manual for appropriate fuel selection. Seasoned firewood is typically at or near 20% moisture content. This can be measured with any number of hand-held moisture meters available through your local hearth shop. Follow instructions included in the meter you purchase to measure fuel wood moisture content. Burn only dry, seasoned wood as using wet wood will greatly reduce your efficiency.

CO Emissions:

The Craftsbury has the following CO emission rates by burn level: Category 1 (low) –40.7 g/hr., Category 2 (med. low) – 16.3 g/hr., Category 3 (med. high) – 8.6 g/hr. and Category 4 – 60.1 g/hr. Wet wood or unapproved fuel described above can greatly affect the emissions of a wood burning stove.

Smoke/Fire/CO Detectors:

It is highly recommended that smoke and CO detectors be installed throughout the heated space when a wood burning heater is installed. Be certain to install these devices not only in the area where the wood appliance is located, but also in bedrooms, hallways leading to other areas of the house and all common areas of the heated space. Check the batteries in these devices and assure operation by performing whatever test operations are recommended by the manufacturer.

TABLE OF CONTENTS

INTRODUCTION 4

CODES 5
SAFETY INFORMATION 5
PERIODIC CHECKLIST 6
EMERGENCY PROCEDURES 6

SPECIFICATIONS 7

INSTALLATION 8

UNPACKING 8
PACK LIST 8
INSTALLING YOUR STOVE 8
HEARTH REQUIREMENTS & FLOOR PROTECTION 9
COMBUSTIBLE SURFACE REQUIRED CLEARANCES 10
CHIMNEY CONNECTOR SYSTEMS AND CLEARANCES 12
OUTSIDE AIR SUPPLY 13
VENTING COMPONENTS & CONFIGURATION REQUIREMENTS 14
INSTALLING IN A MOBILE HOME 19

OPERATION 21

CONTROLS AND FEATURES 21
CHOOSING FIREWOOD 22
BUILDING A FIRE 23
NORMAL OPERATION 24

MAINTENANCE 27

CATALYTIC COMBUSTOR INSPECTION AND REPLACEMENT PROCEDURES 27
INSPECTING THE CATALYSTS AND REMOVING/REPLACING THE BAFFLE 27
REMOVING OR REPLACING THE CATALYSTS 28
REPLACING THE REFRACTORY STONE AND SECONDARY RISER ASSEMBLY 30
GLASS REPLACEMENT PROCEDURES 30
CREOSOTE FORMATION & REMOVAL 31
GASKETS 31
GLASS 31

TROUBLESHOOTING 32

COMMON ISSUES 32
TROUBLESHOOTING GUIDE 33
CATALYST TROUBLESHOOTING GUIDE 34
REPLACEMENT PARTS & OPTIONAL ACCESSORIES 35

SAFETY LABEL 36

LIMITED WARRANTY 37

INTRODUCTION

Thank you for purchasing a Craftsbury woodstove from Hearthstone Quality Home Heating Products. This stove will provide years of comfortable heat. This stove combines the warmth and comfort of soapstone and cast iron with the efficiency of advanced catalytic technology. The Craftsbury blends modern technology with the unique beauty and qualities of cast iron. We trust that you will appreciate the quality of this handcrafted product.

Your Craftsbury woodstove burns very efficiently, and produces a large amount of heat. However, you should not consider your Craftsbury the primary heat source for your home. The Craftsbury's large glass window allows you to enjoy the fire from a variety of locations in the room.

Please read this manual in its entirety. Its purpose is to familiarize you with your stove's safe installation, proper break-in, operation and maintenance. It contains extremely important information so keep it handy and refer to it often.

A qualified heating technician may need this owner's manual as a reference when installing this stove in your home. There are national, state, and local building codes that direct the technician on how to install your stove. These codes stipulate the dimension of stovepipe and clearances to walls, ceilings, hearth, and other combustible surfaces. The codes exist to reduce the risk of fire. Failure to follow these instructions can result in fire, property damage, bodily injury, and even death.

Install the stove in a safe, open area, away from traffic flow, doors, and hallways. If possible, try to install the stove near an existing chimney and chimney connector. It is extremely important to install this stove with the proper clearance from combustible surfaces. You can purchase specific connector pipe and special wall coverings as specified by this manual and the NFPA 211 code to protect combustible surfaces. As a general rule, keep furniture, drapes, curtains, wood, paper, and other combustibles at least 36 inches (92 cm) away from the stove. Never install the stove in or near a storage location for gasoline, kerosene, charcoal lighter fluid or any other flammable liquids.

Install the stove in your central living area to allow heat to radiate naturally to distant rooms. Do not install your stove in a poorly insulated area. This is inefficient and would likely result in higher fuel usage.

- **SAFETY NOTICE:**

  AN IMPROPERLY INSTALLED STOVE CAN RESULT IN A HOUSE FIRE. FOR YOUR SAFETY, CAREFULLY FOLLOW THE INSTALLATION DIRECTIONS. CONTACT LOCAL BUILDING OR FIRE OFFICIALS ABOUT RESTRICTIONS AND INSTALLATION INSPECTION IN YOUR AREA.

The safety of your stove will depend on many factors, some of which include: distance to combustible objects, correct venting, and adequate chimney maintenance. Should you have any questions, do not hesitate to contact your dealer for additional information.

Contact your dealer for any necessary warranty service.

This Craftsbury Model 8392 stove is warranted by:

Hearthstone ***Quality Home Heating Products, Inc***®
317 Stafford Ave.
Morrisville, Vermont 05661, USA
www.Hearthstonestoves.com

CODES

When you install your Craftsbury woodstove, it is imperative that you adhere to all Federal and local codes. Obtain these codes from either of the following sources:

American National Standards Institute, Inc. (ANSI)
1430 Broadway
New York, NY 10018
www.ansi.org

National Fire Protection Association, Inc. (NFPA)
Battery March Park
Quincy, MA 02269
www.nfpa.org

If you are installing your Craftsbury in a mobile or manufactured home, follow the guidelines described in the Manufactured Home Construction and Safety Standard, Title 24 CFR, Part 3280 (United States).

SAFETY INFORMATION

Read and understand this Owner's Manual thoroughly before installing and using this stove.

Make sure to install your stove:

- According to the manufacturer's recommendations
- In accordance with all applicable codes
- With the proper sized chimney

When using your stove, follow these safety precautions:

- **Never** modify this stove in any way.
- **Never** burn kiln dried, painted or treated wood in this stove.
- **DO NOT BURN GARBAGE. Never** burn garbage or trash, colored or glossy paper, solvents, plywood, artificial logs, cardboard, or driftwood, in this stove.
- **Never** burn coal in this stove.
- **DO NOT BURN FLAMMABLE FLUIDS.**
- **DO NOT USE CHEMICALS OR FLUIDS TO START THE FIRE. Never** use gasoline, kerosene, charcoal lighter fluid, or other flammable fluids to start or invigorate the fire. These fuels will cause dangerous burning conditions in the stove. Keep all such materials away from the stove.
- **Never** use a wood grate or other device to elevate the fire.
- **Never** allow logs in the firebox to hit the glass when the door is closed.
- **Never** slam the door or use the door to force wood in to the stove.
- **Never** over-fire your stove. (See page 26)
- **Never** put articles of clothing or candles on a hot stove.
- **Never** connect the stove to a flue used by another appliance.
- **Never** connect to or use in conjunction with any air distribution ductwork unless specifically approved for such installations

Other safety guidelines:

- Keep all combustible items such as furniture, drapes, clothing, and other items, at least 36" (0.92 m) from the stove (See page 9)
- Install a smoke detector, preferably in an area away from your wood stove.
- Keep a fire extinguisher handy. We recommend the type rated "A B C."
- Dispose of ashes properly. (See page 23)
- Keep children and pets away from the stove when it is burning; they could be seriously injured by touching a hot stove.
- Clean your chimney system as needed. (See page 31)
- Outside combustion air may be required if:
  1. This solid-fuel-fired appliance does not draw steadily, smoke rollout occurs, fuel burns poorly, or back-drafts occur whether or not there is combustion present.
  2. Existing fuel-fired equipment in the house, such as fireplaces or other heating appliances, smell, do not operate properly, suffer smoke roll-out when opened, or back-draft whether or not there is combustion present.
  3. Opening a window slightly on a calm (windless) day alleviates any of the above symptoms.
  4. The house is equipped with a well-sealed vapor barrier and tight-fitting windows and/or has any powered devices that exhaust house air.

5. There is excessive condensation on windows in the winter.
6. A ventilation system is installed in the house.

If these or other indications suggest that infiltration air is inadequate, additional combustion air should be provided from the outdoors. Outside combustion air can be provided to the appliance by using the optional outside air kit #96-53400

PERIODIC CHECKLIST

Perform each of these tasks at the specified intervals.

At the End of Every Week:

- Empty ashes from the firebox, sooner if the firebox is full.

At the Beginning of Every Other Month:

- Depending upon your use of the stove, visually inspect the chimney connector and chimney for creosote. (see page 31)
- Check door seals using the "dollar bill test." - When the stove is cool, shut the door on a dollar bill. If the bill pulls out without any resistance, then your stove's door is not sealing properly. To tighten the seal, adjust the door latch mechanism or change the door gasket. (Refer to page 31.)
- Inspect the face of the catalytic combustor for fly ash and soot. Use a soft-bristled brush to remove if present. It is recommended to visually inspect the catalytic combustor at least 3 times during the heating season, or every 2-3 months.

At the End of Every Season:

- Dismantle the chimney connector and clean it thoroughly. Replace any pieces that show signs of rust or deterioration.
- Inspect and, if necessary, clean your chimney.
- Clean out the inside of the stove thoroughly.
- Check and clean the catalytic combustor, if necessary
- Inspect all door gasket material and replace if worn, frayed, cracked or extremely hard.

EMERGENCY PROCEDURES

If you have a stovepipe or chimney fire, follow these instructions:

1. If the fire is too threatening, leave the area and call the fire department immediately! If not, perform the next three steps.
2. Close the primary air control.
3. Close the stovepipe damper (if present).
4. Close the bypass damper
5. Keep the stove front door closed!

- **WARNING: DO NOT ATTEMPT TO PUT OUT A STOVEPIPE OR CHIMNEY FIRE BY THROWING WATER ONTO THE STOVE, STOVEPIPE, OR CHIMNEY. THE EXTREMELY HIGH TEMPERATURE OF SUCH FIRES CAN CAUSE INSTANTANEOUS STEAM AND SERIOUS BODILY HARM.**

Once the chimney fire expires, leave the primary air control and bypass handle closed and let the fire in the stove die out completely. Inspect the stove, stovepipe, and chimney thoroughly for any sign of damage before firing the stove again. You must correct any damage before using your stove again.

Establish a routine for the fuel, wood burner and firing technique. Check daily for creosote build-up until experience shows how often you need to clean to be safe. Be aware that the hotter the fire the less creosote is deposited, and weekly cleaning may be necessary in mild weather even though monthly cleaning may be enough in the coldest months. Contact your local municipal or provincial fire authority for information on how to handle a chimney fire. Have a clearly understood plan to handle a chimney fire.

SPECIFICATIONS

Maximum Heat Output:
40,000 BTUs per hour of cordwood (based on independent laboratory test results).

Floor Size of Heated Area:
Up to a maximum of 1,400 square feet. Factors unique to your home can reduce the square footage the stove will heat. Home insulation value, number and efficiency of windows, floor plan, stove placement, quality of the fuel and other conditions may limit the heating ability of the stove.

Firebox Capacity:
1.32 cubic feet.

Maximum Log Length: Up To 16” (40.6cm).

Emissions: 1.07 g/hr.

Burn Time: Up to 16+ hrs. (*Heat Life*™: Up to 20 hours) Note: The amount and weight of wood contained per cubic foot of firebox volume can vary from 10 to 25 lbs. per cubic foot depending on type of wood, moisture content, packing density and other factors.

Stove Dimensions:

Height: 30 1/2” (77.2cm)
Width: 23 3/4" (59.1cm)
Depth: 19 3/8" (49.2cm)
Weight: 350 lbs. (159 kg)

Connector Size: 6" (152 mm) diameter
Metal Chimney: 6" (152 mm) inside diameter
Masonry Chimney: 6” (152 mm) inside diameter (round flue), 8” x 8” (203 x 203 mm) (square flue)

Crate Dimensions: H-40” W-29” L-36” or 102x74x 92cm

Optional Equipment:

Outside Air Kit	96-53400
Blower Kit	96-57400

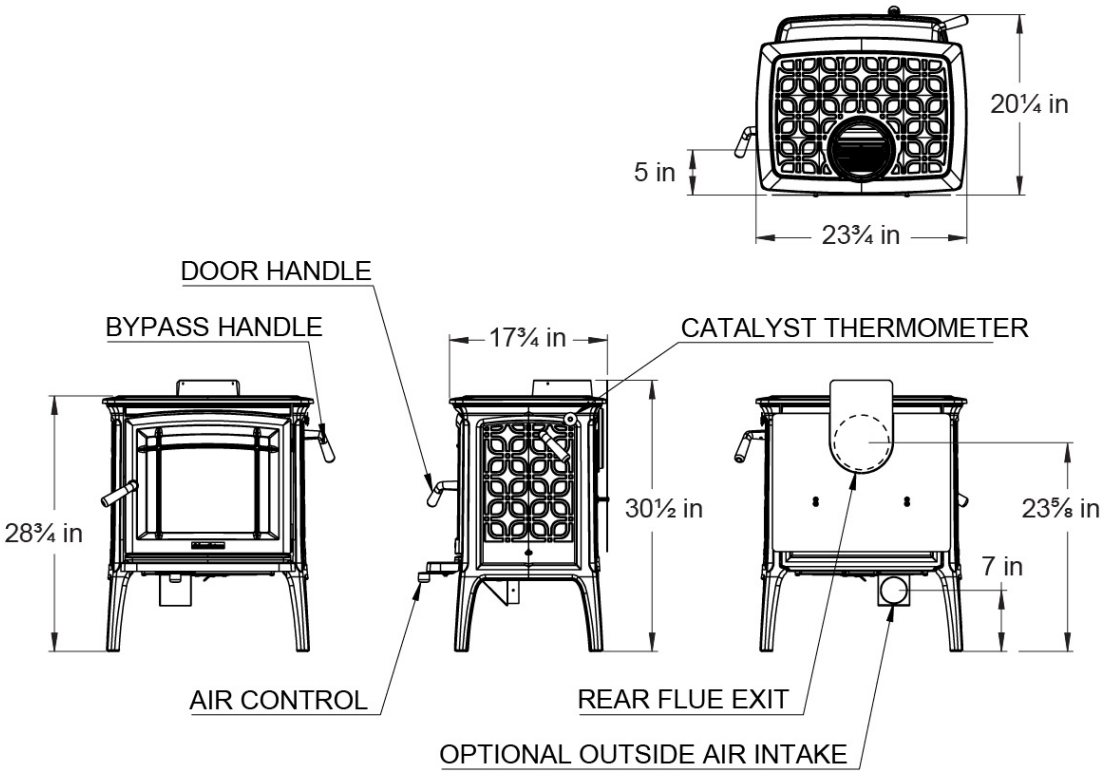

Figure 1 – Craftsbury Dimensions

INSTALLATION

UNPACKING

Hearthstone packages your Craftsbury woodstove with the greatest care so that it ships safely. Under certain circumstances, however, damage may occur during transit and handling. When you receive the Craftsbury, carefully unpack and inspect the stove and all accompanying parts. Ensure that all parts are included inside the stove. If any parts are damaged or missing, please contact your authorized Hearthstone dealer immediately.

Be sure to remove the packaging material in the flue collar and above the baffle before installing the chimney.

PACK LIST

Craftsbury Model 8392 Woodstove
Owner's Manual

The label is attached by a cable to the bottom of the stove. Take care when lifting the stove not to damage the label or cable. After final positioning of the stove, the label may be stored in the holding clip on the bottom shield of the stove.

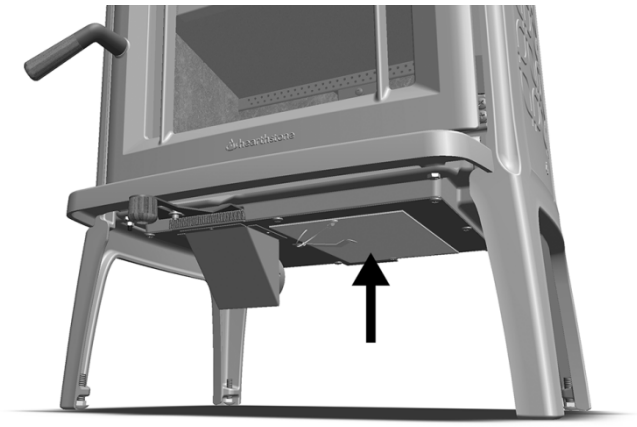

Figure 2 - Label Location

INSTALLING YOUR STOVE

Choose a place to install your Craftsbury woodstove. Consider the location of your stove for optimum heating efficiency. In general, it is better to place your stove in a main living area, rather than in a basement or other confined space.

Inspect this location to make sure that the stove and stovepipes will have the required clearance from combustible materials that are near the stove. Combustibles include walls, floor, ceiling, and chimney chase. You must carefully consider the clearances to all of these combustibles before actually connecting your stove.

If the floor is made of combustible material, then a non-combustible floor protector is required between the floor and the stove. An example of a non-combustible floor protector is a hearth constructed with a continuous layer of tile, brick, slate, glass or another non-combustible facing. There is no R-value requirement.

If you use a rear connector pipe, ensure it is listed with Underwriter's Laboratories. Check the listing of <u>your</u> pipe with UL for the correct clearances.

The diagrams in this manual represent typical installations, but are specific to the Simpson Dura-Vent DVL brand.

Clearances to NFPA Code 211 Protected Surfaces

You can reduce the clearances to combustible surfaces by using any National Fire Protection Agency (NFPA) approved wall protection system with additional approval of the regulatory authority having jurisdiction in your area. Please refer to NFPA Code 211 for specifications and complete details. You can obtain this information directly from the NFPA.

National Fire Protection Agency
Batterymarch Park
Quincy, MA 02269
1-800-344-3555
1-617-770-3000
www.nfpa.org

HEARTH REQUIREMENTS & FLOOR PROTECTION

Ensure you protect combustible flooring with a covering of noncombustible material. The Craftsbury does not require an insulated hearth pad. The minimum floor protection must be met under the stove and extend beyond the stove as follows:

The minimum floor protection for US installations is 33in x 31-1/2in.
The minimum floor protection for installations in Canada is 43in x 40in.

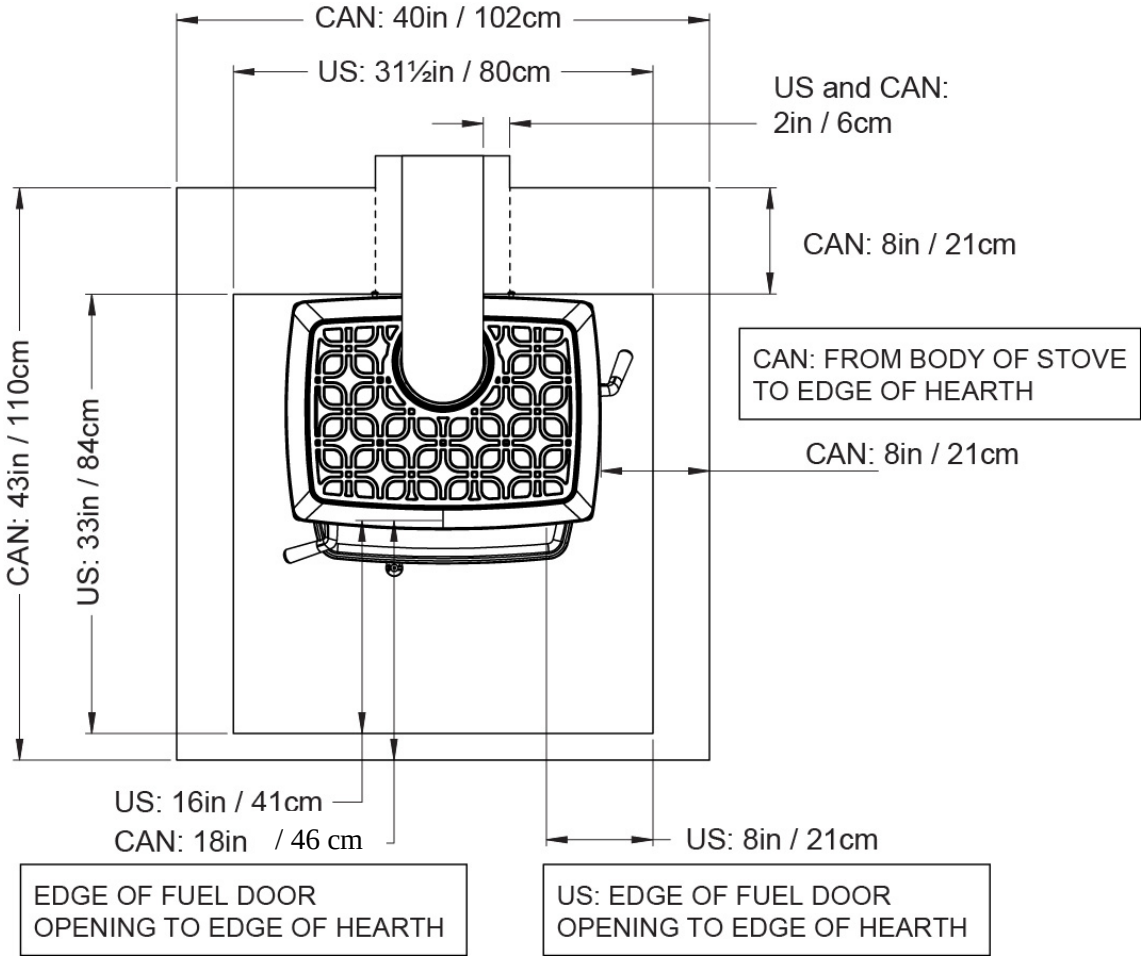

Figure 3 – Hearth Dimensions

COMBUSTIBLE SURFACE REQUIRED CLEARANCES

Note: *Dimensions shown in the following figures are from the body of the stove unless otherwise indicated.*

It is very important to follow minimum clearances for chimney connectors to combustibles such as walls and ceilings when installing the stove near combustible surfaces.

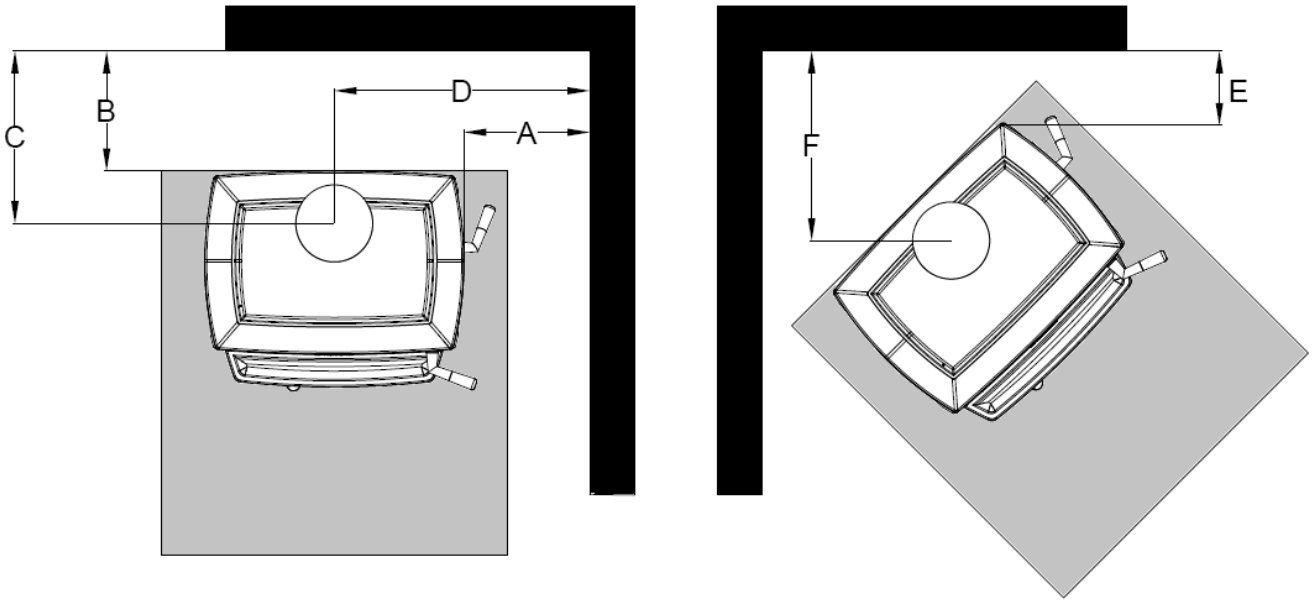

Figure 4 – Clearance to Combustibles

	Parallel				Corner	Corner
Clearances	A	B	C	D	E	F
Single wall Connector – Inc. Rear Heat Shield	14”-36cm	13.75”-35cm	18”-46cm	25.5”-65cm	7”-18cm	17.25”-44cm
Single Wall Connector – With Blower Kit Shield	14”-36cm	13.75”-35cm	18”-46cm	25.5”-65cm	7”-18cm	17.25”-44cm
Double Wall Connector – Inc. Rear Heat Shield	14”-36cm	9.75”-25cm	14”-36cm	25.5”-65cm	7”-18cm	17.25”-44cm
Double Wall Connector – With Blower Kit Shield	14”-36cm	9.75”-25cm	14”-36cm	25.5”-65cm	7”-18cm	17.25”-44cm
Single Wall Connector – No Rear Heat Shield	14”-36cm	15.5”-40cm	21”-54cm	25.5”-65cm	14”-36cm	25.5”-65cm
Alcove W/Single Wall Conn – Inc. Rear Heat Shield	14”-36cm	13.75”-35cm	18”-46cm	25.5”-65cm	See NFPA-211	
Alcove W/Single Wall Conn – With Blower Kit Shield	14”-36cm	13.75”-35cm	18”-46cm	25.5”-65cm	See NFPA-211	
Alcove W/Dbl Wall Conn – Inc. Rear Heat Shield	14”-36cm	9.75”-25cm	14”-36cm	25.5”-65cm	See NFPA-211	
Alcove W/Dbl Wall Conn – With Blower Kit Shield	14”-36cm	9.75”-25cm	14”-36cm	25.5”-65cm	See NFPA-211	

Alcove Clearances (inches)	Unprotected Surfaces	Protected Surfaces (NFPA-211)
Minimum alcove width	51.75” – 132cm	See NFPA-211
Min. Alcove ceiling from floor with single wall connector	56” – 142.3cm	See NFPA-211
Min. Alcove ceiling from floor with double wall connector	56” – 142.3cm	See NFPA-211

FOR BLOWER KIT, USE KIT #96-57400

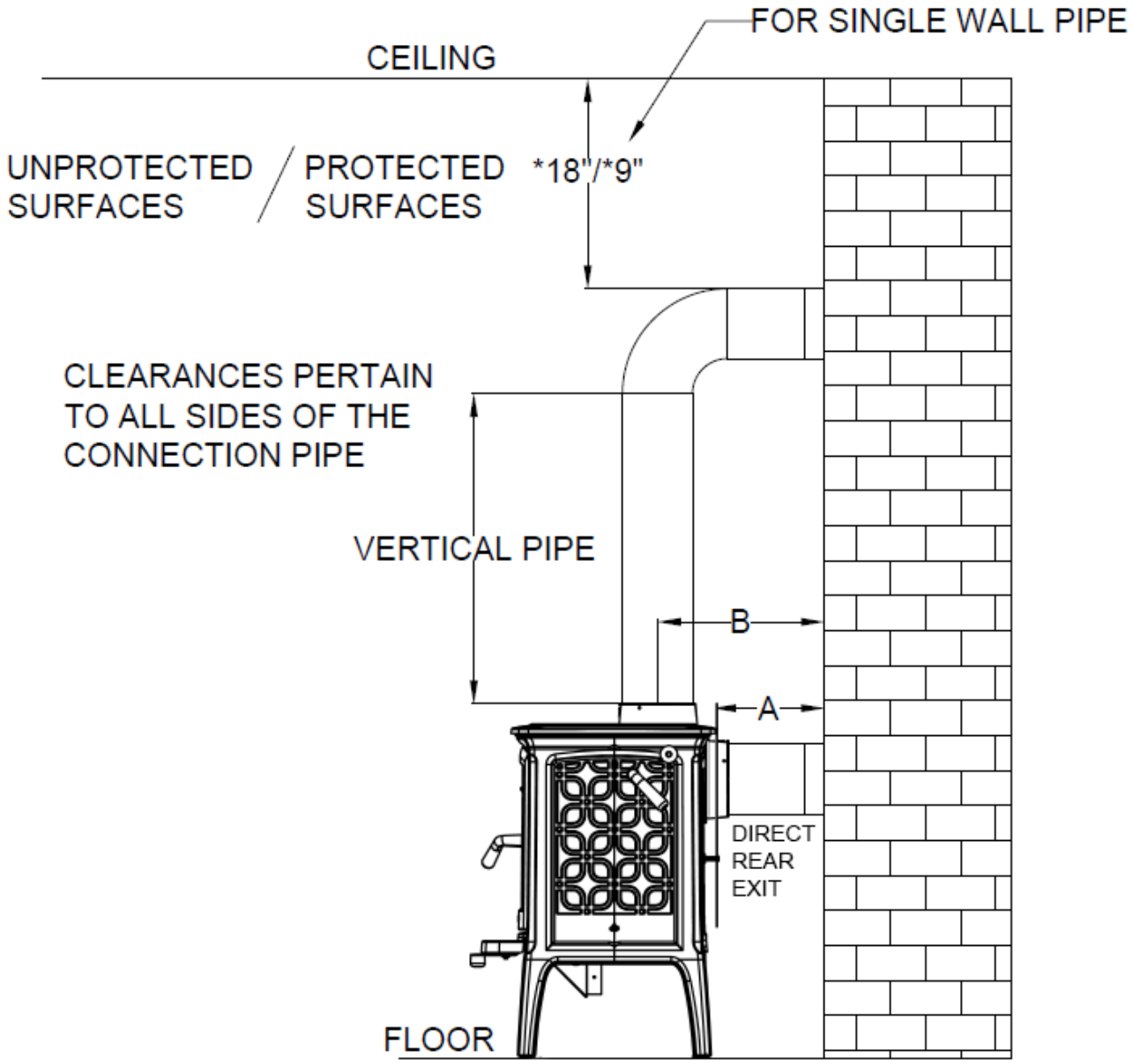

Figure 5 Chimney Connector Clearances

	Single Wall Pipe			Double Wall Pipe	
Through the wall top flue exit or direct rear exit	**With Blower Kit Shield****	**Inc. Rear Heat Shield**	**No Rear Heat Shield**	**With Blower Kit Shield****	**Inc. Rear Heat Shield**
A	13.75”-35cm	13.75”-35cm	15.5” – 40cm	9.75”-25cm	9.75”-25cm
B	18”-46cm	18”-46cm	21” – 54cm	14”-36cm	14”-36cm

***For double wall pipe clearance to ceiling, refer to pipe manufacturer specifications.**

**** FOR BLOWER KIT, USE KIT #96-57400**

See Parallel Clearance to Combustibles for clearances to the sides of the stove.

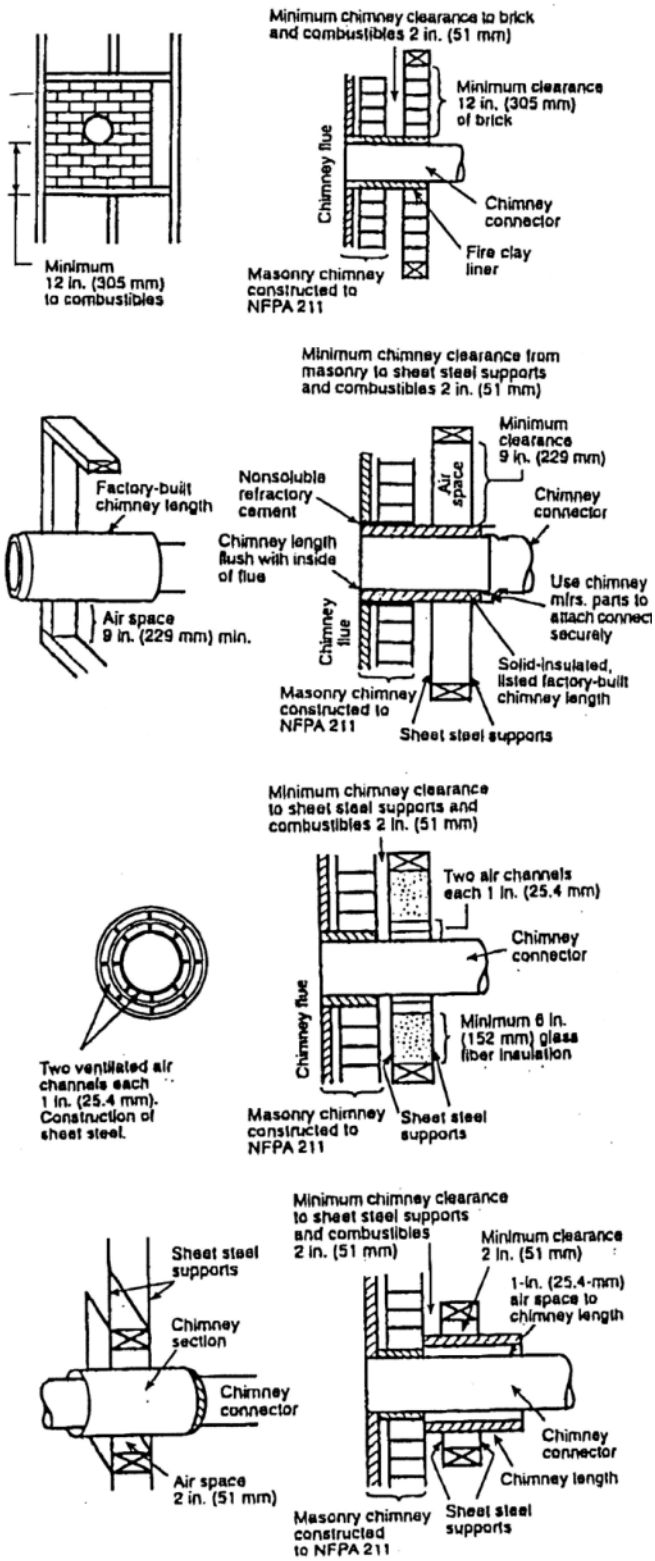

CHIMNEY CONNECTOR SYSTEMS AND CLEARANCES FROM COMBUSTIBLE WALLS FOR RESIDENTIAL HEATING APPLIANCES

A. Minimum 3.5in thick brick masonry all framed into combustible wall with a minimum of 12in. brick separation from clay liner to combustibles. The fire clay liner shall run from outer surface of brick wall to, but not beyond, the inner surface of chimney flue liner and shall be firmly cemented in place.

B. Solid-insulated, listed factory-built chimney length of the same inside diameter as the chimney connector and having 1in. or more of insulation with a minimum 9in. air space between the outer wall of the chimney length and combustibles.

C. Sheet steel chimney connector, minimum 24 gauge in thickness, with a ventilated thimble, minimum 24 gauge in thickness, having two 1in. air channels, separated from combustibles by a minimum of 6in of glass fiber insulation. Opening shall be covered, and thimble supported with a sheet steel support, minimum 24 gauge in thickness.

D. Solid insulated, listed factory-built chimney length with an inside diameter 2in. larger than the chimney connector and having 1in. or more of insulation, serving as a pass-through for a single wall sheet steel chimney connector of minimum 24 gauge thickness, with a minimum 2in. air space between the outer wall of chimney section and combustibles. Minimum length of chimney section shall be 12in. chimney section spaced 1in. away from connector using sheet steel support plates on both ends of chimney section. Opening shall be covered, and chimney section supported on both sides with sheet steel supports securely fastened to wall surfaces of minimum 24-gauge thickness. Fasteners used to secure chimney section shall not penetrate chimney flue liner.

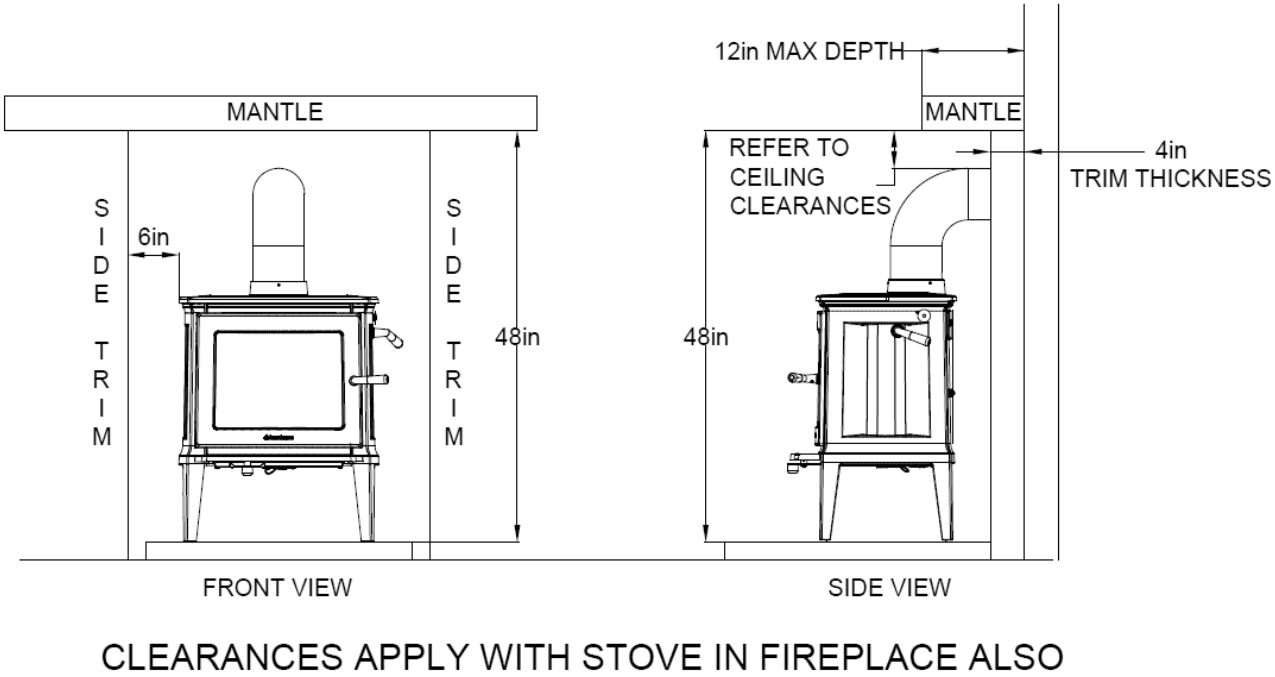

Figure 6 Trim and Mantle Clearances

OUTSIDE AIR SUPPLY

(Optional Kit #96-53400)

You can connect an outside air source directly to this stove using an optional outside air kit. The advantage of providing outside air directly to the stove is that the air used by the stove for combustion is taken from outside the residence rather than from within the room where the stove is located.

The outside air kit for this stove allows for the direct connection of the stove's air intake to a minimum 3" (76 mm) diameter duct (supplied by others)* which leads to the outside of the house. When considering placement of the duct from the outside of the house to the hearth, keep in mind the need to avoid structural members of the house. The outside air kit attaches to the underside of the stove. Refer to the instructions provided with the kit for installation.

*An adaptor for 4" duct is available if needed. KIT #90-53308

When using an outside air kit in Canada, the stove must be attached to your home's floor. Use the shipping clips that came with the stove and fasteners long enough to attach securely to the subfloor. (The clips and fastener heads may be painted to minimize visibility).

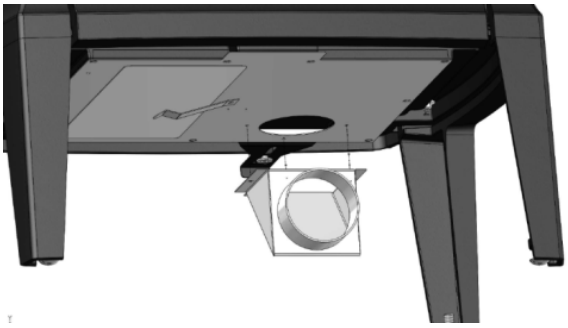

Figure 7 – Outside Air Kit Detail

The International Residential Code (IRC) does not allow the outside air duct to terminate higher than the appliance. Some building officials restrict vertical rise in the duct's termination. Hearthstone recommends the termination be at the same level, or lower than the air intake on the stove. When using an outside air kit in Canada, a damper allowing 100% closure shall be installed.

Locate the termination of the duct on the outside wall of the home in such a manner to avoid the possibility of obstruction by snow, leaves or other material. Screen the termination using ¼" x ¼" mesh rodent screen and cover it with a rain/wind proof hood (flex pipe, outside termination, mesh, and hood supplied by others) Contact your dealer for availability.

VENTING COMPONENTS & CONFIGURATION REQUIREMENTS

- **DO NOT CONNECT THIS UNIT TO A CHIMNEY FLUE USED BY ANOTHER APPLIANCE**

- Single wall connector that is at least 24 MSG or 25 MSG blued steel stovepipe.

- Double wall connector (Rear pipe) which is used with a listed, factory-built “Type HT" chimney or with a masonry chimney to reduce clearances, is available from several manufacturers, your dealer can help you choose. Some air insulated connector pipe models recommended are Simpson Dura Vent DVL and Metalbestos DS. Security, GSW and Ameritec also manufacture acceptable Rear connector pipe.

- When used in a mobile home, a spark arrester is required. (See page 18)

- The chimney connector cannot pass through a floor or ceiling, nor any attic or roof space, closet or similar concealed space. Where venting requires passage through a wall or partition of combustible construction, the installation must conform to NFPA Code 211 or CAN/CSA - B365.

- Be sure to follow the manufacturer’s instructions to maintain an effective vapor barrier at the location where the chimney of other component penetrates the exterior of the structure

- It is very important to follow minimum clearances for chimney connectors to combustibles such as walls and ceilings when installing the stove. Typical chimney connector clearances are outlined below. The single wall clearances are generic; the double wall clearances shown are specifically for Simpson DuraVent DVL and may vary with other brands. ***Check the specifications from the manufacturer of your connector.***

COMPONENTS OF A VENTING SYSTEM

The complete venting system consists of several components: chimney connector, wall thimble, wall pass-through, chimney, and liner. It is *absolutely necessary* that you install all of these components and maintain the clearances to combustibles discussed earlier to ensure a safe stove installation.

To protect against the possibility of a house fire, you *must properly install and constantly maintain the venting system in good condition. Be sure to inspect the chimney and chimney connector and keep it clean.* Upon inspection, immediately replace rusted, cracked, or broken components. Failure to follow these instructions and specified components or using make-shift compromises can result in fire, property damage, bodily injury, and even death.

- The *chimney connector* is the stovepipe from the woodstove to the chimney. The chimney connector stovepipe is 6" (152 mm) diameter, 24 MSG or 25 MSG blued steel connector pipe. *Do not use aluminum or galvanized steel pipe* - they cannot withstand the extreme temperatures of a wood fire.
- The *thimble* is a manufactured (or site-constructed) device installed in combustible walls through which the chimney connector passes to the chimney. It keeps the walls from igniting. You must use a wall thimble when installing a chimney connector through a combustible wall to the chimney.

- A *wall pass-through* (or chimney support package) also keeps the walls from igniting. You must use one when connecting through a wall or ceiling to a prefabricated chimney.

- Only install this stove to a *lined masonry chimney* or an *approved high temperature prefabricated residential* type building heating appliance chimney. *Do not* connect this stove to a chimney serving another appliance; you will compromise the safe operation of both the wood stove and the connected appliance.

- A *liner* is the UL 1777 or ULC S635 (for factory built fireplace or masonry) chimney.

You must connect your stove to a chimney comparable to those recommended in this manual. *Do not use stovepipe as a chimney*. Use stovepipe for freestanding installations only to connect the stove to a proper chimney.

- **WARNING: DO NOT CONNECT THIS APPLIANCE TO ANY AIR DISTRIBUTION DUCT OR SYSTEM.**

INSTALLING A VENTING SYSTEM

Attach stovepipe sections to the flue collar and to each other with the crimped end toward the stove. If creosote builds up, this allows the creosote to run into the stove and not on the outside of the stovepipe or onto the stove.

Secure all joints, including attaching the stovepipe to the stove's flue collar, with three sheet metal screws. Install #10 x 1/2" (3 mm x 13 mm) sheet metal screws into the holes pre-drilled in the flue collar. Disregarding the screws can cause joints to separate from the vibrations that result from a creosote chimney fire.

You can simplify connecting stovepipe by using additional accessories such as telescoping pipes, slip-connectors or clean-out tees. These accessories ease the periodic inspection of your chimney, as well as allow you to dismantle the stovepipe easily (without moving the stove).

Install the stove as close as practical to the chimney, while maintaining all proper clearances. Install stovepipe that is as short and as straight as possible. Horizontal runs of stovepipe must always rise away from the stove at a minimum of 1/4" per foot (21mm/m).

We do not recommend long runs of stovepipe to increase heat dispersal. Longer lengths of stovepipe, or more connecting elbows, than necessary increase the chances of draft resistance and the accumulation of creosote buildup.

In general, you do not need to install a stovepipe damper with the Craftsbury. Some installations, however, could benefit from a stovepipe damper, such as a tall chimney which can create a higher than normal draft. In such cases, a damper can help regulate the draft. The Craftsbury requires a draft between -0.06" and -0.1" WC. For drafts above -0.1" WC, install a stovepipe damper. To vent the Craftsbury directly out the back flue exit, a minimum draft of -0.08” WC is required. Check the draft at stove installation time.

Remember, the NFPA recommends minimum clearances for chimney connectors to combustibles such as walls and ceilings. Once the stove is installed at safe distances from these combustible surfaces, it is also important to maintain these connector clearances for the remainder of the installation.

REAR EXIT INSTALLATION

The Craftsbury may be installed with a direct rear flue. In the rear exit configuration, a draft of -0.08” WC or more is necessary to ensure the proper function of stove. Do not install the stove in the rear exit configuration if you do not have sufficient draft. The minimum chimney height is 15’ for rear exit configurations.

The Craftsbury is shipped in the vertical flue configuration. To install the stove in the rear flue configuration, switch the positions of the flue collar and the flue plate following these steps:

1. Using a 5/32” hex key, remove the flue collar from the top of the stove by removing the two screws visible within the flue collar.
2. Remove the rear heat shield. Loosen the two screws and lift the heat shield to remove it.
3. Using a 5/32” hex key, remove the flue plate from the back of the stove by removing the two visible screws.
4. Install the flue collar on the back of the stove and the flue plate on the top of the stove using 2 screws each. Be sure to keep the ¼” gasket in the channel on both the flue collar and the flue plate to ensure a sealed firebox.
5. Using metal snips, remove the section of the rear heat shield to allow the pipe to pass through it.
6. Re-install the rear heat shield. The two screws should fit in the keyhole features of the shield. Be sure the standoffs are correctly positioned behind the heat shield and tighten it in place.

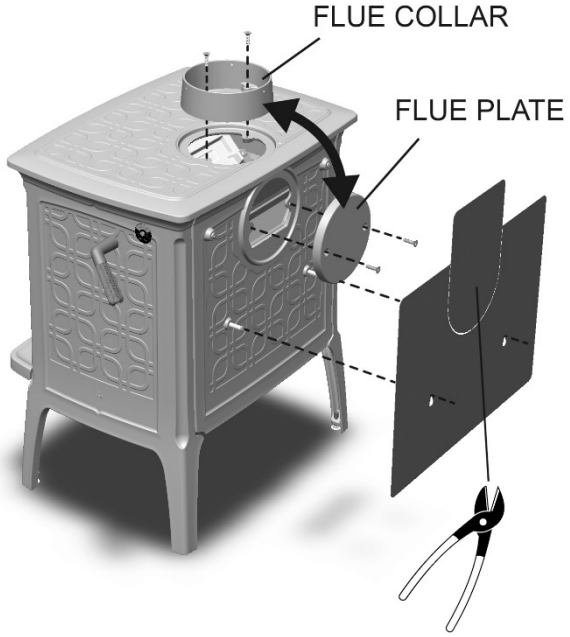

Figure 8 – Rear Exit

CONNECTING THE STOVE TO A CHIMNEY

You can install your Craftsbury to a prefabricated metal chimney, or to a masonry chimney.

This room heater must be connected to (1) a listed Type HT (2100° F) chimney per UL 103 or ULC S629, or (2) a code-approved masonry chimney with a flue liner. The chimney size should not be less than the flue collar, or more than three times greater than the cross-sectional area of the flue collar.

We recommend installing a cleanout tee where possible to simplify chimney cleaning and maintenance.

Connecting to a Prefabricated Metal Chimney

There are two ways to install a prefabricated metal chimney:

- An *interior* installation where the chimney passes inside the residence through the ceiling and roof.
- An *exterior* installation where the chimney passes through the wall behind the stove then up the outside of the residence.

Whenever possible, choose an interior chimney. An interior chimney heats up quickly and retains its heat; thus promotes a better draft and discourages the formation of creosote. An exterior chimney does not benefit from the warmth of the building, so it typically operates at lower flue temperatures than an interior chimney and may experience increased creosote accumulation.

When connecting the Craftsbury to a prefabricated metal chimney, you must follow, precisely, the manufacturer's installation instructions. Use only Type HT (2100° F), prefabricated metal chimneys listed per UL 103 or ULC S629 standards.

Ensure the size of the prefabricated chimney's flue is appropriate for the Craftsbury. The Craftsbury requires a 6" (152 mm) inside diameter flue for new installations. A 6" diameter flue provides adequate draft and performance. You can use an 8" (203 mm) diameter existing flue with a reducer. An oversized flue contributes to creosote accumulation. (In this case, bigger is NOT better.)

When purchasing a prefabricated chimney to install with your stove, Ensure you also purchase from the same manufacturer the wall pass-through (or ceiling support package), "T" section package, fire-stops (when needed), insulation shield, roof flashing, chimney cap, and any other required accessories. Follow the manufacturer's instructions when installing the chimney and accessories. In addition, ensure you maintain all manufacturers' recommendations for the proper clearances to the chimney.

Connection to a Masonry Chimney

Consider two primary elements when connecting your stove to a masonry chimney: the chimney itself and the thimble where the stovepipe connects to the chimney. **Use only code approved masonry chimneys containing a proper flue liner.**

Before connecting to a masonry chimney, hire a professional to examine the chimney for cracks, loose mortar, and other signs of deterioration and blockage. If the chimney needs repair, complete them before installing and using your stove. Do not install your stove until the chimney is safe for use.

Ensure the chimney's cleanout is complete and working properly. To avoid a loss of draft, the cleanout door must close completely and provide a tight seal. If the cleanout door leaks, the chimney will cool, your stove will perform poorly, and creosote can form.

Ensure the size of the chimney's flue is appropriate for this stove and that it is not too large. Use a masonry chimney with a maximum 6" Diameter or 8" x 8" (203 mm x 203 mm) tile size for best results. An oversized flue contributes to the accumulation of creosote.

Use the following checklist to ensure that your masonry chimney meets these minimum requirements:

Masonry Chimney wall construction:

- Mortared brick or modular block at least 4" (102 mm) thick – must use liner
- A mortared rubble or stone wall – must use liner

FLUE LINER OPTIONS:

- Tile - minimum wall thickness of 5/8" (16 mm), installed with refractory mortar, and with at least 1" (25 mm) air space around the liner
- Stainless steel - UL listed 6" diameter, insulated or wrapped liner, or the space around the liner filled with vermiculite or suitable material (these keep the liner warmer for better performance)
- Ensure any equivalent flue liner is a listed chimney liner system meeting type HT requirements or other approved material.

INTERIOR CHIMNEY REQUIREMENTS:

- Must have at least 2" (51 mm) clearance to combustible materials
- Must install fire stops at the spaces where the chimney passes through floors and/or ceiling
- Any insulation material must be at least 2" (51 mm) from the chimney

EXTERIOR CHIMNEY REQUIREMENTS:

- At least 1" (25 mm) clearance to combustible materials

CHIMNEY HEIGHT REQUIREMENTS (SEE FIGURE 9):

- At least 3 feet (0.9 m) higher than the highest part of the roof opening through which it passes.
- At least 2 feet (0.6 m) higher than any part of the roof within 10 feet (3 m) measured horizontally from the top of the chimney.

The recommended minimum chimney height is 15 feet (4.5m) off the floor. The recommended maximum chimney height is 30 feet (9m). The Craftsbury requires a draft between -0.06” and -0.1” water column. Ensure your chimney is long enough to provide the minimum draft, and use a damper if your installation has a required chimney height that provides too much draft.

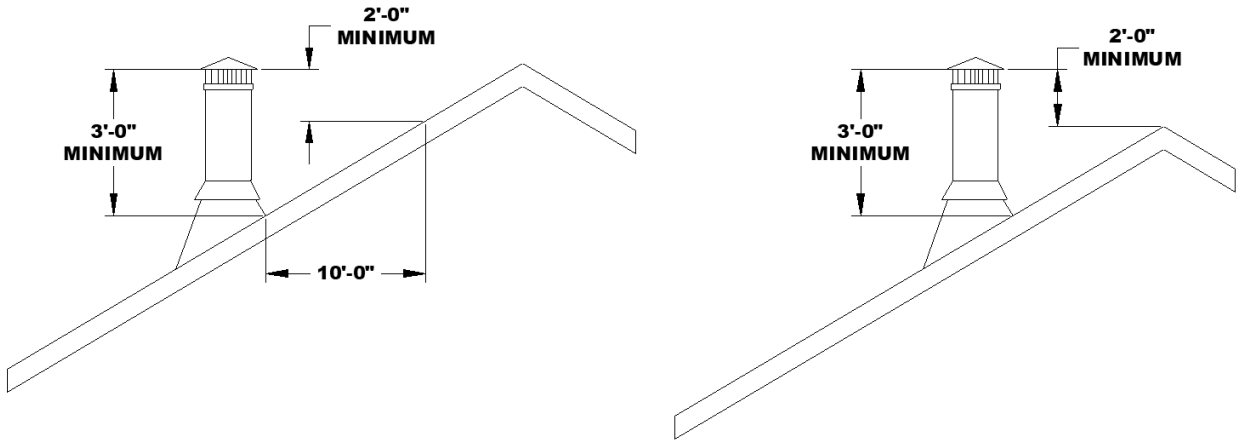

Figure 9 – Chimney Height Requirements

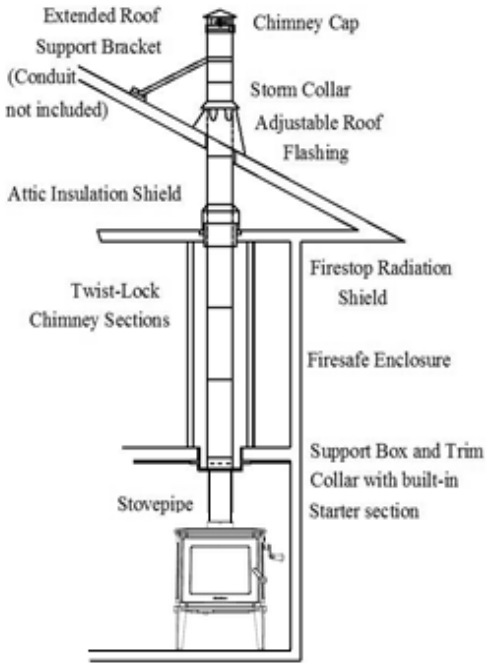

Two story house installation with attic.

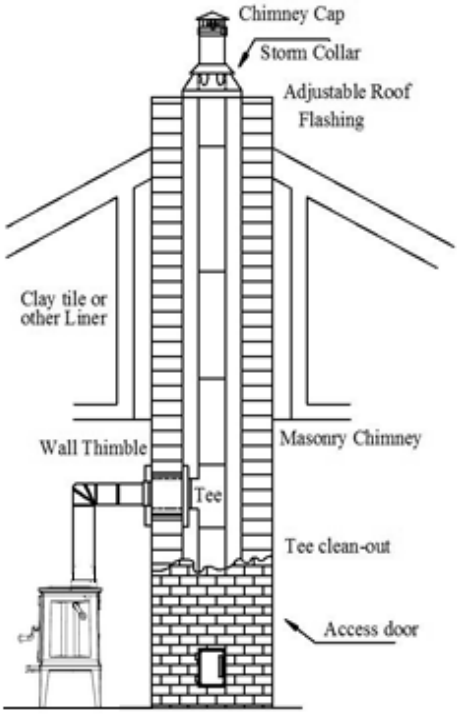

Chimney pipe through Clay tile
or other Lined Masonry Chimney

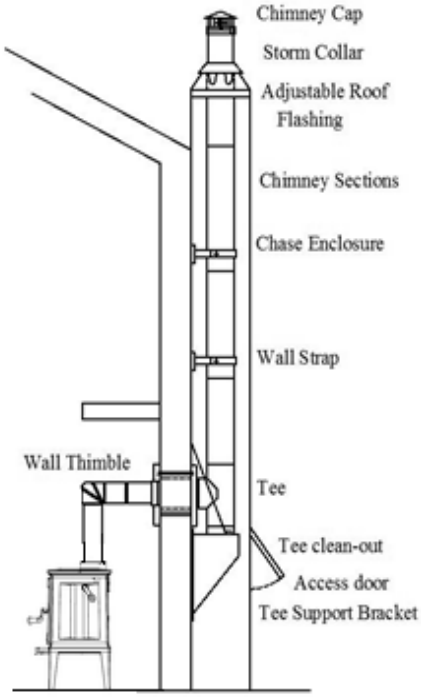

Chimney through outer wall with enclosed chase.
Chimney is supported by Tee Support Bracket.

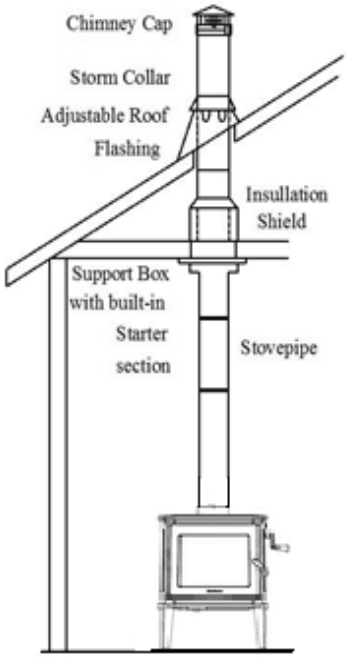

One story house installation with attic.
Chimney is supported by Ceiling.

Figure 10 – Typical Chimney Configurations

INSTALLING IN A MOBILE HOME

Follow these special requirements for installing your stove in a mobile home.

- Install the stove in accordance with 24 CFR, Part 3280 (HUD)
- An outside air kit must be used in all mobile home installations. See page 12 for details.
- Permanently attach the stove to your mobile home's floor. Use the shipping clips that came with the stove and fasteners long enough to attach securely to the subfloor. (The clips and fastener heads may be painted to minimize visibility).

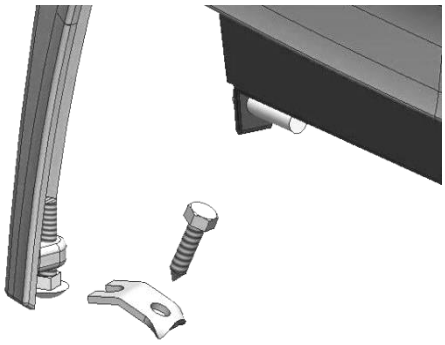

Figure 11 - Lock Down Detail

- Install a Mobile Home Chimney & Connector Kit*.

  Each kit must include:
  Stainless spark arrester cap, storm collar, Adjustable vented flashing – 0/12 – 6/12, Two 24" chimney pipes, 24" support box with built-in starter section and trim.

  * Install a Mobile Home Chimney and Connector Kit conforming to US/UL103 or CAN/ULC-S629, Standard for Factory-Built Chimneys.

- WARNING: DO NOT INSTALL IN A SLEEPING ROOM IN A MOBILE HOME.
- CAUTION: MAINTAIN THE STRUCTURAL INTEGRITY OF THE MOBILE HOME WALLS, FLOOR, CEILING, AND ROOF WHEN INSTALLING AND USING YOUR STOVE.
- FAILURE TO FOLLOW THESE INSTRUCTIONS AND SPECIFIED COMPONENTS OR USING MAKE-SHIFT COMPROMISES CAN RESULT IN FIRE, PROPERTY DAMAGE, BODILY INJURY, AND EVEN DEATH.
- Burning any fuel other than wood in this unit could generate dangerous levels of carbon monoxide within the living space.
- THE FRONT DOOR MUST REMAIN CLOSED WHEN IN OPERATION EXCEPT FOR START UP AND LOADING. Leaving the door open during use could cause any smoke or fire detectors in the home to be set off or a fire could escape the firebox and start the room on fire.
- If this unit is installed in a mobile home, care must be taken to ensure adequate air is available. If not enough air is available it could starve the room of all the oxygen. (See page 27 for more details)
- The chimney should be attached directly to the stove and must extend at least 3 feet (.9 m) above the part of the roof through which it passes. The top of the chimney is to be at least 2 feet (.6 m) above the highest elevation of any part of the mobile home within 10 feet (3 m) of the chimney.
- All roof-chimney terminations should be able to be readily removed / re-installed at or below an elevation of 13-1/2 feet (4.1 m) above ground level without the use of special tools or instructions. The chimney assembly shall be provided with a mechanical securement means to secure the chimney to the ceiling support box.
- When a chimney exits the mobile home at a location other than through the roof, and exits at a point 7 feet (2.1 m) or less above the ground level on which the mobile home is positioned, a guard or method of enclosing the chimney shall be provided at the point of exit for a height up to 7 feet.
- The chimney guard shall not allow the passage of a ¾ inch (19.1 mm) diameter rod, and a ½" (12.7 mm) diameter rod shall not be able to touch the chimney when inserted through any part of the guard a distance of 4 inches (102 mm).

- The chimney shall be provided with a spark arrester secured to the chimney. The net free area of the arrester above the chimney outlet shall not be less than 4 times the net area of the chimney outlet, and the vertical height of the arrester above the chimney outlet shall not be less than ½ the diameter of the chimney flue. Openings shall not permit the passage of a sphere having a diameter of ½ inch (12.7 mm), and shall allow the passage of a sphere of 3/8" (9.6 mm).

- CAUTION: REMOVE THE CHIMNEY WHEN TRANSPORTING THE MOBILE HOME!

- Be sure to follow the manufacturer's instructions to maintain an effective vapor barrier at the location where the chimney of other component penetrates the exterior of the structure

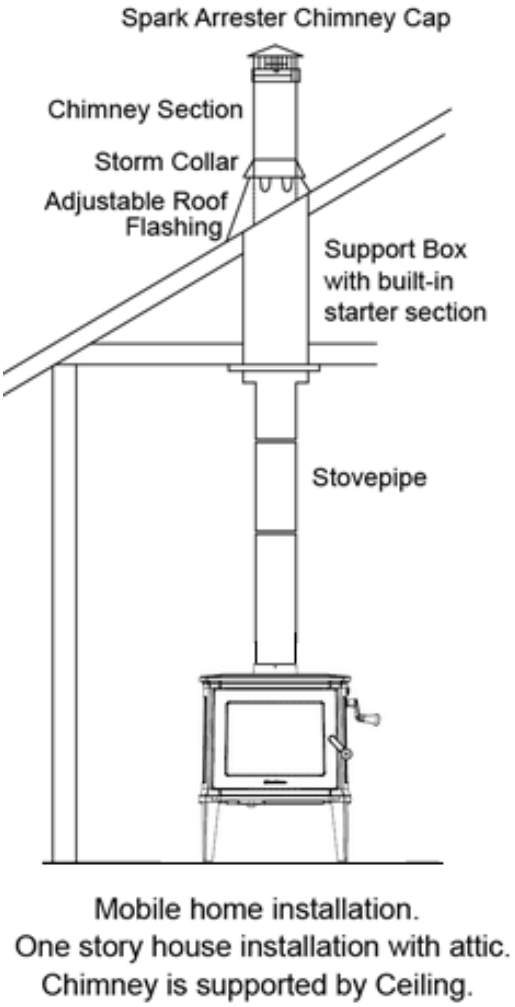

Figure 12 – Mobile Home Installation

OPERATION

Once your Craftsbury is installed, you are ready to light a fire.

Every installation, season's firewood, and operator's technique varies. Learn how to use your stove most efficiently for your installation. We can give you the basic principles, but only you can ensure maximizing the potential of your stove while also operating it safely.

- **WARNING: HOT WHILE IN OPERATION! KEEP CHILDREN, PETS, CLOTHING AND FURNITURE AWAY. CONTACT MAY CAUSE SKIN BURNS.**

Read this entire chapter before lighting your first fire. It explains the controls and features of your wood stove, how to choose firewood, and how to use your stove on a daily basis.

CONTROLS AND FEATURES

Before lighting any fires, become familiar with the location and operation of your stove's controls and features and learn how to use them (*See Figure 10*). For your own safety, do not modify these features in any way. We recommend you use fireplace gloves when the stove is in operation and hot.

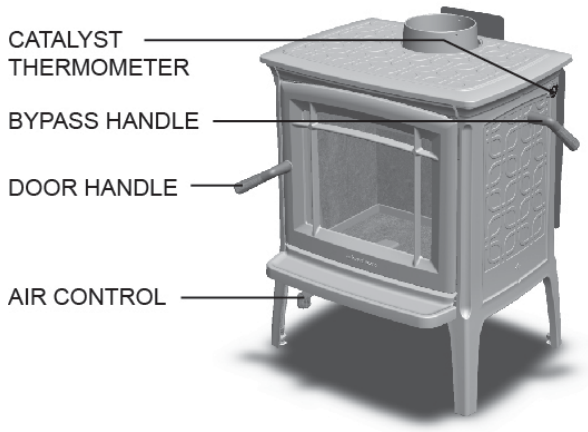

Figure 13 - Controls & Features

FRONT DOOR HANDLE: The firebox door allows you to load wood into your stove; a wood handle operates the door. To open the door, pull up on the handle and swing the door away from the stove. To latch the door, push the door tightly towards the firebox then continue to push the handle in and down until it latches shut. Gently pull on the door handle to make sure it is properly latched.

PRIMARY AIR CONTROL: The primary air control lever is located under the ash lip. The primary air control allows you to regulate the amount of air entering the firebox. Generally, the more air allowed into the firebox, the faster the rate of burn and the higher the heat output; conversely, less air creates a slower burn, with lower heat output. For maximum airflow, pull the lever out as far as possible; move the lever inwards as far as possible for minimum airflow (does not close completely).

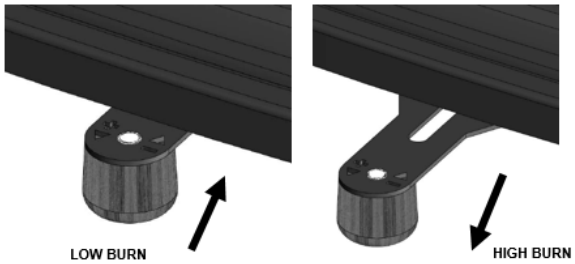

Figure 8 – Air Control

BYPASS HANDLE: The bypass handle controls the bypass door inside the stove. When the handle is pointed towards the front of the stove, the bypass door is open, and when the handle is pointed towards the rear of the stove, the bypass door is closed. The bypass door directs the flow of combustion products through or around the catalytic combustor. When the bypass handle is open, combustion products are directed around the catalytic combustor. The bypass handle should be open when first staring a fire until the catalytic combustor heats up to activation temperature, and whenever opening the front door to load the stove. When the bypass handle is closed, combustion products are directed through the catalytic combustor. The bypass handle should be closed once the catalytic combustor heats up to activation temperature, and remain closed whenever the stove is burning and in the active temperature range.

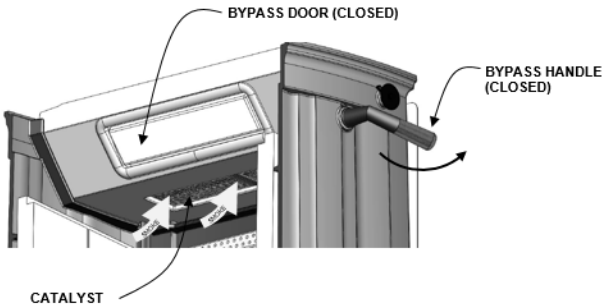

Figure 9 – Bypass Closed

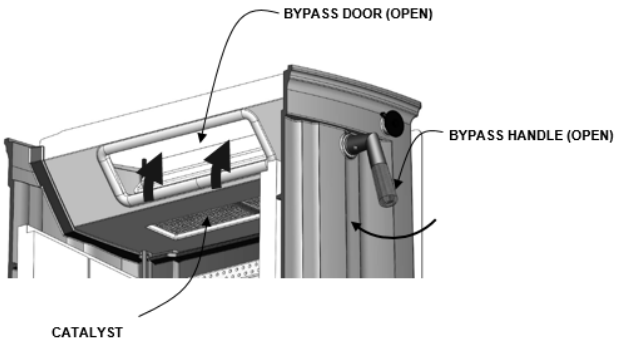

Figure 10 – Bypass Open

CATALYST THERMOMETER: The catalyst thermometer monitors the downstream temperature of the catalysts, and indicates when the stove is in the active range for the catalysts. When the stove is in the "active" range, the bypass handle should be closed. When the stove is in the "Inactive" range, the bypass handle should be opened until the stove heats up. If the thermometer is in the "Too Hot" range, keep the door closed, fully close the air control, and allow the stove to cool down until the thermometer falls into the "Active" Range. Once the catalyst thermometer has reached the active range, heat generated from burning smoke keeps the catalysts warm and active as long as fuel remains in the stove. The Craftsbury typically operates in the 800 ºF to 1300 ºF range.

Figure 11 – Catalyst Thermometer

CHOOSING FIREWOOD

Burn only natural firewood (known as cordwood) in the Craftsbury Model 8640 Wood Heater. This stove is not designed to burn other fuels.

- **CAUTION: DO NOT USE CHEMICALS OR FLAMMABLE FLUIDS TO START THE FIRE. DO NOT USE CHARCOAL, PELLETS, COAL, ARTIFICIAL LOGS OR ANY OTHER MATERIALS AS FUEL; THEY ARE NOT SAFE. DO NOT BURN GARBAGE OR FLAMMABLE FLUIDS.**
- **THE USE OF UNAUTHORIZED FUEL SUCH AS COAL COULD PRODUCE HIGH LEVELS OF CARBON DIOXIDE IN THE LIVING SPACE. AT HIGH LEVELS CARBON DIOXIDE COULD RESULT IN PERSONAL INJURY OR DEATH.**

The quality of your firewood directly affects heat output, duration of burn and performance of your stove. Softwoods generally burn hotter and faster, while hardwoods burn longer and produce better coals. Density and moisture content are two critical factors to consider when purchasing wood.

The following is a list of some wood species and their relative BTU (British Thermal Unit) content. The higher the BTU content, the longer the burn. Firewood with higher BTUs is generally ideal for a wood stove.

Burn untreated wood only. Other materials such as wood preservatives, metal foils, coal, plastic, garbage, Sulphur, or oil may damage the catalysts.

Wood Heat Value: Sorted By Btu Content		
Common Name	**Lb/ cord**	**MBTU/ cord**
High		
Osage Orange (Hedge)	4,728	32.9
Hickory, Shagbark	4,327	27.7
Hop Hornbeam (Ironwood)	4,267	27.3
Beech, Blue (Ironwood)	3,890	26.8
Birch, Black	3,890	26.8
Locust, Black	3,890	26.8
Hickory, Bitternut	3,832	26.7
Locust, Honey	3,832	26.7
Apple	4,100	26.5
Mulberry	3,712	25.8
Oak, White	4,012	25.7
Medium High		
Beech, European	3,757	24
Maple, Sugar	3,757	24
Oak, Red	3,757	24
Ash, White	3,689	23.6
Birch, Yellow	3,689	23.6

Medium		
Juniper, Rocky Mtn	3,150	21.8
Elm, Red	3,112	21.6
Coffee tree, Kentucky	3.112	21.6
Hackberry	3,247	20.8
Tamarack	3,247	20.8
Birch, Gray	3,179	20.3
Birch, White (Paper)	3,179	20.3
Walnut, Black	3,192	20.2
Cherry	3,120	20
Ash, Green	2,880	19.9
Cherry, Black	2,880	19.9
Elm, American	3,052	19.5
Elm, White	3,052	19.5
Sycamore	2,808	19.5
Ash, Black	2,992	19.1
Maple, Red	2,924	18.7
Fir, Douglas	2,900	18.1
Medium Low		
Boxelder	2,797	17.9
Alder, Red	2,710	17.2
Pine, Jack	2,669	17.1
Pine, Norway (Red Pine)	2,669	17.1
Pine, Pitch	2,669	17.1
Catalpa	2,360	16.4
Hemlock	2,482	15.9
Spruce, Black	2,482	15.9
Pine, Ponderosa	2,380	15.2
Low		
Aspen, American	2,290	14.7
Butternut (Walnut, White)	2,100	14.5
Spruce	2,100	14.5
Willow	2,100	14.5
Fir, Balsam	2,236	14.3
Pine, White (Eastern, Western)	2,236	14.3
Fir, Concolor (White)	2,104	14.1
Basswood (Linden)	2,108	13.8
Buckeye, Ohio	1,984	13.8
Cottonwood	2,108	13.5
Cedar, White	1,913	12.2

Moisture content also plays a key role in the performance of your stove. Wood freshly cut from a living tree (green wood) contains a great deal of moisture. As you might expect, green wood burns poorly. You must season green wood before using it in your wood stove. To season green wood properly, split, stack, and allow it to air dry for a period of one year. Green wood may provide less than 2000 Btu per pound, whereas dry wood can provide up to 7000 Btu per pound.

Stack the firewood on skids or blocks to keep it off the ground, cover only the top of the stack. Plastic or tarps that cover the sides of the woodpile trap moisture and prevent the wood from drying. As for stacking, an old Vermonter said, "The spaces between the logs should be large enough for a mouse to get through, but not for the cat that's chasing it."

- **CAUTION: DO NOT STORE FIREWOOD WITHIN THE STOVE'S SPECIFIED CLEARANCES TO COMBUSTIBLE MATERIALS.**

BUILDING A FIRE

Once you understand the controls of your wood stove and have the appropriate firewood, you are ready to start a fire.

- **WARNING: NEVER USE GASOLINE, GASOLINE-TYPE LANTERN FUEL, KEROSENE, CHARCOAL LIGHTER FLUID, OR SIMILAR LIQUIDS TO START OR 'FRESHEN UP' A FIRE IN THIS HEATER. KEEP ALL SUCH LIQUIDS WELL AWAY FROM THE HEATER WHILE IT IS IN USE.**

BREAKING IN YOUR WOOD STOVE

It is imperative that your stove is "broken in" gradually. Soapstone must be "seasoned"; over-firing a new stove may cause soapstone to crack or may damage other stove parts. Natural moisture in the freshly quarried soapstone must be driven out slowly to minimize the “shock” to the stone of its first exposure to high firebox temperatures. In addition, the asbestos-free furnace cement must be cured slowly to ensure adequate sealing and bonding.

When you light your first fires, the woodstove will emit some smoke and fumes. This is normal “off-gassing” of the paints and oils used when manufacturing the woodstove. If you find it necessary, open a few windows to vent your room. The smoke and fumes will usually subside after 10 to 20 minutes of operation. The odor and smoke will end once the stove is “cured”.

The first few fires of the season may produce other odors from impurities that exist in the area immediately surrounding the stove. Some potential impurities are cleaning solvents, paint solvents, cigarette smoke, and soot from scented candles, pet

hair, dust, adhesives, a new carpet, and new textiles. These odors will dissipate over time. You can alleviate these odors by opening a few windows or otherwise creating additional ventilation around your stove. If any odor persists, contact your dealer or an authorized service technician.

If you adhere to the operating procedures in this manual, the steel, cast iron, and soapstone components of your stove will give you many years of trouble-free use. With use, the color of the soapstone may change and small fractures may appear on the surface. These changes do not affect the function of the stove. If a panel breaks completely, it must be replaced

Avoid the following conditions that can cause the glass, soapstone, steel or cast iron pieces to break:

- Do not throw wood into the stove.
- Do not use the door as a lever to force wood into the stove.
- Do not load wood encrusted with ice into a burning stove - the thermal shock can cause damage.
- Do not use a manufactured log grate or otherwise support the fuel. Burn the fire directly on the floor of the firebox.

BUILDING A BREAK IN FIRE

1) Open the bypass handle.Open the front door and place five or six double sheets of tightly twisted newspaper in the center of the firebox. Arrange kindling in a crisscross pattern over the newspaper. Kindling should be approximately ten pieces, 1/2" (13 mm) in diameter and 10" to 16" (254 mm to 457 mm) long.

2) Fully open the primary air control by pulling the control handle towards you, away from the firebox.

3) Light the paper under the kindling. Leave the door slightly ajar momentarily until the kindling has started to burn and draft begins to pull.

4) Close the door and allow the fire to burn. Keep the door closed while the stove is in use.

5) KEEP A WATCHFUL EYE ON YOUR STOVE to maintain a steady, low-heat fire. Your first fire should make the stove warm but **not hot to the touch**. Visible steam, or boiling moisture and hissing indicate the soapstone is too hot. At most, a few small chunks of wood should be added to the fire to reach safe break-in temperatures.

6) Once the stove is warm but **not hot to the touch,** close the primary air control by pushing it fully inward toward the stove to allow the fire to die out completely.

7) Let the stove return to room temperature.

Your first fire and first fire each season thereafter should be built and maintained as outlined above. Your patience will be rewarded by a properly seasoned stove.

- NOTE: The cool flue gas temperatures present during the break-in procedure may cause rapid creosote build-up. The door glass may also get dirty. A good hot fire will clean it. We recommend a visual inspection (and cleaning if necessary) of your stovepipe and chimney once the break-in procedure is completed.

NORMAL OPERATION

BUILDING A FIRE FOR EVERYDAY USE

1) Open the bypass handle. Open the front door and place five or six double sheets of tightly twisted newspaper in the center of the firebox. Arrange kindling in a tee-pee configuration over the newspaper. Use approximately 10 pieces of kindling, 1/2" (13 mm) in diameter and 10" to 16" (254 mm to 406 mm) long.

2) Fully open the primary air control by pulling the lever completely out, away from the firebox.

3) Light the paper under the kindling. Leave the front door slightly ajar momentarily until the kindling begins to burn and draft begins to pull.

4) Close the door and allow the fire to burn.

5) Once the kindling is burning, open the front door and add logs, small at first, to build the fire up. Ensure you keep the logs away from the glass in front in order for the air-wash system to work properly. Keep the front door closed while the stove is in use.

   CAUTION: DO NOT BUILD THE FIRE TOO CLOSE TO THE GLASS. KEEPING THE FIRE TOWARDS THE CENTER OF THE FIRE BOX WILL KEEP COALS FROM BUILDING UP AGAINST THE GLASS DURING RELOADING.

6) Once the fire is burning well, and the catalyst thermometer indicates that the stove is in the

active range, close the bypass handle. Now the combustion products are passing through the catalytic combustor, and your stove will be burning at its optimal efficiency.

7) After closing the bypass door, allow the stove to run on a high setting for around 20 minutes to ensure the catalytic combustor stays in the active range. This will also allow the fire to burn off any residue on the door glass from any previous low-burn fires

8) Use the primary air control to regulate the desired rate of burn. Pull the handle towards you for a higher burn rate, and push the handle towards the stove for a lower burn rate. The air control does not close completely.

Note: Always remember to open the bypass handle before opening the front door. When opening the front door to reload or re-arrange logs, it is advisable to open the door just a crack, pause for a moment then open the door completely. This procedure allows the firebox to clear of smoke before the door is open fully. In addition, reloading on a bed of hot, red coals reduces smoking time and brings fresh fuel up to a high temperature rapidly. During the refueling and rekindling of a cool fire, or a fire that has burned down to the charcoal phase, operate the stove at a medium to high firing rate for about 10 minutes to ensure that the catalysts reach approximately 600 °F. Once the catalysts reach operating temperature, the bypass handle can be closed. When reloading the stove, try to keep an open path behind the Lower Primary Air Opening (LPAO). It is helpful to leave a small valley in the coal bed behind the LPAO to insure faster re-lighting.

CATALYTIC COMBUSTOR OPERATION

The Craftsbury uses a catalytic combustor to ensure highly clean and efficient burns. The catalytic combustor is made from a stainless steel corrugation that is coated with a catalytic material. The catalytic combustor becomes active around 500 ºF (260ºC), helping to burn up smoke and any remaining particles that were not fully burned in the firebox. During the startup of a cold stove, a medium to high firing rate must be maintained for about 20 minutes. This ensures that the stove, catalysts, and fuel are all stabilized and at proper operating temperatures. Even though it is possible to have gas temperatures reach 500 °F (260ºC) within 2 to 3 minutes after a fire is started, if the fire is allowed to die down immediately, it may go out or the combustor may stop working. Once the stove and catalytic combustor heat up, heat generated from burning smoke keeps the catalysts warm and active as long as fuel remains in the stove. You stove will burn the cleanest and most efficiently when the catalysts are in the active range. There should be little to no visible smoke from your chimney when the catalysts are in the active zone and fully functional.

BURN RATE

This wood heater has a manufacturer-set minimum low burn rate that must not be altered. It is against federal regulations to alter this setting or otherwise operate this wood heater in a manner inconsistent with operating instructions in this manual

LOW BURN: Move the air control lever all the way inward toward the stove. (*See figure 13*). This closes the air shutter to its minimum opening. A low burn rate over extended periods is not advisable as it can promote the accumulation of creosote. Inspect the venting system frequently if using low burn rates consistently.

MEDIUM LOW BURN: With the primary air control in the low position, pull the air control forward (a little less than 1/4”). A medium-low burn rate is the typical setting and is preferable if the stove is unattended. At this burn rate, a little goes a long way.

MEDIUM HIGH BURN: With the primary air control in the low position, pull the air control forward (a little less than 3/8”)

HIGH BURN: Completely open the primary air control by moving it all the way outward toward the operator. Fully load the firebox with wood on a bed of hot coals or on an actively flaming fire. To minimize creosote accumulation, run the stove on high once or twice daily for 35 to 45 minutes to fully heat the stovepipe and chimney.

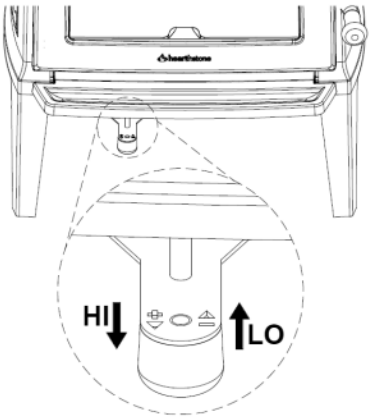

Figure 12 – Air Control Position

CAUTION: Do not burn fuel other than cordwood in your stove.

OVER-FIRE CAUTION

Over-firing means the stove is operating at temperatures above normal temperatures reached during High Burns outlined in the *BURN RATE* section. Carefully avoid over-firing, as it will damage the stove. Symptoms of chronic over-firing can include warped components, short burn times, a roaring sound in the stove or stovepipe, and discoloration of the stovepipe. A properly installed stove using fuel and following operating procedures as outlined in this manual should not over-fire.

Excessive draft, inappropriate fuel, and operator error can cause over-firing. Correct an over-fire situation as follows:

- **EXCESSIVE DRAFT:** Contact your local dealer to have a draft reading taken. Any draft in excess of 0.1 WC requires a damper in the stovepipe. Some installations may require more than one damper.
- **INAPPROPRIATE FUEL:** Do not burn coal; kiln dried lumber, wax logs, compressed wood, highly volatile fuels or combustibles, or anything other than natural cordwood.
- **OPERATOR ERROR:** Ensure all the gaskets are in good condition. Replace worn out or compressed gaskets. Only burn the stove with the firing and ash doors in the closed position.

If you suspect your stove is over-firing, discontinue use and contact your dealer immediately. **Damage caused by over-firing is not covered by your warranty**. Results of over-firing can include warped or burned out internal parts, cracked refractory panels, discolored or warped external parts, and damaged finish.

- **ANY SIGNS OF OVER-FIRING WILL VOID YOUR WARRANTY!**
- **THE FRONT DOOR MUST REMAIN CLOSED WHEN IN OPERATION**

REMOVAL AND DISPOSAL OF ASHES

You can leave a thin layer of ashes in the firebox if preferred. Allow fire to die down or go out completely. It is important to prevent ashes from building up around the front door opening or they will spill out, or they can pack into the gasket channel and prevent proper sealing. To remove ashes, use a fireplace shovel. Avoid removing large live coals by pushing them to the side and removing only the finer ash with a shovel.

Disposal of ashes - Ashes should be placed directly into a **metal** container with a tight fitting lid. Do not place any other items or trash into the metal container. Do not pour water into the container. Replace the container's lid and allow the ashes to cool. Never place the ash disposal container on a combustible surface or vinyl flooring, as the container could be **hot!**

Pending disposal, place the closed ash container on a noncombustible floor or on the ground outside, well away from all combustible materials, liquid fuels, or vehicles. Retain ashes in the closed container until all coals thoroughly cool.

If the ashes are disposed of by burial in soil or otherwise locally dispersed, they should be retained in the closed container until all cinders have thoroughly cooled.

NEVER place ashes in wooden or plastic containers, in trashcans with other trash, or in paper or plastic bags, no matter how long the fire has been out. Coals within a bed of ashes can remain hot for several days once removed from the firebox.

MAINTENANCE

CATALYTIC COMBUSTOR INSPECTION AND REPLACEMENT PROCEDURES

- **WARNING: THIS WOOD HEATER CONTAINS A CATALYTIC COMBUSTOR, WHICH NEEDS PERIODIC INSPECTION AND REPLACEMENT FOR PROPER OPERATION. IT IS AGAINST FEDERAL REGULATIONS TO OPERATE THIS WOOD HEATER IN A MANNER INCONSISTENT WITH OPERATING INSTRUCTIONS IN THIS MANUAL, OR IF THE CATALYTIC ELEMENT IS DEACTIVATED OR REMOVED**

It is important to periodically monitor the operation of the catalytic combustor to ensure that it is functioning properly and to determine when it needs to be replaced. A non-functioning combustor will result in a loss of heating efficiency, and an increase in creosote and emissions. Following is a list of items that should be checked on a periodic basis

-Combustors should be visually inspected at least three times during the heating season to determine if physical degradation has occurred. Actual removal of the combustor is not recommended unless more detailed inspection is warranted because of decreased performance. If any of these conditions exists, refer to Catalyst Troubleshooting section of this owner's manual.

-This catalytic (or hybrid) heater is equipped with a thermometer to monitor catalyst operation. Properly functioning combustors typically maintain temperatures in excess of 500 °F, and often reach temperatures in excess of 1,000 °F. If catalyst temperatures are not in excess of 500 °F, refer to the Catalyst Troubleshooting section of this owner's manual.

You can get an indication of whether the catalysts are working by comparing the amount of smoke leaving the chimney when the smoke is going through the combustor and catalysts light-off has been achieved, to the amount of smoke leaving the chimney when the smoke is not routed through the combustor (bypass mode).

1. Light stove in accordance with operator's instructions
2. With smoke routed through the catalysts, go outside and observe the emissions leaving the chimney.
3. Engage the bypass mechanism and again observe the emissions leaving the chimney. Significantly more smoke will be seen when the exhaust is not routed through the combustor (bypass mode)

INSPECTING THE CATALYSTS AND REMOVING/REPLACING THE BAFFLE

1. Allow the stove and ashes to fully cool.
2. Remove the metal baffle protector by sliding it to the left or right, and then rotating it towards you.
3. Lift up on the right-side baffle, and gently pull the left side baffle down and out of the stove

CAUTION - Do not force the baffle pieces. Gently adjust the baffle orientation until each side can be removed freely from the stove.

Figure 19a – Removing / Replacing the Baffle

Figure 19b – Removing / Replacing the Baffle

4. Use a small vacuum nozzle or soft bristled brush to remove any accumulated ash or soot on the face of the catalyst.
5. Inspect the catalyst for any unusual warping, corrosion, or plugged openings.
4. Use a small vacuum nozzle or soft bristled brush to remove any accumulated ash or soot on the face of the catalysts.
5. Inspect the catalysts for any unusual warping, corrosion, or plugged openings.
6. If any unusual conditions are found, remove the catalyst blocks – See replacing the catalysts.
7. Replace the baffles and baffle protector. Installation is the opposite of removal.
8. Ensure that the baffle pieces are pushed together at the center joint.

REMOVING OR REPLACING THE CATALYSTS

Refer to the Catalytic combustor warranty on page 35 for catalyst replacement information. DO NOT OPERATE UNIT WHITOUT CATALYSTS. Only remove the catalysts if required. In general, the less you handle the catalysts, the better. If any unusual conditions are found, remove the catalyst blocks

1. Allow the stove and ashes to fully cool.
2. Loosen, but do not remove the screws securing the rear heatshield. (If stove is so equipped).
3. Remove the heat shield by sliding the screw heads through the slots in the heatshield.
4. Remove the 2 bolts securing the cast iron catalyst access cover, and remove the cover.
5. Inspect the catalysts for visible damage or fly ash. If fly ash exists, gently brush the

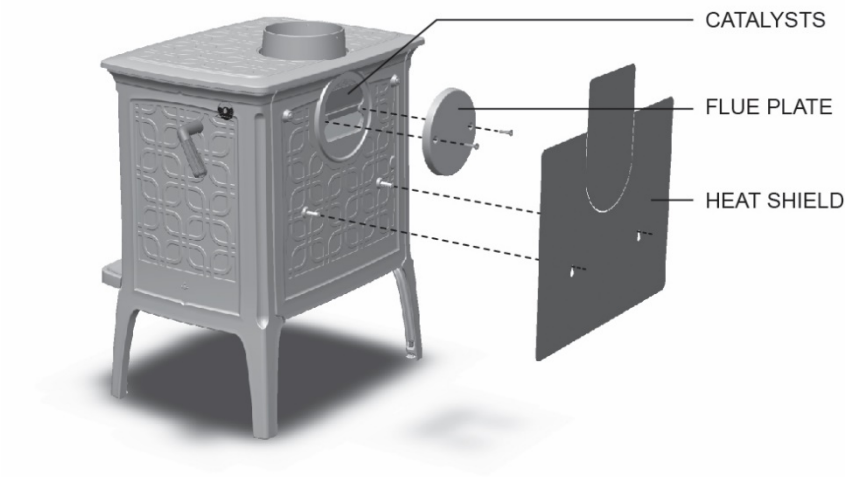

Figure 20 – Catalyst Access

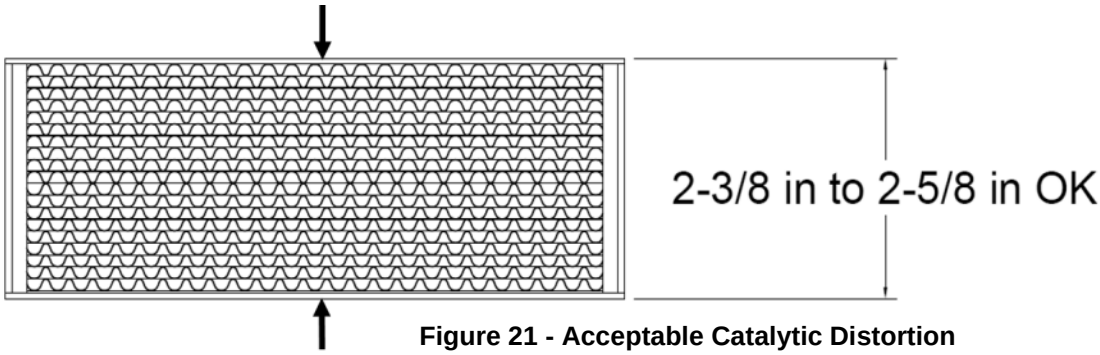

Figure 21 - Acceptable Catalytic Distortion

catalysts off with a narrow soft-bristle brush, or vacuum with a crevice tool.

6. If fly ash exists, or if there are suspected catalyst performance issues, fully remove the catalysts by gently pulling upwards from the ribs in the cast iron, and then pulling outwards through the catalyst access opening.
7. Remove any remaining gasket material from the opening and from the catalysts.
8. Inspect the catalysts for any fly ash or clogging, and remove with a soft bristled brush or vacuum crevice tool. If extra cleaning is needed, follow the guidelines below:
   - -You may use compressed air under 35 psi, air only, no chemicals.
   - -You may soak the catalysts in a hot water mix (not boiling), 4 parts water, 1 part vinegar. Rinse with cold water until vinegar smell is mostly gone.
   - -No metal tools such as gun cleaners should be used.
   - -No detergents or chemicals.
9. Some warping or bowing of the catalysts over time is acceptable, as long as the catalyst gasket continues to seal. Measure the catalysts in the middle section – if the dimensions are outside the range shown in Figure 21, replace the catalysts.
10. Beginning at one corner, re-install fiberglass gasket material on the catalysts.

11. Wrap the gasket tape around the catalysts so it is reasonably tight. Double layer the material on three sides of the individual catalyst cartridges as shown in the following picture.

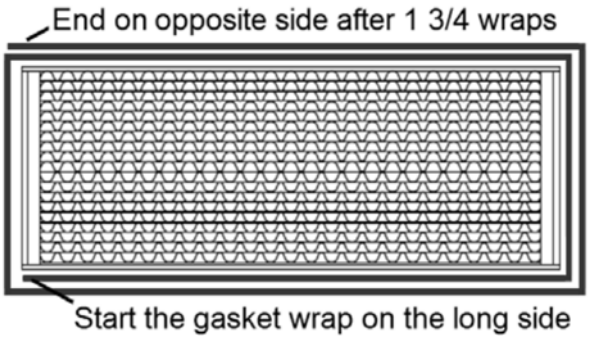

12. Once the gasket is installed on the catalysts, gently push the catalysts into the catalyst opening until the catalysts hit against the back wall of the cavity. Take care to ensure the gasket is not damaged and position the two cartridges so that the single layer gasket edges touch one another in the center. Replace the catalyst access door.

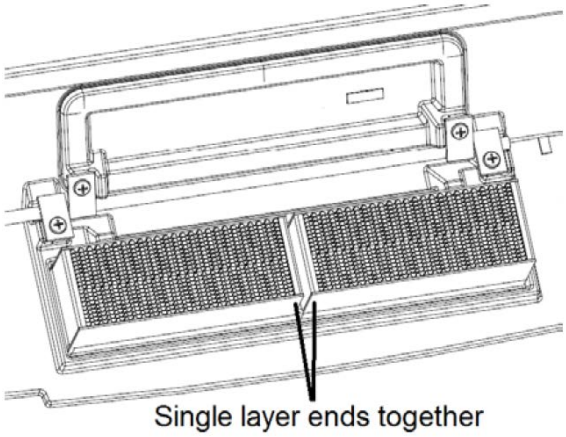

13. Replace catalyst access door.

14. Heat the stove slowly during your next fire to allow the Interam gasket to fully expand and seal the catalysts.

REPLACING THE REFRACTORY STONE AND SECONDARY RISER ASSEMBLY

1. Allow the stove and ashes to fully cool.
2. Open the front door of the stove and fully clean any ash in the firebox
3. Remove the baffle following the instructions in “Inspecting the Catalysts and Removing/Replacing the baffle.
4. Remove the side stones one at a time by tipping them towards the inside of the firebox from the top.
5. With side stones and baffle removed, the secondary riser assembly and rear stones can be lifted up and out of the stove.
6. Installation is the reverse of disassembly. Make sure that the secondary riser tube is seated in the pocket at the rear of the bottom casting.

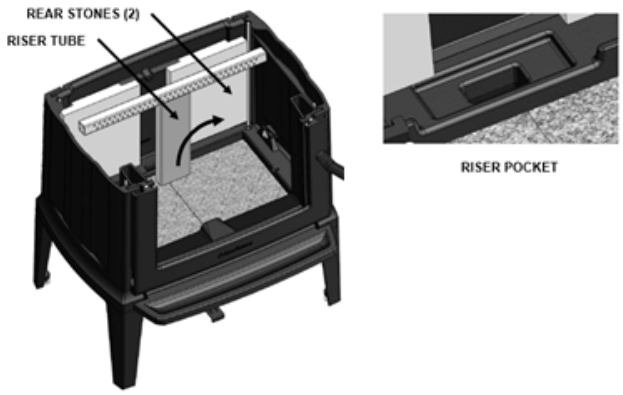

Figure 22 - Removing Riser and Rear Stones

GLASS REPLACEMENT PROCEDURES

- **WARNING: DO NOT OPERATE THIS APPLIANCE WITH THE GLASS PANEL REMOVED, CRACKED, OR BROKEN. DO NOT SUBJECT THE DOOR TO ABUSE, SUCH AS STRIKING OR SLAMMING SHUT. ONLY A QUALIFIED SERVICE PERSON SHOULD REPLACE THE GLASS PANEL.**

1. Follow the instructions included with the replacement glass kit.
2. Remove the door.
3. Remove the screws from the glass clips (use penetrating oil if necessary) – Set aside for reinstallation.
4. Carefully lift the damaged glass off the door and discard.
5. Remove any remaining glass and old gasket material.
6. Clean the screw holes and place a small amount of anti-seize compound in each one.
7. Install a new glass gasket in the glass gasket groove.
8. Place the new glass onto the door.
9. **Important! Center the glass** and ensure that the edges of the glass are parallel with the edges of the opening.
10. Check glass position again (centered, and parallel), then screw the glass retainer clips with the glass pads back on the door using a crisscross pattern. Tighten the screws no more than 1/8th of a turn after they seat. The glass will break at this point if not positioned correctly.
11. Apply a light film of anti-seize lubricant on the door’s hinge pins if needed.
12. Install the door.
13. After 5 or 6 fires, check the glass retainer screws, and retighten if necessary.

Required Glass Kit: Part Number: 93-58925. Use only Ceramic, or Neoceram glass. Contact your Hearthstone dealer.

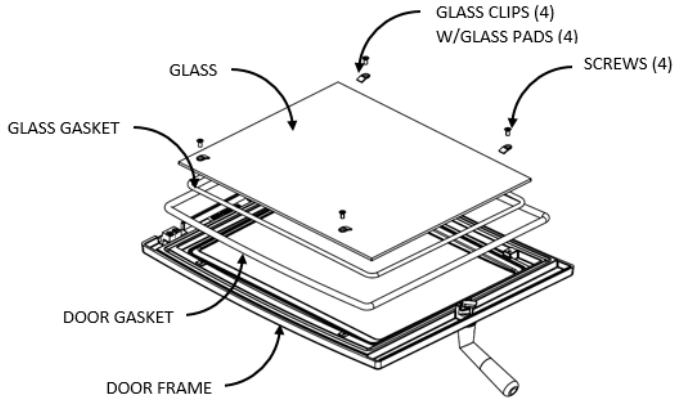

Figure 23: Front Door assembly

CREOSOTE FORMATION & REMOVAL

When wood burns slowly at low temperatures, it may produce tar and other organic vapors, which combine with expelled moisture to form creosote. These creosote vapors condense in the relatively cool chimney flue of a slow-burning fire. As a result, creosote residue accumulates on the flue lining. When ignited, this creosote makes an extremely hot fire, which may damage the chimney or even destroy the house. When burning wood, inspect the chimney connector and chimney at least once every two months during the heating season to determine if there is a creosote buildup.
If a creosote build-up occurs, inspect the stovepipe connector and chimney more often, at least monthly during the heating season to monitor the accumulation. If a creosote residue greater that 1/4" (6 mm) accumulates, remove it to reduce the risk of a chimney fire.

Prevention

Burn the stove with the primary air control fully open for 35 - 45 minutes daily to burn out creosote deposits from within the stove and the venting system.

After reloading with wood, burn the stove with the primary air control fully open for 15 to 20 minutes. This manner of operation ensures early engagement of the secondary combustion system that minimizes creosote buildup in the chimney.

If your glass always remains dirty, your operating temperatures are too low or your wood is wet; therefore, there is a higher risk of creosote buildup.

Inspect the venting system at the stove connection *and* at the chimney top. Cooler surfaces tend to build creosote deposits faster, so it is important to check the chimney at the top (where it is coolest) as well as from the bottom near the stove.

Cleaning

Remove accumulated creosote with a cleaning brush specifically designed for the type of chimney in use. We recommend you use a certified chimney sweep to perform this service. Contact your dealer for the name of a certified chimney sweep in your area (your dealer may be a certified sweep!).

We recommend that before each heating season you have the entire system professionally inspected, cleaned and repaired, if necessary.

GASKETS

Replace door gasket material every two to three seasons, or whenever it becomes deteriorated or loose, depending on stove use. If the door seal leaks, a new gasket will ensure a tight seal and improve stove performance.

We recommend you only use Hearthstone replacement gaskets when you need to replace your door gasket. Contact your dealer for a gasket kit that includes instructions, and the gasket for your stove.

GLASS

The glass used in our stoves is actually not plain glass, but a tough, clear ceramic material capable of operating at temperatures up to 2300° F. Do not operate the stove with a broken door glass. Do not abuse the front door by striking or slamming.

When necessary, clean the glass. For the inside surface of the glass, we recommend using a damp paper towel dipped in gray ash. Rub the inside of the glass with a circular motion. When all the deposits are removed, clean up with window cleaner or with commercial stove glass cleaners, which are available from your local dealer. Use this type of cleaner for the outside surface as well. Never attempt to clean the glass while the fire is burning or while the glass is hot. Remove deposits by following the instructions provided with the cleaner. Wipe the cleaner off with a soft cloth, or black & white newsprint.

> **Important:** scratching or etching the glass will weaken the integrity of the glass. Do not use a razor blade, steel wool, or any other abrasive material to clean the glass. Use a cleaner specifically manufactured for woodstoves only.

The front door glass is a ceramic, thermal shock-resistant glass, made specifically for use in woodstoves. Do not use any replacement glass other than the ceramic glass manufactured and supplied for use in this woodstove. Replacement glass is available through your local dealer.

Replace the door glass immediately if broken or chipped. Contact your local dealer for replacement glass. The glass kit includes instructions and everything needed for the repair. If you replace the glass yourself, wear work gloves and safety glasses.

Required Glass Kit: PN: 93-58925.

TROUBLESHOOTING

COMMON ISSUES

Virtually all woodstove operators experience basic common problems at one time or another. Most are correctable and generally require only a minor adjustment of the stove, installation, or operating technique. In cases where weather conditions dramatically affect stove performance, the problems are typically temporary and solve themselves once the weather changes.

If you question whether your stove is producing adequate heat, the best way to troubleshoot the problem is to monitor the temperature of the stack no more than 12 inches (30 cm) above the flue collar. A 400° F (200° C) stovepipe confirms the stove is supplying sufficient heat. Keep in mind that your house itself will regulate room/house temperatures. How well the walls, floors and ceilings are insulated, the number and size of windows, the tightness of outside doors, and the construction or style of your house (vaulted ceilings or other open spaces which collect large percentages of heat, ceiling fans, etc.) all are determining factors of room temperature.

Your stove's performance is also dependent on its installation. One common cause of poor performance is an oversized chimney flue. Oversized chimney flues result in decreased draft, which prevents the smoke from rising out the chimney. Oversized flues are also more difficult to heat effectively, especially when burning a high efficiency stove. Cool flue temperatures inhibit the establishment of a strong draft (and encourage the accumulation of creosote). The lack of a strong draft will cause the fire to die down and may even force smoke to pour into the room.

If your chimney is the proper size and a strong draft is not easily established, there is the possibility that the chimney is too cold. Again, hot chimneys promote stronger drafts. Opening a window briefly in the room while lighting the stove may help.

Other draft guidelines are as follows:

An **"AIRTIGHT" HOUSE:** The air supply (infiltration) to the interior of the house may be inadequate if your home is super-insulated or especially well sealed. This phenomenon of air starvation within the building is exacerbated if exhaust fans, such as clothes dryers, bathroom fans or cook stove exhaust fans, are in operation within the home. Outfitting your stove with the optional outside air adaptor connected to an air duct, which leads to the outside of the building, can correct this problem.

Tall Trees or Buildings: These obstructions, when located close to the top of the chimney can cause chronic or occasional downdrafts. When selecting a site for a new chimney, consider the placement of other objects near the proposed chimney location.

Wind Velocity: Generally, the stronger and steadier a wind, the stronger (better) the draft. However, "gusty" wind conditions can cause erratic downdrafts. For consistent problems, consider a high wind cap, such as the Vacu-Stack.

Barometric Pressure: Chimney drafts are typically sluggish on balmy, wet or muggy days (low barometric pressure). This is a weather-related phenomenon, which generally is self-correcting as the weather changes.

Briskness of Fire: The hotter the fire in your stove, the hotter your chimney and, therefore, the stronger the draft.

Breaks in the Venting System: An unsealed clean-out door at the bottom of the chimney, leaky stovepipe joints, a poor stovepipe-to-thimble connection, missing caps, or a leaky chimney all can cause inadequate draft.

Seasonal Factors: Early fall and late spring are generally difficult seasons in which to establish proper drafts. The colder the outside air is relative to room temperature, the stronger the draft.

Operating the Stove

As outlined above, there are days when a good draft is just not easy to establish. The causes are usually seasonal factors or a cold chimney. Try starting the fire by using small kindling and fuel to obtain a quick, hot fire. Tend the fire frequently with small fuel until the chimney is hot and the draft is well established. Sometimes, partially opening a first floor window briefly will help quickly get draft established.

TROUBLESHOOTING GUIDE

PROBLEM	POSSIBLE CAUSE	SOLUTIONS
STOVE SMOKES	Operating Technique	Fully open the primary air control one minute before opening doors, and ensure the bypass is open before opening door.
	Cold Chimney or reverse draft	Preheat the chimney when first starting a fire. Briefly open a window in the room containing the stove.
	Blocked Chimney	Examine the chimney and stovepipe for blockage or creosote accumulations.
	Oversized Chimney	Reline the chimney to the appropriate diameter
	Undersized Chimney	Install a draft inducer or replace the chimney.
	Chimney Too Short	Lengthen the chimney.
	Air Infiltration Into The Chimney	Seal chimney connections and openings. Check clean-out doors.
	Bypass not closed	Ensure that the bypass door is closed when the catalysts are in the active range.
	Catalysts not functioning	Inspect catalysts for damage, ash build-up, or plugging. Brush catalysts with a soft-bristled brush, or vacuum lightly. Replace if required. Follow instructions to ensure catalyst light-off.
	Not burning proper fuel	Ensure cordwood is seasoned and dry.
	More Than One Appliance Connected to the Flue	Disconnect all other appliances and seal openings.
BACK-PUFFING OR GAS EXPLOSIONS	Operating Technique	Fully open the primary air control one minute before opening the door and keep it fully open for a few minutes after reloading. Ensure the bypass door is open before opening the door
	Extra Low Burn Rate	Burn the stove at a higher burn rate.
	Chimney Down-draft	Install a chimney cap.
	Excessive Ash Build-up	Empty the ash pan more frequently. Increase efficiency of burns, and avoid using poor quality or green wood.
UNCONTROLL-ED OR SHORT BURN	Unsealed or Open Door	Close the door tightly or replace the gaskets. Air leakage around glass gasket – replace gasket
	Excessive Draft	Check the installation. Operate at LOW BURN. Install stovepipe damper. Draft in excess of 0.1 wc should be corrected with a stovepipe damper(s)
	Extra Long Chimney	Shorten the chimney. Install stovepipe damper(s).
	Oversized Chimney	Reline the chimney to the proper diameter.
	High Winds or Hilltop Location:	Install a chimney cap.
INSUFFICIENT HEAT	Poor Quality, low Btu content, or Green Wood	Use only air-dried wood, preferably dried at least one year. Use a wood with a high Btu content if available.
	Low Burn Rate	Operate the stove at a higher burn rate.
	Cold Exterior Chimney	Reline or insulate the chimney.
	Leaky Stovepipe or Chimney	Check the installation. Replace with a pre-fabricated insulated chimney system or a properly sized masonry chimney.
	Too Much Heat Loss From House	Add insulation, use energy efficient windows, or caulk windows, and seal openings in home.
	Excessive Ash Build-up	Empty the ash pan more frequently. Increase efficiency of burns, and avoid using poor quality or green wood.
BLISTERING OF FINISH	Operating Technique	Do not over-fire the stove. Monitor stove temperatures. Use seasoned wood only.
	Excessive Draft	Check the DRAFT. A damper may be required. Operate the stove at a LOW BURN range.

CATALYST TROUBLESHOOTING GUIDE

PROBLEM	POSSIBLE CAUSE	SOLUTIONS
FLY ASH BUILD UP ON CATALYSTS	Catalysts have not maintained light-off temperature	Brush cold combustor with soft-bristled brush or vacuum lightly. Follow instructions in the manual for a proper catalyst light-off
	Burning materials that cause a lot of char and fly-ash	Don't burn cardboard, gift wrap paper, or garbage. Burn only dry, seasoned wood, per the owner's manual.
	Bypass closed too soon	Follow instructions in the manual for a proper catalyst light-off
CATALYSTS PLUGGING OR MASKING (SOOT/CRESO-TE)	Burning wet, pitchy woods, or burning large loads of small diameter wood with the combustor in the operating position without catalyst light off occurring	Burn dry seasoned wood. Follow instructions in the manual for a proper catalyst light-off, and ensure catalyst light-off as occurred before closing bypass damper. It may be possible to burn the soot or creosote off by building a hot fire, and allowing the stove to run until the catalysts are well within the operating range before closing the bypass. Continue to run the stove at a high temperature for one hour, while ensuring the catalysts stay in the upper operating range, but not too hot.
WARPING OR BOWING OF THE CATALYSTS	Excessive catalyst temperatures for long periods of time.	Ensure that the catalysts remain in the operating zone, and does not get to hot. Reduce air control settings for a lower burn rate to ensure catalyst temperatures do not exceed the operating range.

REPLACEMENT PARTS & OPTIONAL ACCESSORIES

PART #	DESCRIPTION
	REPLACEMENT PARTS
5640-002	BOTTOM HEAT SHIELD
5360-062	UPPER DOOR HINGE
5360-050	LOWER DOOR HINGE
5640-011	SECONDARY AIR RISER ASSEMBLY
5640-012	TIE ROD
5640-014	BAFFLE GUARD
5640-018	BYPASS ROD RETAINER
5491-045	DOOR CATCH
93-71911	DOOR LATCH
5640-024	REAR SHIELD (INCLUDED)
7200-520	CATALYST THERMOMETER
	REPLACEMENT KITS AND ACCESSORIES
96-53400	OUTSIDE AIR KIT
96-58400	GASKET KIT
93-58925	GLASS KIT
93-71920	HANDLE KIT
93-73920	FRONT DOOR LATCH KIT
96-75400	CATALYST REPLACEMENT KIT
96-76400	BAFFLE KIT
96-57400	BLOWER KIT

Refer to the Illustrated Parts list for further detail about stove components, available online at www.hearthstonestoves.com.

SAFETY LABEL

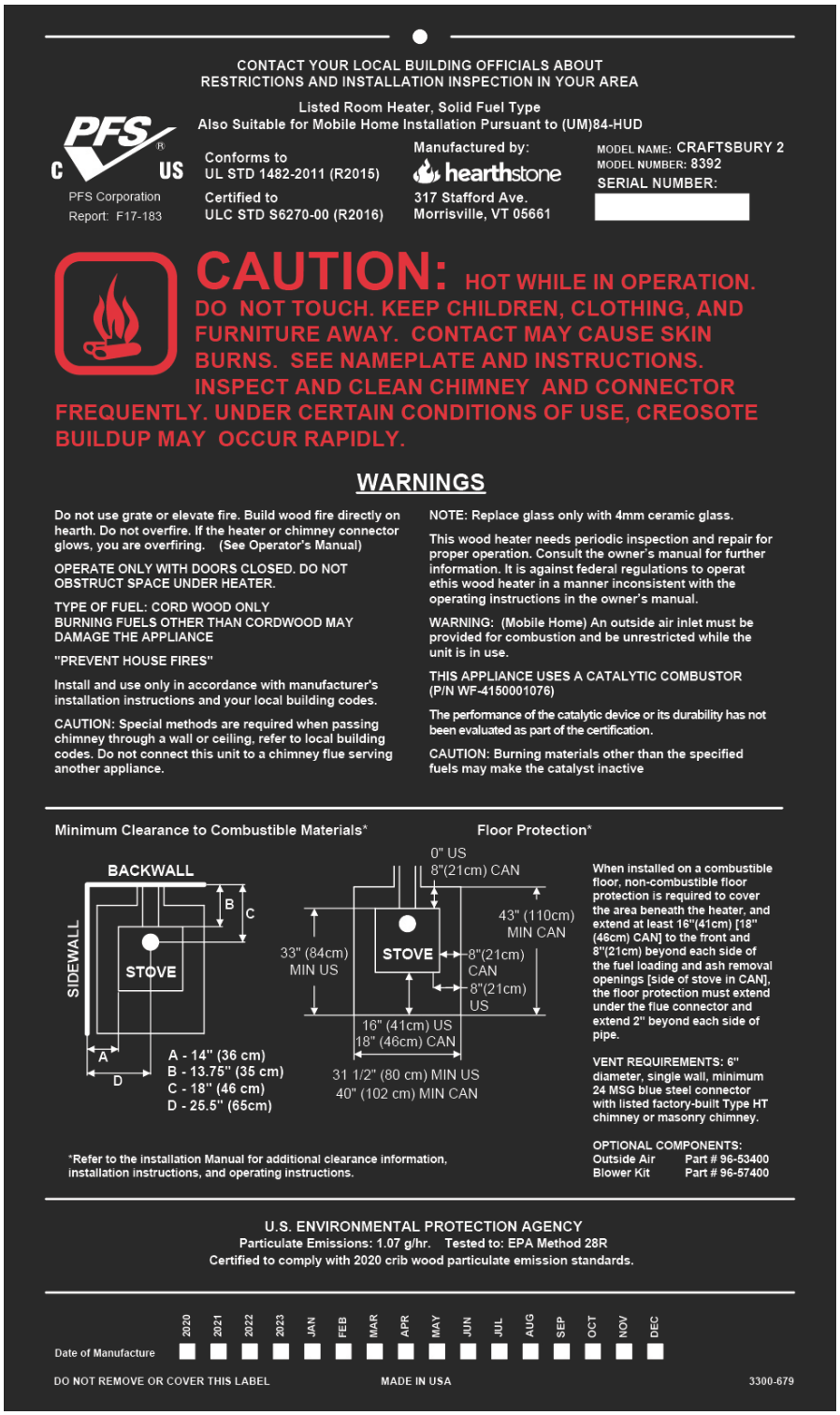

CONTACT YOUR LOCAL BUILDING OFFICIALS ABOUT
RESTRICTIONS AND INSTALLATION INSPECTION IN YOUR AREA

Listed Room Heater, Solid Fuel Type
Also Suitable for Mobile Home Installation Pursuant to (UM)84-HUD

PFS C US
PFS Corporation
Report: F17-183

Conforms to
UL STD 1482-2011 (R2015)
Certified to
ULC STD S6270-00 (R2016)

Manufactured by:
hearthstone
317 Stafford Ave.
Morrisville, VT 05661

MODEL NAME: CRAFTSBURY 2
MODEL NUMBER: 8392
SERIAL NUMBER:

CAUTION: HOT WHILE IN OPERATION. DO NOT TOUCH. KEEP CHILDREN, CLOTHING, AND FURNITURE AWAY. CONTACT MAY CAUSE SKIN BURNS. SEE NAMEPLATE AND INSTRUCTIONS. INSPECT AND CLEAN CHIMNEY AND CONNECTOR FREQUENTLY. UNDER CERTAIN CONDITIONS OF USE, CREOSOTE BUILDUP MAY OCCUR RAPIDLY.

WARNINGS

Do not use grate or elevate fire. Build wood fire directly on hearth. Do not overfire. If the heater or chimney connector glows, you are overfiring. (See Operator's Manual)

OPERATE ONLY WITH DOORS CLOSED. DO NOT OBSTRUCT SPACE UNDER HEATER.

TYPE OF FUEL: CORD WOOD ONLY
BURNING FUELS OTHER THAN CORDWOOD MAY DAMAGE THE APPLIANCE

"PREVENT HOUSE FIRES"

Install and use only in accordance with manufacturer's installation instructions and your local building codes.

CAUTION: Special methods are required when passing chimney through a wall or ceiling, refer to local building codes. Do not connect this unit to a chimney flue serving another appliance.

NOTE: Replace glass only with 4mm ceramic glass.

This wood heater needs periodic inspection and repair for proper operation. Consult the owner's manual for further information. It is against federal regulations to operat ethis wood heater in a manner inconsistent with the operating instructions in the owner's manual.

WARNING: (Mobile Home) An outside air inlet must be provided for combustion and be unrestricted while the unit is in use.

THIS APPLIANCE USES A CATALYTIC COMBUSTOR (P/N WF-4150001076)

The performance of the catalytic device or its durability has not been evaluated as part of the certification.

CAUTION: Burning materials other than the specified fuels may make the catalyst inactive

Minimum Clearance to Combustible Materials*

A - 14" (36 cm)
B - 13.75" (35 cm)
C - 18" (46 cm)
D - 25.5" (65cm)

Floor Protection*

When installed on a combustible floor, non-combustible floor protection is required to cover the area beneath the heater, and extend at least 16"(41cm) [18" (46cm) CAN] to the front and 8"(21cm) beyond each side of the fuel loading and ash removal openings [side of stove in CAN], the floor protection must extend under the flue connector and extend 2" beyond each side of pipe.

VENT REQUIREMENTS: 6" diameter, single wall, minimum 24 MSG blue steel connector with listed factory-built Type HT chimney or masonry chimney.

OPTIONAL COMPONENTS:
Outside Air Part # 96-53400
Blower Kit Part # 96-57400

*Refer to the installation Manual for additional clearance information, installation instructions, and operating instructions.

U.S. ENVIRONMENTAL PROTECTION AGENCY
Particulate Emissions: 1.07 g/hr. Tested to: EPA Method 28R
Certified to comply with 2020 crib wood particulate emission standards.

Date of Manufacture: 2020 2021 2022 2023 JAN FEB MAR APR MAY JUN JUL AUG SEP OCT NOV DEC

DO NOT REMOVE OR COVER THIS LABEL MADE IN USA 3300-679

LIMITED WARRANTY

These warranties give you specific legal rights. You may also have other rights, which vary from State to State.

Hearthstone Quality Home Heating Products, Inc. (Hearthstone) warrants to the original retail purchaser only (the "Original Purchaser") the new appliance manufactured by Hearthstone, purchased by the Original Purchaser and installed by an authorized Hearthstone dealer or their designated representative against any of the occurrences listed in this document that result from defects in material or workmanship. This warranty is not transferrable. All obligations of Hearthstone under this document commence on the date of the Original Invoice (the "Purchase Date"). The term "Limited Lifetime" is defined as 10 years from the beginning of warranty coverage.
Hearthstone appliances are designed to be operated only with the fuels listed in your owner's manual.

Catalytic combustor LIMITED LIFETIME WARRANTY: The catalytic combustors are covered directly by the combustor manufacturer, Applied Ceramics. Included with your stove you will find the LIMITED LIFETIME WARRANTY for the catalysts, as well as a warranty card.

Catalyst Model Number: ACI-6M2 Catalyst Manufacturer: APPLIED CERAMICS

APPLIED CERAMICS warrants to the consumer who purchases a FIRECAT STEEL COMBUSTOR as a component in an EPA certified solid fuel appliance, to replace at no charge to the consumer the FIRECAT STEEL COMBUSTOR that ceases to function with two (2) years from the date of purchase by the original consumer, provided that the following conditions are met:

(1) A copy of the original bill of sale that includes place and date of purchase must be submitted with the warranty claim.
(2) The original FIRECAT STEEL COMBUSTOR must be returned to APPLIED CERAMICS
(3) The FIRECAT STEEL COMBUSTOR must not have been mechanically abused, nor must the wrong fuels have been used in the appliance.

If after two years the FIRECAT STEEL COMBUSTOR fails to function, the prorated warranty will allow replacement at the following special price schedule:

Year 3	$130.00
Year 4	$140.00
Year 5	$150.00
Year 6	$160.00
Year 7	and after at current retail price

Conditions 1, 2, and 3 also apply to the Prorated portion of the warranty. Any EPA certified solid fuel appliance will receive one replacement catalyst for each defective catalyst returned during the three year period. The consumer will be responsible for any removal, any servicing, and return of any items required for filing the warranty claim. This warranty is APPLIED CERAMIC'S exclusive warranty, and APPLIED CERAMICS, disclaims any other express or implied warranty for the FIRECAT STEEL COMBUSTOR, including any warranty or merchantability fitness for a particular use.

Ensure the catalyst is well wrapped and padded for shipment in bubble wrap, or similar material. Ship the catalyst with padding inside of a cardboard box.

All warranty claims must include $12.50 for postage and handling within the continental U.S. Alaska and Canada claims must include $35.00.

Please allow 2-3 weeks for delivery. Order online @ www.firecatcombustors.com

Please read and understand the full warranty. Please return the completed warranty card promptly to Applied Ceramics. The warranty card, and any warranty claims can be shipped to:
Applied Ceramics
55555 Pleasantdale Road
Doraville, GA, 30340

Stove components Limited Warranty

Warranty Period	Wood	Gas	Pellet	Covered Components
Limited Lifetime	X	X	X	Stone
	X	X	X	Cast iron not listed elsewhere
	X			Clean burning air supply system*
5 Year	X	X	X	Door handles and latches
	X	X	X	Steel Components and Firebox
		X		Burner and logs
3 Year			X	Burn Pot and Baffles
2 Year	X	X	X	Appliance Electrical and Gas Components
	X	X		Refractory, Vermiculite Panels, Baffles
1 Year	X	X	X	Enamel finish against peeling or fading
	X	X	X	Accessories
	X	X	X	Glass
	X			Ash Grate
	X	X	X	All components not listed elsewhere

Any parts repaired or replaced during the limited warranty period will be warranted under the terms of the limited warranty for a period not to exceed the remaining term of the original limited warranty or one year, whichever is longer.
Parts: Hearthstone will replace through an authorized dealer, defective parts covered by the foregoing warranty at no charge.
Labor: Within the first (1st) year after the Purchase Date, Hearthstone will pay for warranty labor performed by an authorized Dealer at Hearthstone's published labor rates in effect at the time the labor is performed only if the appliance is installed by an authorized dealer or their designated representative. Otherwise or thereafter, the Original Purchaser is responsible for the cost of labor.
Shipping cost for parts: Within the first ninety (90) days after the Purchase Date, Hearthstone will pay for the shipping of appliance parts covered by any of the foregoing warranties to and from Hearthstone or an authorized Dealer, as the case may be. Thereafter, the Original Purchaser is responsible for all shipping costs related to shipping appliance parts to and from Hearthstone or an authorized Dealer, as the case may be.
Shipping cost for the appliance: Within the first (1st) year after the Purchase Date, if the Original Purchaser is instructed to return the appliance to Hearthstone or an authorized Dealer for repair, Hearthstone will pay fifty percent (50%) and the Original Purchaser will pay fifty percent (50%) of the shipping costs related to shipping the appliance to and from Hearthstone or an authorized Dealer, as the case may be. Thereafter, the Original Purchaser is responsible for one hundred percent (100%) of all of the shipping costs related to shipping the appliance to and from Hearthstone or an authorized Dealer, as the case may be. Notwithstanding any other provision of this document, in no event will Hearthstone pay for any Dealer fees or other fees for pick up or delivery of the appliance returned for repair; the Original Purchaser shall be responsible for any such fees.

EXCLUSIONS & CONDITIONS
The warranties contained in this document do not cover, nor is Hearthstone responsible for:

1. Damages resulting from:
   a. Failure to install, operate, or maintain the appliance in accordance with the owner's manual, operating instructions, installation instructions, or safety rating label provided with the appliance.
   b. Over-firing the appliance. Over-firing can be identified by, but not limited to, warped cast iron or steel, rust colored cast iron, bubbling, cracking and discoloration of steel or enamel finishes.
   c. Failure to install the appliance in accordance with all national or local building codes.
   d. Shipping or improper handling.
   e. Improper operation, abuse, misuse, continued operation with damaged, corroded, or failed components, accident, or improper/incorrect service or repairs.
   f. Environmental conditions, inadequate ventilation, negative pressure, or improper drafting caused by tightly sealed constructions, insufficient make-up air supply, or air handling devices such as exhaust fans, forced air furnaces, or other such causes.
   g. Damage caused by direct exposure to water.
   h. Use of fuels other than those specified in the owner's manual.
   I. Installation or use of components not supplied with the appliance, or any other components not expressly authorized and approved by Hearthstone.
   J. Modifications of the appliance not expressly authorized and approved by Hearthstone in writing
   K. Interruptions or fluctuations of electrical power supplied to the appliance.
2. All stones are warranted against cracking or breakage due to thermal stress, excluding surface and hairline cracks and scratches that do not affect the operation, or safety of the appliance.
3. Repair or replacement of wear parts. Such parts that are subject to normal wear and tear during the warranty period such as paint, gaskets, baffles, refractory materials, ash grates, and glass.
4. Damage resulting from installation, modification, alteration, repair or service of the appliance by any party other than an authorized Hearthstone dealer (a "Dealer") or their designated representative, or Hearthstone.
5. Damage due to water or condensation due to installation of the appliance in a high moisture area.
6. Damage due to installation of the appliance in an atmosphere contaminated by damaging chemicals, including but not limited to chlorine, fluorine or salts.
7. Scratches on glass, enameled surfaces or stones due to mechanical abrasion.
8. Noise caused by expansion or contraction caused by the heating and cooling of the appliance.
9. Odors caused by the heating of the appliance, or surrounding materials
10. Consequential damage caused by leaking of condensate during startup
11. A defect in any part of the appliance if the Original Purchaser fails to comply with Hearthstone's or a Dealer's request to ship the part or the appliance to Hearthstone or a Dealer, as the case may be.
12. Replacement stones and enameled parts are taken from current stock, and may not match originals in color, grain, or pattern. Hearthstone will supply replacement parts for discontinued parts in finishes or colors as available, or at their discretion.
13. Hearthstone's obligation under this warranty does not extend to the appliance's ability to heat the desired space. Information is provided to assist the customer and the dealer in selecting the appropriate appliance for the application. Consideration must be given to appliance location and configuration, environmental conditions, insulation and air tightness of the structure.

THE WARRANTIES CONTAINED IN THIS DOCUMENT ARE EXCLUSIVE AND ARE GIVEN BY HEARTHSTONE AND ACCEPTED BY THE ORIGINAL PURCHASER IN LIEU OF ALL OTHER EXPRESS WARRANTIES AND ANY OBLIGATIONS, LIABILITIES, RIGHTS, CLAIMS, OR REMEDIES IN CONTRACT OR TORT, WHETHER OR NOT ARISING FROM HEARTHSTONE'S NEGLIGENCE, ACTUAL OR IMPUTED. ALL IMPLIED WARRANTIES, INCLUDING THE WARRANTIES OF MERCHANTABILITY AND FITNESS FOR A PARTICULAR PURPOSE, ARE GIVEN ONLY TO THE EXTENT REQUIRED BY FEDERAL OR STATE LAW. EXCEPT AS OTHERWISE REQUIRED BY STATE LAW, UPON THE EXPIRATION OF THE EXPRESS LIMITED WARRANTIES CONTAINED HEREIN, NO IMPLIED WARRANTIES, INCLUDING THE IMPLIED WARRANTIES OF MERCHANTABILITY OR FITNESS FOR A PARTICULAR PURPOSE, SHALL APPLY TO THE SUBJECT APPLIANCE. SOME STATES DO NOT ALLOW LIMITATIONS ON HOW LONG AN IMPLIED WARRANTY LASTS, SO THE ABOVE LIMITATION MAY NOT APPLY TO YOU.

THE WARRANTIES CONTAINED IN THIS DOCUMENT EXTEND ONLY TO THE ORIGINAL PURCHASER OF THE APPLIANCE WARRANTED HEREUNDER. THEY ARE NOT TRANSFERRABLE AND DO NOT EXTEND TO ANY SUBSEQUENT OWNERS.

UNDER NO CIRCUMSTANCES SHALL HEARTHSTONE BE LIABLE TO THE ORIGINAL PURCHASER OR ANY OTHER PERSON FOR ANY INCIDENTAL OR CONSEQUENTIAL DAMAGES, INCLUDING BUT NOT LIMITED TO DAMAGE TO PROPERTY OR PERSONAL INJURIES, WHETHER ARISING OUT OF LOSS OF USE, BREACH OF WARRANTY, TORT, OR OTHERWISE, EVEN IF HEARTHSTONE HAS BEEN APPRAISED OF THE POSSIBILITY OF SUCH DAMAGES. SOME STATES DO NOT ALLOW THE EXCLUSION OR LIMITATION OF INCIDENTAL OR CONSEQUENTIAL DAMAGES, SO THE ABOVE LIMITATION OR EXCLUSION MAY NOT APPLY TO YOU.

QUALIFYING FOR WARRANTY COVERAGE

To obtain performance of any obligation under this document, the Original Purchaser must, within the applicable warranty time period, contact their original Hearthstone dealer, or the current responsible local Hearthstone dealer, for instructions regarding the return of defective parts for repair, the return of the appliance for repair, or to schedule a Dealer service call. The Original Purchaser should refer to the Dealer Network search engine contained on Hearthstone's Web site (www.hearthstonestoves.com) if the original dealer is not available, to find a Hearthstone dealer nearest to the Original Purchaser's location.

REMEDY

The remedy for any breach of the foregoing warranties will consist of repair or replacement, at Hearthstone's option, of any covered defect in the appliance. When the Original Purchaser contacts a Hearthstone Dealer, the Dealer on behalf of Hearthstone, as the case may be, will instruct the Original Purchaser to either return the defective part, or the entire appliance (if requested), to the Dealer or Hearthstone or allow a Dealer to make a service call at the place where the appliance is located. Hearthstone may require that a digital picture be provided to support the claim. Notwithstanding any other provision of this document, the Original Purchaser shall pay for any fees and service charges related to a Dealer's service call or the shipping charges associated with the return.

WARRANTY REGISTRATION

The Original Purchaser can complete their warranty registration on our website at www.hearthstonestoves.com, or send a completed and signed Warranty Registration Form, which is enclosed in the appliance document packet, to the following address:

Hearthstone Quality Home Heating Products, Inc.
Warranty Department
317 Stafford Avenue
Morrisville, VT 05661

NOTE: SENDING IN THE SIGNED WARRANTY REGISTRATION FORM IS *NOT REQUIRED* AS A CONDITION OF WARRANTY COVERAGE OR HEARTHSTONE'S PERFORMANCE.

APPENDIX 8: Photographs of test set up

Dilution picture Dia 8

Picture 1: Sampling system

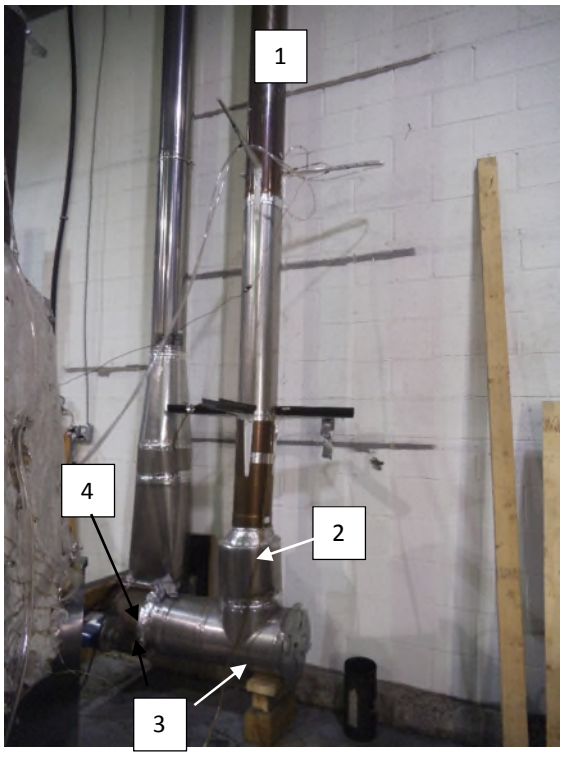

1 : 8 in dia Stainless steel pipe

2 : 16 in. Between sampling probe and lower elbow

3 : Air intake with damper to adjust flow rate

4 : Exhaust blower

Picture 2: Hood and mixing baffle

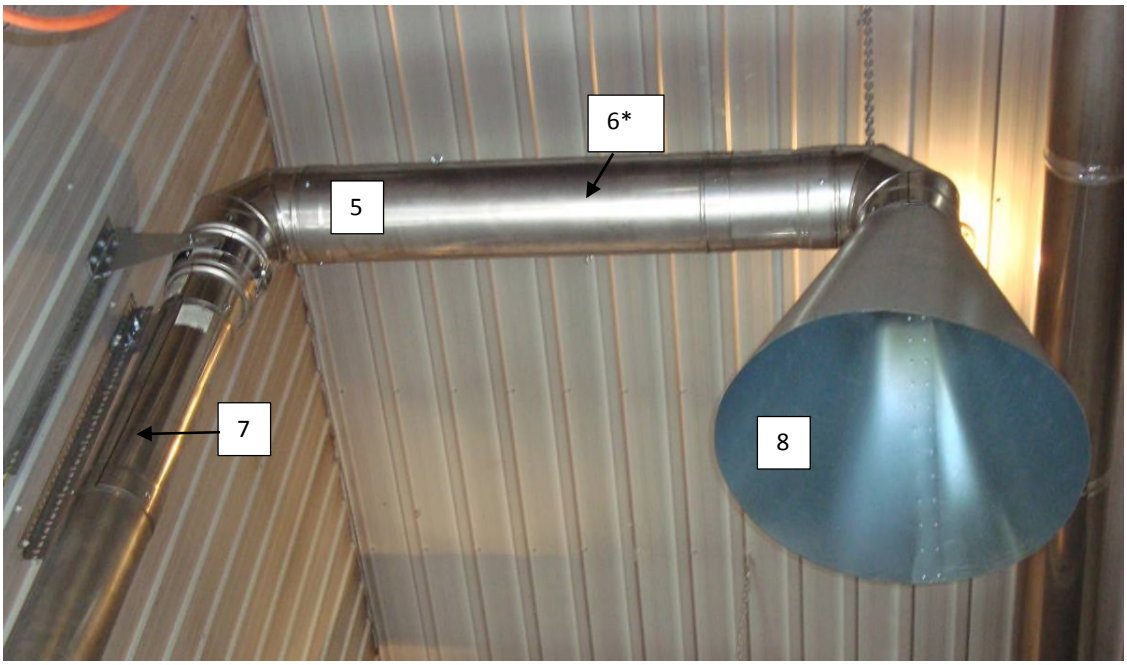

*The arrow point the deflectors inside of the pipe

5 : 8 in. dia. Stainless steel pipe

6 : Mixing baffle (2) location 1 foot between baffles

7 : 10 feet long between velocity port and upper elbow

8 : 48 in. dia. Galvanized steel smoke captures hood

Picture 3: Stack sampling

Picture 3.1: Gas analysis and temperature probe

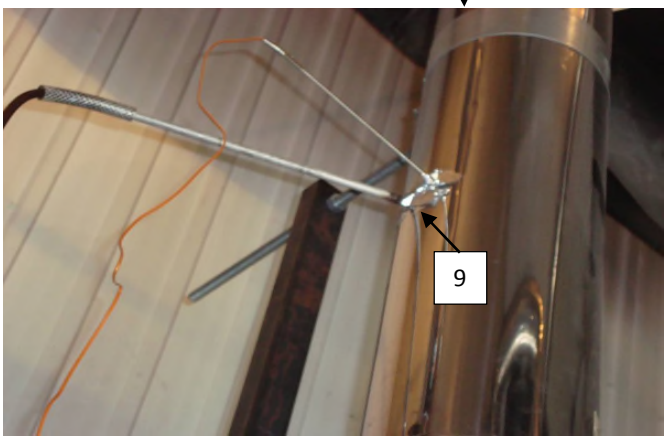

Picture 3.2: chimney support

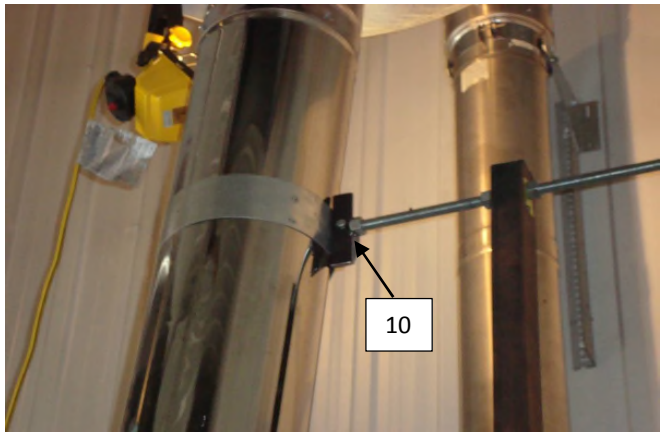

9 : Temperature and gas analyser sampling ports located 9 feet above platform

10 : Exhaust system support bracket

Picture 4: Tunnel flow measurement and sampling probe

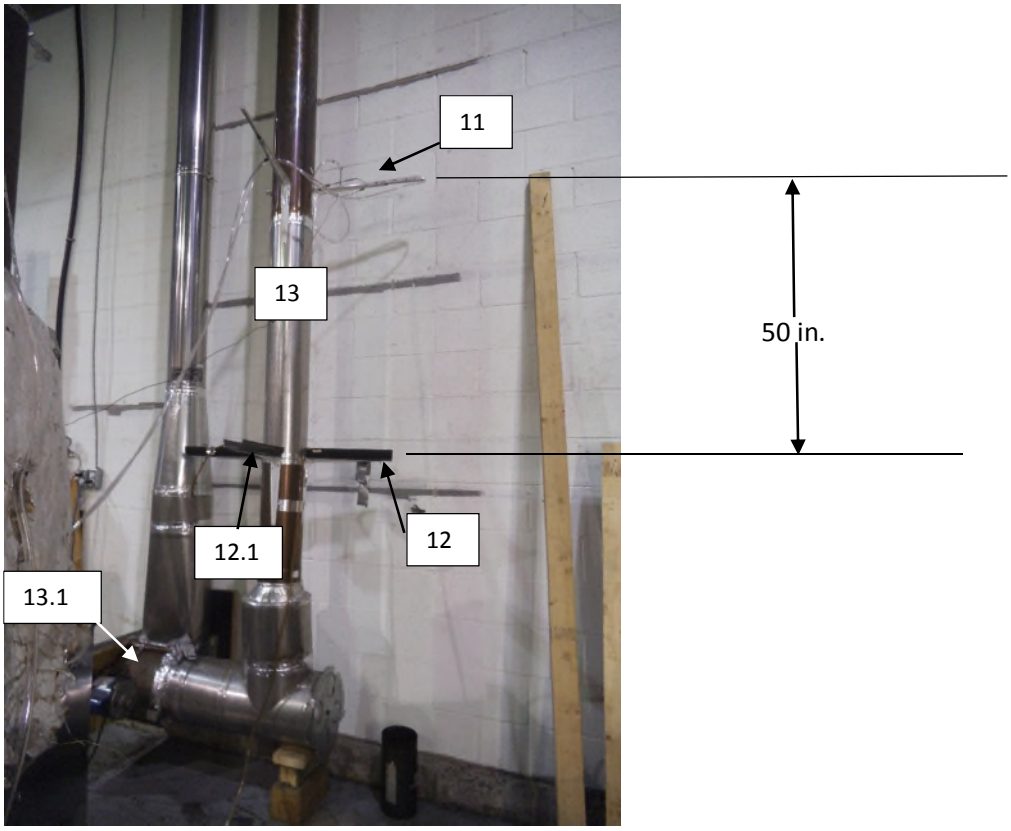

11 : Velocity port

12 :Sampling port, 2 sampling probes with 2x48 mm. dia.filter each. Filter used: Millipore AP4004700

12.1 :Sampling port, sampling probes with 2x48 mm. dia.filter each. Filter used: Millipore AP4004700, for first hour sampling

13 :18 feet long dilution tunnel

13.1 :Extraction blower

Picture 5: Draft sampling

14 : Draft sampling port located 6 in.from the flue outlet

Picture 6: Equipments

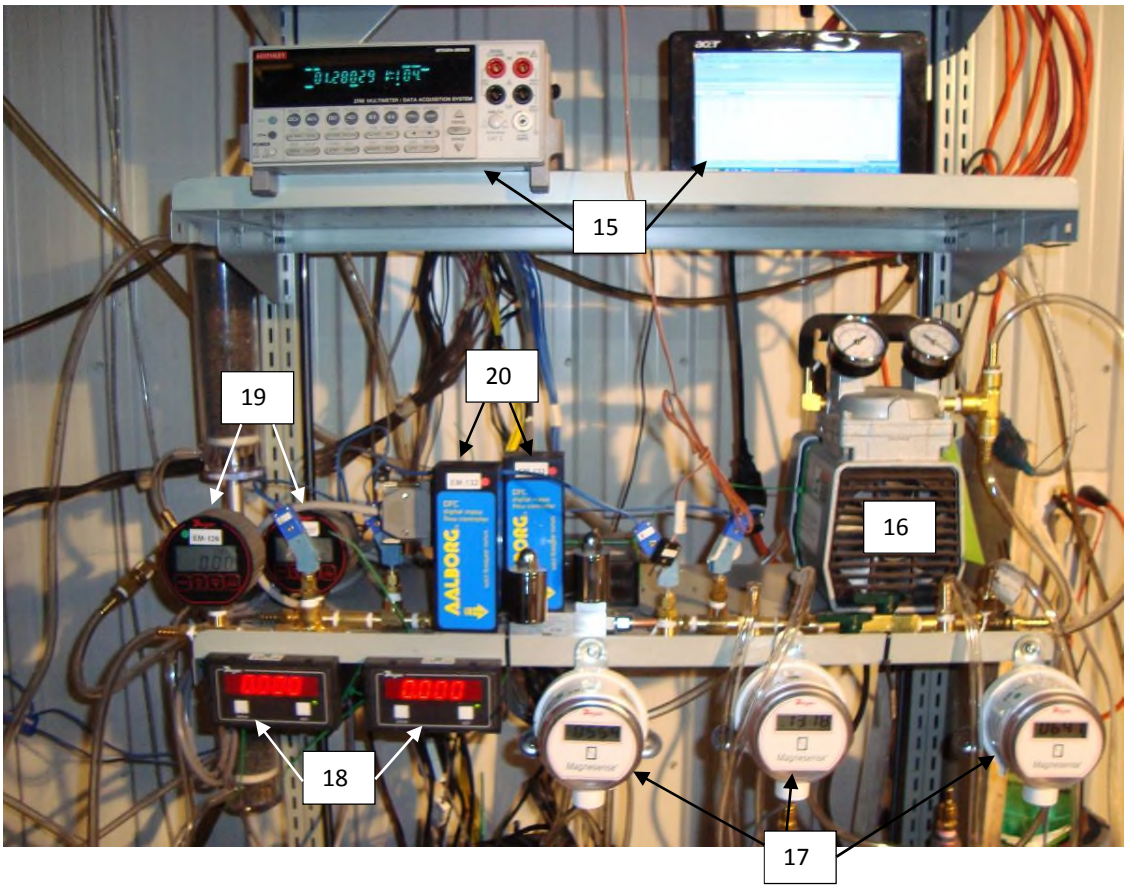

15	: Acquisition system
16	: Vacuum pump
17	: Digital manometer
18	: Digital read out for mass flow meter
19	: Digital vacuum gage
20	: Mass flow meter

Picture 7: Gaz analyser

Picture 8: Reference dry gas meter

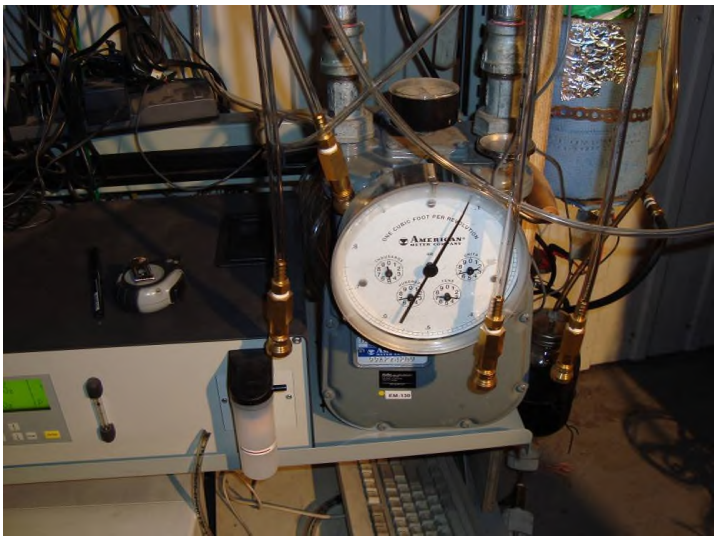

Picture 10: Water flow meter

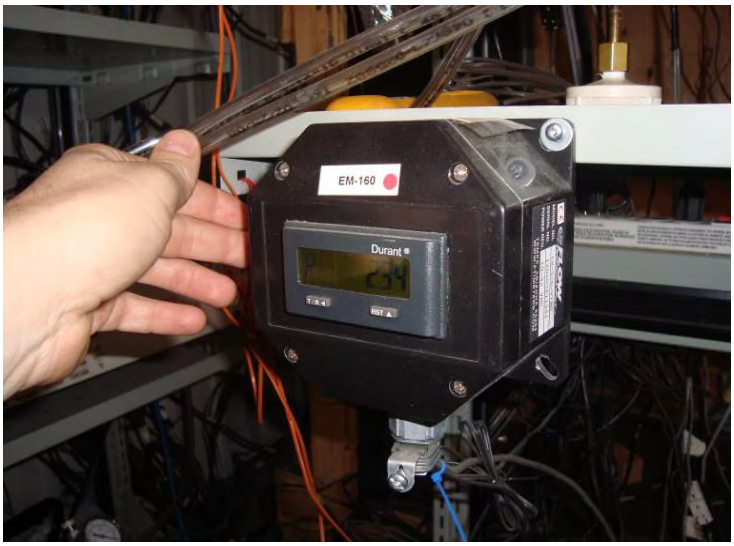

Picture 11: Dry gas meter

Picture 12 : Dilution tunnel sample system

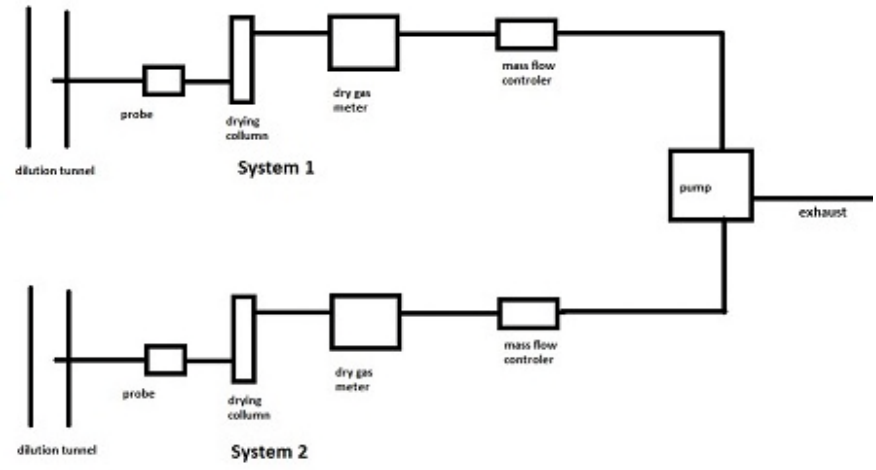

Picture 13: Dilution tunnel

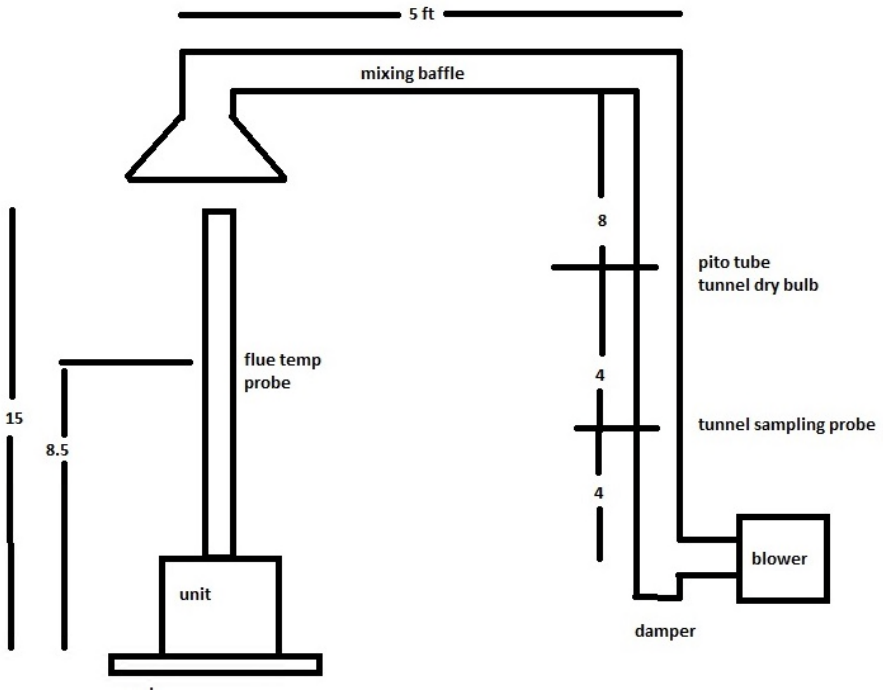

APPENDIX 9: Test load photographs

Run 1

GM 40 catalyst equivalency Januray 18th 2021 	GM 40 catalyst equivalency minimum output
GM 40 catalyst equivalency PI-20247-GM40 	

POLYTESTS
TESTING THROUGH YOUR REALITY

Run 2

GM 40 catalyst equivalency Januray 19th 2021 	GM 40 catalyst equivalency maximum output
GM 40 catalyst equivalency PI-20247-GM40 	

APPENDIX 10: Laboratory Operating Procedures

POLYTESTS Services inc.

SFBA EMISSIONS AND EFFICIENCY TESTING LABORATORY OPERATING PROCEDURE

INTRODUCTION

This document provides a step by step guide for the technician conducting tests to EPA standard requirements. Procedures outlined here, when followed, will result in tests in conformance with EPA Methods 28R, ASTME2780, ASTME2515, ASTM E2618, Method 28WHH, Method 28 PTS, Method ALT-125, ASMTE 3053.

The primary measurements to be made are particulate emissions rates. The technician's duties include the following steps.

1. Incoming inspection of test units.
2. Set-up of test units.
3. Preliminary testing to establish unit operating procedures and familiarity with operating controls.
4. Calibration of test equipment.
5. Set-up, checking and operation of sampling apparatus.
6. Conduct of tests including complete record keeping and data recording for non-automated functions.
7. Operation of hardware and software included in automatic data acquisition system.
8. Review and analysis of data at test completion to ensure test validity.

The technician running this test must be familiar with the following documents, which are to be kept in the laboratory at all, times.

EPA METHODS

1. EPA METHODS 28R
2. ASTME2780
3. ASTME2515
4. ASTM E2618
5. METHOD 28WHH
6. METHOD 28 PTS
7. ALT-125
8. ASMTE 3053

I. APPLIANCE INSPECTION AND SET-UP

A. INCOMING INSPECTION

1. Check for completeness of unit including parts, accessories, installation and operating instructions, drawings and specifications etc. Note any discrepancies or missing parts or information.
2. Check for shipping damage. If damage has occurred, notify the laboratory manager. In some cases, repairs may be made, provided the manufacturer and laboratory manager concur that repairs will not affect the unit's performance. If damage is irrepairable, a new unit will need to be obtained.
3. Note whether unit is catalytic of non-catalytic.
4. Mark unit with manufacturer's name, model number, work order number and date received.
5. If unit is safety listed, note label data including listing agency and serial number. If unit is not listed, mark all data sheets "UNLISTED". Test results will not be released until unit passes safety tests without modification unless authorized by laboratory manager.

B. UNIT SET-UP

1. All new units must be operated for a breaking in period as follows.

    a) Non-catalytic units: Ten (48) hours at medium burn rate with Douglas Fir scrap or cordwood.
    b) Catalytic units: Fifty (50) hours at medium burn rate with Douglas Fir scrap or cordwood.

    During these break-in runs the unit may be connected to a lab chimney and fuel additions noted into the corresponding data acquisition file. For catalytic units, a thermocouple must be installed in the catalyst.

    Record catalyst temperature at 1-hour intervals or on chart recorder. Operating should continue until data shows at least fifty (50) hours of operation with catalyst temperature in excess of 500 degrees Fahrenheit (active range).

    For non-catalytic units a stack thermocouple should be installed and stack temperature recorded at 1-hour intervals. Fourthy-height (48) hours minimum burn time with a stack temperature of at least 250 degrees Fahrenheit is required.

    Once break-in is completed, allow unit to cool. Clean unit thoroughly.

2. Unit is to be placed on scale for testing. Prior to proceeding with verification process, scale should be turned on and allowed to warm up for one (1) hour minimum. Zero scale and check calibration with standard weights. One (1) 1 kg weight and one (1) 2 kg weight are provided for this purpose. Use scale verification test form no. EPA-7-TP to record results. If scale fails to reproduce weights within tolerance, check with laboratory manager before proceeding.
3. If scale checks out, place unit on scale and align so chimney will be centered in hood.
4. Attach chimney connector and chimney. Be sure all joints are sealed below sampling points. Chimney and connector should be cleaned with a wire brush. Be sure chimney connector terminates and chimney starts at proper level above scale platform. Chimney must be supported from scale so that it does not touch test enclosure or hood walls.
5. Thermocouples should be attached to surfaces of unit prior to testing. EPA requires a thermocouple on the bottom of the firebox. This must be installed prior to putting the unit on the scale. In some cases, the required thermocouple locations will be inaccessible on finished units. These units should have thermocouples installed by the manufacturer during construction. Check with the laboratory manager if problems are encountered in proper thermocouple attachment.
6. Measure firebox dimensions and record on data forms nos. EPA-2-TP. Make a three-dimensional sketch of the firebox including firebrick, baffles and obstructions. Calculate firebox volume in cubic feet with both addition and subtraction methods using forms nos. EPA-3-TP and EPA-4-TP. See Section 6.2.4 of EPA Method 28 for details of firebox volume determination.
7. If unit is catalytically equipped, additional thermocouples must be installed upstream and downstream of catalyst. Thermocouples should also be placed in the primary and secondary combustion chambers of all units.
8. Plug thermocouples into data acquisition system jacks making a check of locations and jack numbers for each test on data form no. EPA-5-TP.
9. Note that inserts are tested as if they are freestanding stoves.
10. Dilution tunnel should be cleaned prior to each certification test series and at anytime a higher burn rate follows a lower test burn rate.

II. SAMPLING SYSTEM – SET-UP

A. GAS ANALYSIS

1. Instruments should be turned on and allowed to warm up for one (1) hour minimum.

2. Calibrate analyzers as follows:

NOTE : Prior to proceeding with calibration, make sure to use NIST tracable calibration gas bottles. Adjust flow meter if necessary at each instrument to required flow value.

a) Using span gas, adjust span control to values specified on calibration gas label.
b) Using nitrogene, adjust zero controls to provide a 0.00 analyzer readout.

c) Repeat a) and b) until no further adjustment is required.
d) Check readout vs. calibration gases (2) labels.

The CO_2 and CO analyzers are "ZEROED" on nitrogen. The O_2 analyzer is spanned on air and set for 20.9%. It is zeroed on nitrogen as well.

3. Check for response time synchronization.

a) With no fire in unit, allow reading to stabilize (O_2 should be 20.93, CO and CO_2 should equal O).
b) Flow the calibration gas in the unit and start stop watch. Note the time required for each unit to reach .90 of the calibration gas bottle value. If all three analyzers reach this value within 15 seconds of each other, synchronization is adequate. If not, contact the laboratory manager. Synchronization is adjusted by internal instrument setting.

4. Set-up sample clean-up and water collection train as follows.

a) Load impingers as follows:
Impinger #1: 100 ml distilled water and 5 ml H_2SO_4
Impinger #2: 100 ml distilled water and 5 ml H_2SO_4
Impinger #3: Empty
Impinger #4: 200 – 300 grams silica gel (dry)

b) Place impingers in container and connect with "U TUBES". Grease carefully on bottom half of ball joint so that grease will not get into tubes.

c) Connect filter to first impinger and sample line to last impinger.

e. Leak check system as follows.

1) Plug probe.
2) Turn on sample system.
3) Observe sample flow rotometer and vacuum gauge. If necessary, use vacuum; adjust valve to set vacuum to the maximum inches Hg.
4) If the float in rotometer does not stabilize below 10 on scale, system must be resealed.
5) Repeat leak check procedure until satisfactory results are obtained.

f) Just prior to starting test, fill impinger container with water and ice and record ambiant conditions on data form no. EPA-8-TP.

B. DILUTION TUNNEL SAMPLE TRAIN SET-UP

1. Filters and holders.

a) Clean probes and filter holder front housings carefully and desiccate for at least 24 hours prior to use.

b) Filters should be numbered and filter and probe combinations labeled prior to use.

c) Weigh desiccated filters and probe-filter units on analytical balance. Record weights data form no. EPA-10-TP. Note that probe and front half of front filter are to be weighed as a unit.

d) Carefully assemble filter holder units and connect to sampling systems. Check "DRIERITE" columns for adequate dry absorbent (blue).

2. Leak checking.

a) Each sample system is to be checked for leakage prior to inserting probes in tunnel.

b) Plug probes and start samplers, adjust pump bypass valve to produce a vacuum reading of 5 inches Hg. (NOTE: During test, vacuum must not exceed 5 inches unless posttest leak check shows acceptable results.)

c) Allow vacuum indication to stabilize for two (2) minutes, then record time and dry gas (DGM_1) and (DGM_2) meter readings. Wait ten (10) minutes and record dry gas meter readings again (DGM_3, DGM_4). NOTE: If mark, system is leaking too much and all seals should be checked.

d) Calculate leakage rate as follows.

1) System 1: $\frac{(DGM_3 - DGM_1)}{10} = CFM_1$

2) System 2: $\frac{(DGM_4 - DGM_2)}{10} = CFM_2$

If CFM_1 or CFM_2 is greater than .02 CFM, leakage is unacceptable and system must be resealed.

If CFM_1 or CFM_2 is greater than 0.04 X sample rate, leakage is unacceptable. For most tests, the sample rate will be about 0.15 CFM, thus leakage rates in excess of 0.04 X 0.15 = 0.006 CFM are not acceptable. Record leakage rates on form no. EPA-5-TP

e) Once leakage check is satisfactory, unplug probe and set flow to appropriate rate for test. This should be done in the minimum amount of time necessary and with the probes in ambient air. Do not insert probes in tunnel until the start of the test run. When flow is established, replug probes to prevent contamination.

III. TEST CONDUCT

A. FUEL LOAD

1. Determine optimum load weight by multiplying firebox volume in cubic feet by 7 or (10 and 12 for cordwood method). This is the load weight on an as-fired basis.
2. Determine piece size to obtain the requested load configuration and meet the test load weight criteria. The load should consist of the following: **TO BE DETERMINED**
3. Weigh out test load and adjust weight by shortening all pieces equally if necessary. Record individual piece load on form no. EPA-11-TP.

4. Measure and record moisture content of each fuel piece using Delmhorst moisture meter. Determine if fuel load moisture content is in required range. If not, construct new load using wood with required moisture content. All wood in the humidity chamber should be within range. Contact project manager if you cannot find suitable pieces. Record moisture of each individual piece load on form no. EPA-11-TP.

B. UNIT START-UP

1. Before lighting a fire, turn on dilution tunnel and set tunnel velocity to 500ft/min Record readings on data form no. EPA-9-TP.
2. Check draft imposed on cold stove with all inlets closed and a draft gauge in the chimney. If draft is greater than 0.005 inches water column, adjust tunnel to stack gap until draft is less than 0.005.
3. Check for ambient airflow around unit with hot wire anomometer. Must be less than 50 ft/min.
4. Check all equipment for proper operation. Analyzers should be on and in sample mode. Computer should be loaded with test program and awaiting test start command.
5. Zero scale and start fire with uncolored newspaper and kindling representing 10 % of test load with the same type of fuel.
6. Once kindling is burning well after 5 minutes, add splitted pieces having a bottom surface around 4 sq. inches and representing 25% of test load weight. Operate at high fire for 15 minutes. Then adjust settings to intended test run levels as per the manufacturer's.
7. Following addition of pretest fuel load (splitted pieces), start computer for data logging.
8. All fuel additions, air intake settings and operational characteristics shall be noted with associated time stamp on form no. EPA-1-TP.

C. TEST RUN

1. Once the targeted test fuel bed weight is obtained, the test is to be started as follows:

   a) Insert the sample probes into the tunnel being careful not to hit sides of tunnel with probe tip.
   b) Check tunnel pitot tube for proper position. (Pitot should be carefully cleaned prior to each test.)
   c) Turn on probe sample systems and stack sampler.
   d) Open stove door, rake coals and load stove as follows: **TO BE DETERMINED**
   e) Close door or follow manufacturer's start-up procedures. (Five (5) minutes maximum time before all doors and controls must be set to final positions for duration of test. 15 minutes allowed for ALT-125 method))
   f) An alarm will sound an audible signal at the (10) minutes intervals. This signal a reading interval. You must verify at each interval that the following readings are correctly logged by the data acquisition system and make observations of any unusual or non-routine events that could occur.

      1) Rotometer readings.
      2) Tunnel pitot tube reading.
      (Zero regularly between readings)
      3) Gas meter readings.
      4) Temperature readings.
      5) Draft reading
      6) Test laod weight
      7) CO, CO_2 and O_2 readings
      8) Observations of any unusual or non-routine events.

   g) During the test, any condition approaching unacceptable limits will be noted. The filter probes and housings are installed in small holders just outside the tunnel. If the filter temperature gets too high, you will have to increase the water flow through the cooling unit until acceptable temperatures are obtained. In between readings, check on other equipment. Be sure dryers and filters are working and monitor impinger train for proper water and ice levels etc.

   h) When the fuel charge is consumed, it will signal end of test and shut down the sampling systems. When this occurs,

remove filter holder and probes from tunnel and impingers from sample line.

IV. POST TEST PROCEDURES

A. SAMPLE RECOVERY – FILTER TRAINS

1. Carefully clean outside of probes and filter housings with alcohol.
2. Disassemble filter holder and transfer filters to clean petri dish. Scrape gasket with scalpel and collect any loose material on filters.
3. Place probe and front half of first filter holders (still assembled) and filters in desiccator. Allow 24-hour desiccation before weighing.
4. Weigh probe filter holder units and filters at six (6) hour intervals until weight change between weighings is less than 0.2 mg. Record all weights taken on data form no. EPA-10-TP.

B. CALCULATION OF RESULTS

The computer program carries out all final calculations. When run, it will ask for data from forms used during the test. Enter data as called for.

GENERAL

This guide cannot cover every possible contingency, which may develop during a particular test program. Many questions, which may arise, can be answered by a complete understanding of the test standards and their intent. When in doubt on any detail, check with the laboratory manager and be sure you understand the procedures involved.

It is critical that all spaces on the data forms be properly filled in. Each test must be represented by a complete record of what was done and when.

APPENDIX 11: Sample calculations

Validation du fichier de calcul avec les équations provenant des normes:
ASTM E2515-11
ASTME2618

Dry burn rate (BR)

Equation used

B415.1, 13.4

$$BR = \left[\frac{60W_{WD}}{\theta}\right]\left[\frac{100 - \%M_W}{100}\right]$$

Nomenclature

BR	Dry wood burn rate, kg/hr (lb/hr)
W_{WD}	Total mass of wood burned (wet basis) during the test run, kg (lb)
θ	Total time of test run, minutes
$\%M_W$	Average moisture in test fuel charge, wet basis, %
	To convert from dry basis to wet basis: % moisture wet basis =

Sample calculation

Data

W_{WD}	9,76	lbs
θ	98	min
$\%M_W$	17,43	%

Calculation

BR	2,239	Dry kg/hr

Volume of gas sample corrected to dry standard conditions ($V_{m(std)}$)

Equation used

ASTM 2515, equation 6

$$V_{m\,(std)} = K_1 V_m Y \left[\frac{P_{bar} + \left(\frac{\Delta H}{13.6}\right)}{T_m} \right]$$

Nomenclature

$V_{m\,(std)}$	Volume of gas sample , corrected to standard conditions, $dscm^3$ (dscf)
K_1	17.64 R/in Hg
V_m	Volume of gas sample
Y	DGM calibration factor
P_{bar}	Barometric pressure mmHg (in Hg)
ΔH	Average pressure at the outlet of the dry gas meter mm water (in. Water)
T_m	Absolute average dry gas meter temperature K (R)

Sample calculation

Data

V_m	18,61	dcf
Y	1,00136	
P_{bar}	29,87	in Hg
ΔH	-0,7820	in Hg
T_m	534,6	R

Calculation

$V_{m(std)}$	17,89	dscf

Total amount of particulate matter collected (m_n)

Equation used

ASTM 2515, equation 12

$$m_n = F_1 + F_2 + \Delta PF$$

Nomenclature

m_n	Total amount of particulate matter collected, mg
F_1	Particulate matter collected on front filter, mg
F_2	Particulate matter collected on second filter, mg
ΔPF	Post-test weight gain of probe and filter holder assembly, mg

Sample calculation

Data

F_1	0,0011	g
F_2	0,000	g
ΔPF	0,001	g

Calculation

m_n	1,800	mg

Calculation based of train 2 data

Particulate concentration (C_S)

Equation used

ASTM 2515, equation 13

$$C_S = (0{,}001\ g/mg) \times \left(\frac{m_n}{V_{m\,(std)}}\right)$$

Nomenclature

C_S	Concentration of particulate matter in stack gas or dilution tunnel, dry basis, corrected to standard conditions, g/dsm^3 (g/dscf)
m_n	Total amount of particulate matter collected in the sampling train, mg
$V_{m(std)}$	Volume of gas sample measured corrected to dry standard conditions, dsm^3 (dscf)

Sample calculation

Data

m_n	1,800	mg
$V_{m(std)}$	17,89	dscf

Calculation

C_s	0,000101	g/dscf

Calculation based of train 2 data

Particulate concentration for room air (C_r)

Equation used

ASTM 2515, equation 14

$$C_r = (0{,}001\ g/mg) \times \left(\frac{m_r}{V_{mr\,(std)}}\right)$$

Nomenclature

C_r	Concentration of particulate matter in room air, dry basis, corrected to standard conditions, g/dsm^3 (g/dscf)
m_r	Total amount of particulate matter collected in the sampling train, mg
$V_{mr(std)}$	Volume of room air sample measured corrected to dry standard conditions, dsm^3 (dsc

Sample calculation

Data

m_r	0,100	mg
$V_{mr(std)}$	17,26	dscf

Calculation

C_r	0,000006	g/dscf

Calculation based of train 2 data

Adjustment factor for alternative pitot tube placement (FP)

Equation used

ASTM 2515, equation 1

$$F_P = \frac{V_{strav}}{V_{scent}}$$

Nomenclature

V_{strav}	Average gas velocity caclulated after the Pitot tube traverse
V_{scent}	Average gas velocity at the center of the dilution tunnel cacluated after the multi-point Pitot traverse
F_P	Adjustment factor for center of tunnel pitot tube placement

Sample calculation

Data

V_{strav}	0,260693951
V_{scent}	0,273861279

Calculation

F_P	0,951920

Average dilution tunnel gas velocity (V_S)

Equation used

ASTM 2515, equation 9

$$V_S = F_p K_P C_P \left(\sqrt{\Delta P}\right)_{avg} \sqrt{\frac{T_S}{P_S M_S}}$$

Nomenclature

V_S	Average dilution tunnel gas velocity, m/s (ft/s)
K_P	Pitot tube constant For the metric units: $34.97\ m/sec \left[\frac{\left(\frac{g}{g-mole}\right)(mm\ Hg)}{(°K)(mm\ H_2O)}\right]^{1/2}$ For English units: $85.49\ ft/sec \left[\frac{\left(\frac{lb}{lb-mole}\right)(in\ Hg)}{(°R)(in\ H_2O)}\right]^{1/2}$
C_P	Pitot tube coefficient (use 0.99 for standard pitot tube, 0.84 may be used for S-type tubes constructed according to Method 2 specifications)
F_P	Pitot tube correction factor
$\left(\sqrt{\Delta P}\right)_{avg}$	Average square root of each individual velocity head (ΔP)
P_{bar}	Barometric pressure at measurement site, mm H_2O (in. H_2O)
P_g	Stack static pressure, mm Hg (in. Hg)
P_S	Absolute dilution tunnel static gas pressure, mm Hg (in. Hg), or $P_{bar} + P_g$
M_S	Molecular weight of dilution tunnel gas, wet basis, g/g-mole (lb/lb-mol) may be assumed to be 28.78 or 29 for CSA B415
t_S	Dilution tunnel temperature, °C (°F)
T_S	Absolute dilution tunnel temperature, °K (°R), or 273 + t_s for metric units, 460 + t_s for English units

Sample calculation

Data

K_P	85,49	
C_P	0,99	
F_P	0,952	
$\left(\sqrt{\Delta P}\right)_{avg}$	0,2725	in $H_20^{1/2}$
P_{bar}	29,87	in Hg
P_g	0,27	in H_20
P_S	29,89	in Hg
M_S	29	lb/lb-mol
t_S	101,43	F
T_S	561,43	R

Calculation

V_S	17,6698	ft/s

Average dilution tunnel gas flow rate (Qstd)

Equation used

ASTM 2515, equation 3

$$Q_{std} = 60(1 - B_{WS})V_S A \left(\frac{T_{std}}{T_S}\right)\left(\frac{P_S}{P_{std}}\right)$$

Nomenclature

Q_{std}	Total gas flow rate corrected to dry standard conditions, dsm^3/min (dscf/min)
60	Conversion factor minutes per hour
B_{WS}	Water vapour in the dilution tunnel stream, proportion by volume (may be assumed to be 2%)
V_S	Average dilution tunnel gas velocity, m/s (ft/s)
A	Cross-sectional area of dilution tunnel, m^2 (ft^2)
T_{std}	Standard absolute temperature, 293 °K (528°R)
T_S	Absolute average dilution tunnel temperature, °K (°R), or 273 + t_s for metric units, 460 + t_s for English units
t_S	Dilution tunnel temperature, °C (°F)
P_S	Absolute dilution tunnel static gas pressure, mm Hg (in. Hg), or P_{bar} + P_g
P_{bar}	Barometric pressure at measurement site, mm Hg (in. Hg)
P_g	Dilution tunnel static pressure, mm Hg (in. Hg)
P_{std}	Standard absolute pressure, 760 mm Hg (29.92 in. Hg)

Sample calculation

Data

B_{WS}	0,02	
V_S	17,670	
A	0,349	ft^2
T_{std}	528	R
T_S	561,43	R
P_S	29,890	in Hg
P_{std}	29,92	in Hg

Calculation

Q_{std}	340,73	dscf/min

Particulate emission rate (E)

Equation used

$$E = (C_S - C_r)Q_{std}$$

Nomenclature

E	Particulate emission rate, g/hr
C_S	Concentration of particulate matter in stack gas or dilution tunnel gas, dry basis corrected to standard conditions, g/dscm^3 (g/dscf)
C_r	Concentration of particulate matter in room air, g/dscm^3 (g/dscf)
Q_{std}	Total gas flow rate, dry basis corrected to standard conditions, dsm^3/min (dscf/min)

Sample calculation

Data

C_S	0,000101	g/dscf
C_r	0,000006	g/dscf
Q_{std}	340,73	dscf/min

Calculation

E	0,03	g/min
E	1,94	g/h

Calculation based on train 2 data.

Total particulate emission rate (E_T)

Equation used

ASTM 2515, equation 15

$$E_T = (C_S - C_r)Q_{std}\theta$$

Nomenclature

E_T	Total particulate emission, g
C_S	Concentration of particulate matter in stack gas or dilution tunnel gas, dry basis corrected to standard conditions, g/dscm^3 (g/dscf)
C_r	Concentration of particulate matter in room air, g/dscm^3 (g/dscf)
Q_{std}	Total gas flow rate, dry basis corrected to standard conditions, dsm^3/min (dscf/min)
θ	Total sampling time, min

Sample calculation

Data

C_S	0,000101	g/dscf
C_r	0,000006	g/dscf
Q_{std}	340,73	dscf/min
θ	98	min

Calculation

E	3,17	g

Calculation based on train 2 data.

Average gas velocity in dilution tunnel during each min interval, i, of the test run

Equation used

ASTM 2515, equation 10

$$v_{si} = F_p K_p C_p \sqrt{\Delta p_i} \sqrt{\frac{T_{si}}{P_s M_s}}$$

Nomenclature

v_{si}	Average gas velocity in dilution tunnel during each min interval, i of the test run m/sec (ft/sec)
F_P	Pitot tube correction factor
K_P	Pitot tube constant For the metric units: $34.97\ m/sec \left[\frac{\left(\frac{g}{g-mole}\right)(mm\ Hg)}{(°K)(mm\ H_2O)}\right]^{1/2}$ For English units: $85.49\ ft/sec \left[\frac{\left(\frac{lb}{lb-mole}\right)(in\ Hg)}{(°R)(in\ H_2O)}\right]^{1/2}$
C_P	Pitot tube coefficient (use 0.99 for standard pitot tube, 0.84 may be used for S-type tubes constructed according to Method 2 specifications)
Δp_i	interval, i, of the test run
T_{Si}	Absolute average gas temperature in the dilution tunnel during the ith minutes
P_S	Absolute dilution tunnel static gas pressure, mm Hg (in. Hg), or $P_{bar} + P_g$
M_S	Molecular weight of dilution tunnel gas, wet basis, g/g-mole (lb/lb-mol) may be assumed to be 28.78

Sample calculation

Data

i=1			**i=2**		
F_P	0,952		F_P	0,952	
K_P	85,49		K_P	85,49	
C_P	0,99		C_P	0,99	
Δp_i	0,069	in H_20	Δp_i	0,073	in H_20
T_{Si}	565,4	R	T_{Si}	562,9	R
P_S	29,89	in Hg	P_S	29,89	in Hg
M_S	29	lb/lb-mol	M_S	29	lb/lb-mol

Calculation

i=1			**i=2**		
v_{si}	17,09	ft/sec	v_{si}	17,54	ft/sec

Percent of proportional sampling rate (PR)

Equation used

B415, equation 13.1

$$PR = \left(\frac{\theta V_{mi(std)} V_S T_m T_{Si}}{\theta_i V_m V_{Si} T_{mi} T_S}\right) \times 100$$

Nomenclature

PR	Percent of proportional sampling rate (%)
θ	Total sampling time, min
θ_i	Time of interval, 1 min
V_m	Volume of gas sample measured by the DGM, dsm^3 (dscf)
$V_{mi(std)}$	Volume of gas sample measured by the digital mass flow controller during the ith 1 minutes interval, dsm^3 (dscf)
V_S	Average gas velocity in the dilution tunnel, ft/min
V_{Si}	Average gas velocity in the dilution tunnel during the ith 10 minutes interval, ft/min
T_m	Absolute average digital mass flow controller temperature, K (R)
T_{mi}	Absolute average digital mass flow controller temperature during the ith 1 minutes
T_S	Absolute average gas temperature in the dilution tunnel, K (R)
T_{Si}	Absolute average gas temperature in the dilution tunnel during the ith 1 minutes

Sample calculation

Data

train =1			train =2		
θ	98	min	θ	98	min
θ_i	1	min	θ_i	1	min
V_m	18,05	dcf	V_m	17,89	dcf
$V_{mi(std)}$	0,183	cuft	$V_{mi(std)}$	0,1827	cuft
V_S	17,68	ft/sec	V_S	17,68	ft/sec
V_{Si}	17,097	ft/sec	V_{Si}	17,097	ft/sec
T_m	531,7	R	T_m	534,6	R
T_{mi}	530,45	R	T_{mi}	530,13	R
T_S	561,43	R	T_S	561,43	R
T_{Si}	565,4	R	T_{Si}	565,4	R

Calculation

train=1		**train=2**	
PR	103,5 %	PR	105,1 %

Filter face velocity check

Equation used

$$FV_{max} = \frac{V_{mL}}{1} \times \frac{1}{F_A}$$

Nomenclature

FV_{max}	Maximum filter face velocity during the test run, m/min (ft/min)
V_{mL}	Largest 1 minute interval metered gas volume value recorded during the test run, dm^3 (dcf)
F_A	Filter area exposed to gas sample during train operation, m2 (ft^2)

Sample calculation

Data

V_{mL}	0,182	dcf
F_A	0,0116	ft^2

Calculation

FV_{max}	15,66	ft/min

Dual train precision

Equation used

$$\frac{Train\ 1 - average\ train\ 1\ and\ train\ 2}{average\ train\ 1\ and\ train\ 2} \times 100 \leq 7.5\%$$

Nomenclature

Dual train precision	Deviation between emission's train 1 and 2
Train 1	Total emission for train 1
Train 2	Total emission for train 2

Sample calculation

Data

Train 1	3,32	g
Train 2	3,17	g

Calculation

Dual train precision	2,39	%

Analyzer drift checks

Equation used

$$Drift = \frac{\Delta R}{span} \times 100$$

Nomenclature

Drift	The change in analyzer response to calibration gas over the duration of the test run
ΔR	The difference between the analyzer response at the end of the test run and the
Span	The upper limit of the instrument range, ppmv or %

Sample calculation

Data

ΔR	0,015	%
Span	5	%

Calculation

Drift	0,30	%

Calculated with CO concentration values.

APPENDIX 12: Volume calculations

hearthstone

Model: GM40

Date: 4/20/2017

Test Engineer: JWHITE

Firebox Volume and Fuel Load Calculation

Firebox Volume Sketch

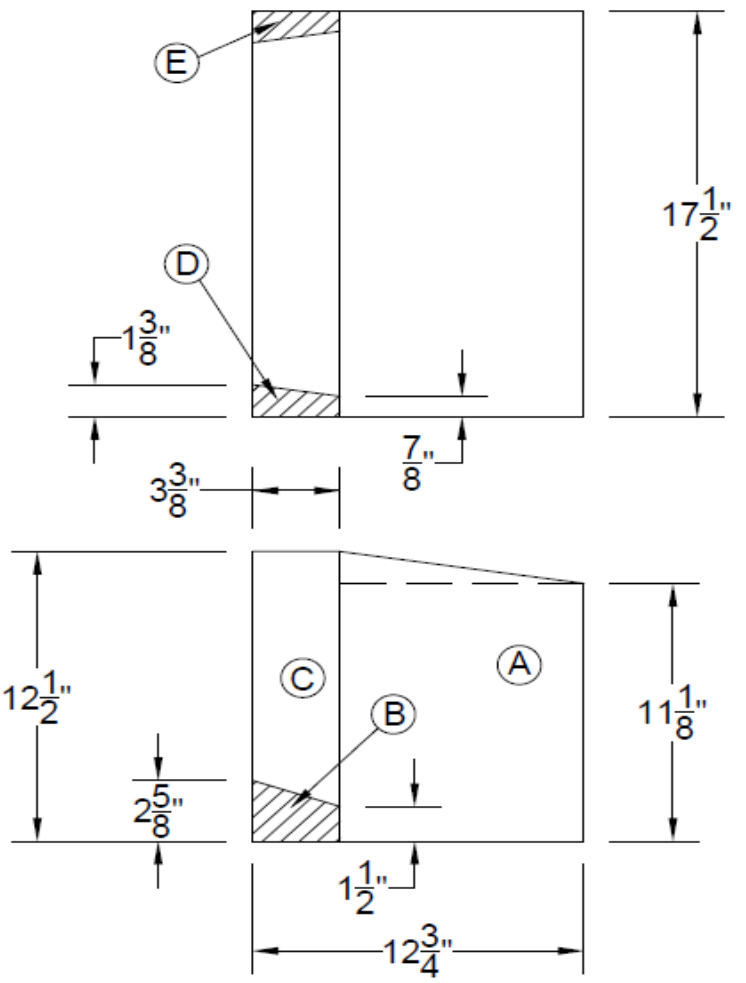

NOT TO SCALE

Area	Add/Subtract (+/-)	Height (in)	Width (in)	Length (in)	Volume (cuft)
A	+	11.8125	9.375	17.5	1.1215
B	-	2.0625	3.375	17.5	-0.0705
C	+	10.4375	3.375	15.25	0.3109
D	-	10.4375	3.375	1.125	-0.0229
E	-	10.4375	3.375	1.125	-0.0229
F					0.0000
G					0.0000
H					0.0000
I					0.0000
J					0.0000

	Test Fuel Load (lbs)		
Total Firebox Volume (cuft)	Lower (lbs)	Ideal (lbs)	Upper (lbs)
1.3160	8.29	9.21	10.13

Crib Construction	2 X 4

Firebox Length:	17.50	in
Door Opening Width	14.75	in
Nominal Test Fuel Piece Length (5/6 of Firebox Length):	14.58	in
Actual Piece Length Used:	14.50	in

APPENDIX 13: Operating instruction

hearthstone

Wood Stove Operating Instructions

Model: 8392

Date: 12/1/2020

Test Engineer: S Booth

Burn Rate Category	Kindling	Pre-burn Load	Test Load	Pre-Burn Start	Air Setting	Fan Setting	Coal Bed	Test Start
Low 0.80-0.95 kg/hr typ.	*2.5 lbs of kindling *Burn to 0.8-1.0 lbs before adding pre-burn	*14 ea- 2"x4"x8" (Leave door cracked for 5 min to insure preload ignition) *Close bypass @10 lbs fuel weight	*5 ea - 2"x4" 13.5" to 14.5" long *16 ea - spacers *low-avg-high (lbs) 8.29 - 9.21 - 10.13 (lbs)	3.7 lbs up from top of coal bed range *~500 °F stove temp	.065" (CLOSED)	ON - Pre-Burn (low) ON - Test (low) Note: fan will start automatically from thermostat	Rake coal bed 1-2 minutes before test start. Ensure clear path for lower primary.	*420 °F stove temp *600 °F CAT temp *Close door and bypass after loading *Primary full open for first 5 minutes.
High 1.76-2.00 kg/hr typ.	*2.5 lbs of kindling *Burn to 0.8-1.0 lbs before adding pre-burn	*14 ea- 2"x4"x8" (Leave door cracked for 5 min to insure preload ignition) *Close bypass @10 lbs fuel weight	*5 ea - 2"x4" 13.5" to 14.5" long *16 ea - spacers *low-avg-high (lbs) 8.29 - 9.21 - 10.13 (lbs)	Start Pre-Burn immediately after loading stove.	FULL OPEN	ON - Pre-Burn (low) ON - Test (low) Note: fan will start automatically from thermostat	Rake coal bed 1-2 minutes before test start. Ensure clear path for lower primary.	*550°F stove temp *800 °F CAT temp *Close door and bypass after loading *Primary stays at full open setting

Typical Pre-Burn Load	Typical Test Load	Additional Instructions
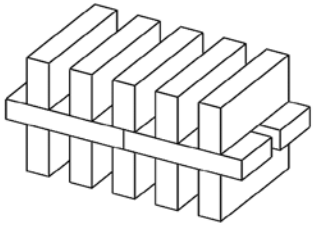	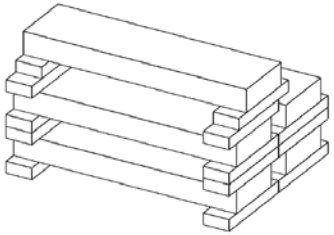	

APPENDIX 14: Drawing Air flow pattern

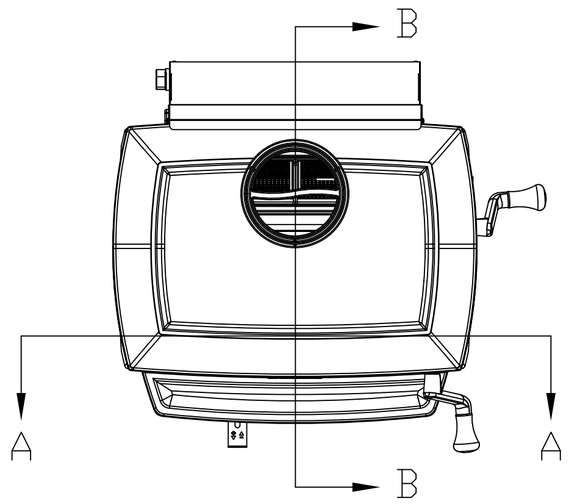

INLET

OUTLET

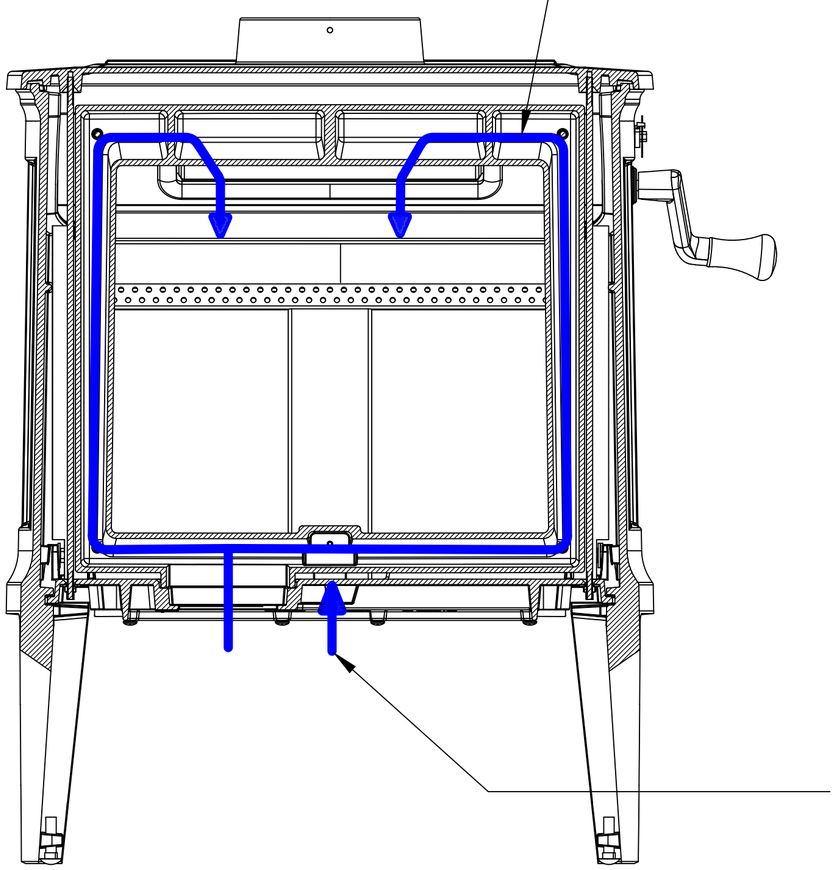

SECTION A

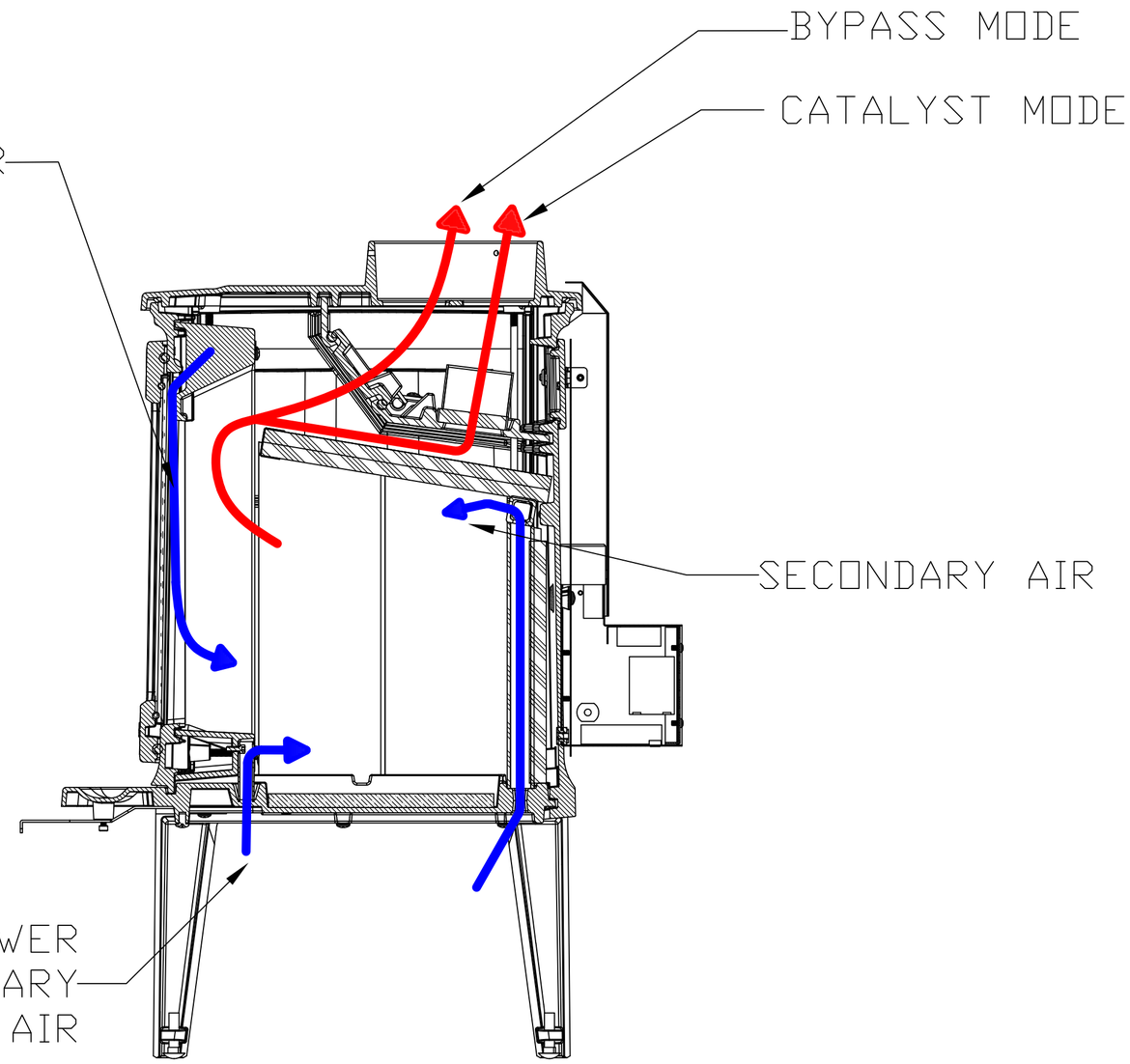

SECTION B

VIEWS ARE THIRD ANGLE

REVISIONS				
ECO	REV.	DESCRIPTION	DATE	APPROVED

This document submitted by HearthStone is the property of HearthStone and may contain information of a proprietary nature and shall not be copied or duplicated in whole or in part or used in whole or in part for any purpose other than that which is necessary for the preparation of bids or fabrication. Please return to HearthStone.

UNLESS OTHERWISE SPECIFIED TOLERANCES ARE:

FRACTIONS	DECIMALS	ANGLES
± 1/64	.XX ± .015	± 1/4°
	.XXX ± .005	

1.) DIMENSIONS ARE IN INCHES / MM
2.) ALL MACHINED SURFACES TO BE DE-BURRED AND SMOOTHED

MATERIAL: NA

FINISH: NA

CAD GENERATED DRAWING, DO NOT MANUALLY UPDATE

APPROVALS	DATE
DRAWN	6/12/2017
CHECKED	
RESP ENG	
MFG ENG	
QUAL ENG	

hearthstone

GM40

EPA AIR FLOW

SIZE C | HEARTHSTONE DWG. NO. 8640 | REV. 0

SCALE: 1:1 | HERGEM DWG. NO. | SHEET 1 OF 1

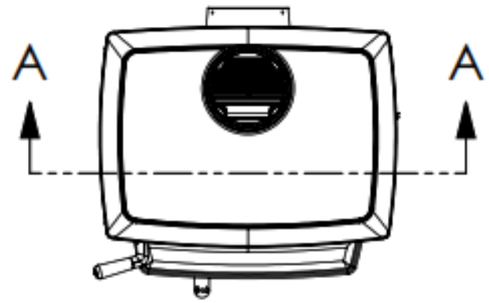

INLET

OUTLET

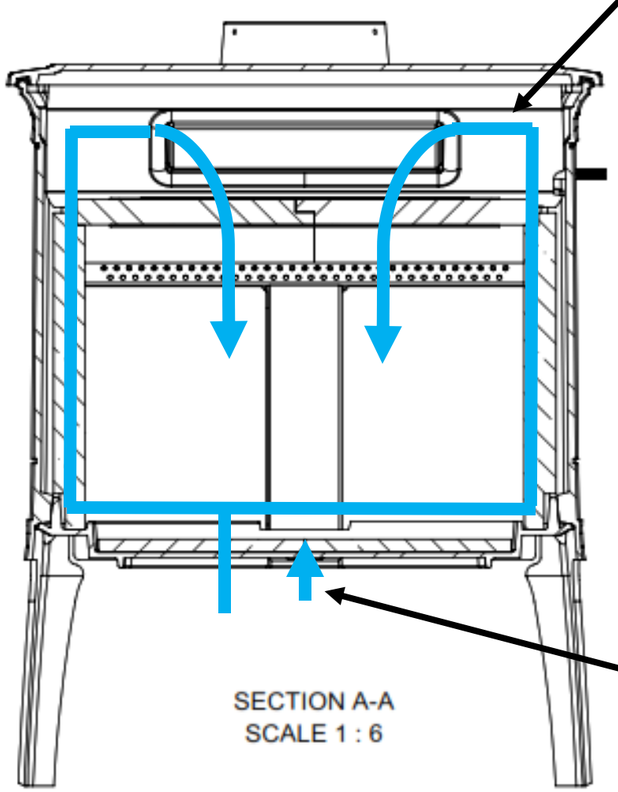

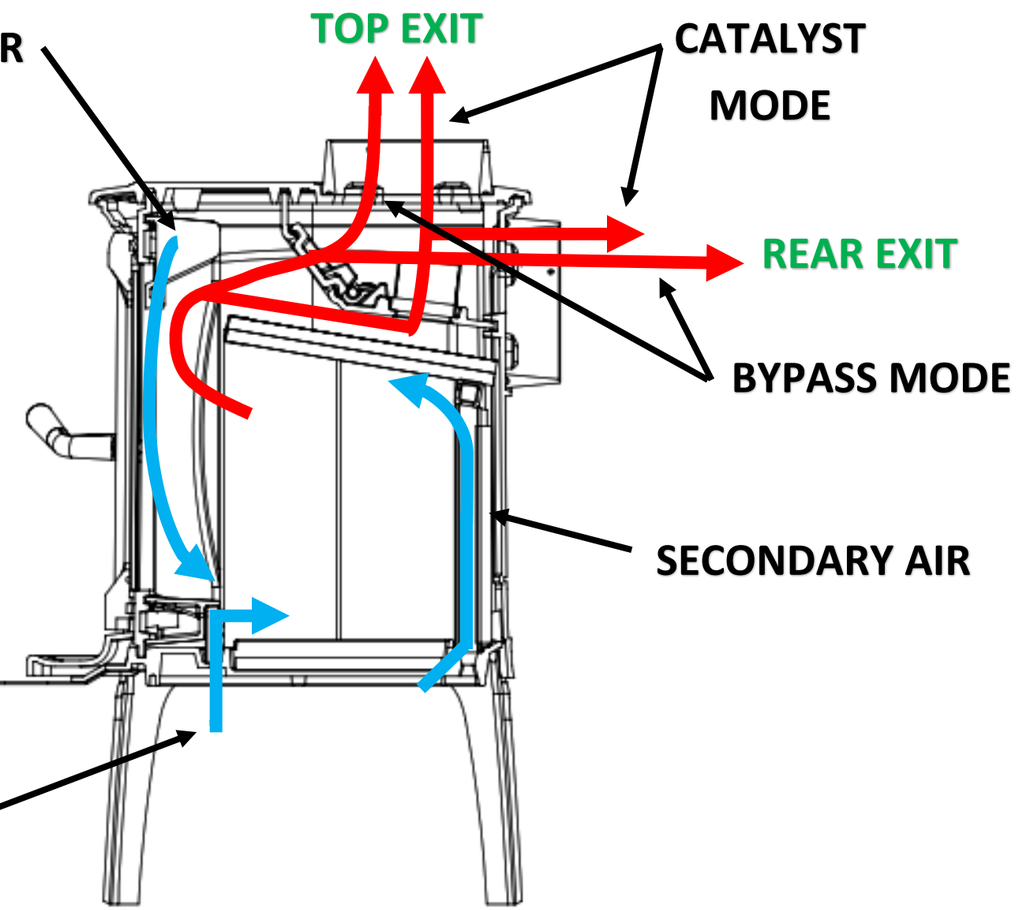

WEIGHT:

REVISIONS				
ECO	REV.	DESCRIPTION	DATE	APPROVED

VIEWS ARE THIRD ANGLE

This document submitted by HearthStone is the property of HearthStone and may contain information of a proprietary nature and shall not be copied or duplicated in whole or in part or used in whole or in part for any purpose other than that which is necessary for the preparation of bids or fabrication. Please return to HearthStone.

UNLESS OTHERWISE SPECIFIED:
TOLERANCES ARE:
FRACTIONS ± 1/64 DECIMALS .XX ± .015 .XXX ± .005 ANGLES ± 1/4°

1.) DIMENSIONS ARE IN INCHES / MM
2.) ALL MACHINED SURFACES TO BE DE-BURRED AND SMOOTHED

MATERIAL:

FINISH:

CAD GENERATED DRAWING.
DO NOT MANUALLY UPDATE

APPROVALS	DATE
DRAWN	4/22/2019
CHECKED	
RESP ENG	
MFG ENG	
QUAL ENG.	

hearthstone

CRAFTSBURY 2

EPA AIR FLOW

SIZE B | HEARTHSTONE DWG. NO. 8392 | REV.

SCALE: 1:1 | HERGOM DWG. NO. | SHEET 1 OF 1

U.S. ENVIRONMENTAL PROTECTION AGENCY (EPA)
30-DAY NOTIFICATION FORM
PURSUANT TO 40 CFR PART 60 SUBPARTS AAA AND QQQQ
2015 STANDARDS OF PERFORMANCE FOR NEW RESIDENTIAL WOOD HEATERS, NEW RESIDENTIAL HYDRONIC HEATERS AND FORCED-AIR FURNACES

Disclaimer: The statutory provisions and the EPA regulations described in this document contain legally binding requirements. This document is not a substitute for those provisions or regulations, nor is it a regulation itself. In the event of a discrepancy, please refer to 40 CFR PART 60 Subparts AAA AND QQQQ, Sections 60.533 and 60.5475. This document may be revised periodically without public notice. If you have additional questions, please contact Rafael Sanchez at 202-564-7028 or via email at sanchez.rafael@epa.gov.

- **The manufacturer of an affected wood/pellet heater/central heater model line must notify the Administrator of the date that certification testing is scheduled to begin by email to WoodHeaterReports@epa.gov.**
- **This notice must be received by the EPA at least 30 days before the start of testing.**

GENERAL INFORMATION						
Manufacturer's Name: Hearthstone QHHP						
Appliance Type (Circle One):	☒ Adjustable Burn Rate Wood Heater	☐ Pellet Stove	☐ Single Burn Rate Heater	☐ Hydronic Heater	☐ Forced Air Furnace	☐ Other:
Hydronic Heater Type (Circle One):	☐ Traditional	☐ Full Storage	☐ Partial Storage	☐ Indoor/Outdoor	☐ Other:	
Forced-Air Furnace Type (Circle One):	☐ Small (less than 65,000 BTU/hr heat output)		☐ Large (greater than 65,000 BTU/hr heat output)		☐ Other:	
Fuel Type:	☒ Crib	☐ Pellet	☐ Cordwood	☐ Other:		
Model Name and Number: Craftsbury 8392/ Green Mountain 40 8640/ Hipster 14 AMB8240						
Catalyst: ☒ **Yes** ☐ **No**						
Mailing Address: 317 Stafford Ave						
Street Address: 317 Stafford Ave						
City: Morrisville	**State:** VT	**ZIP Code:** 05661				
Phone: 802 851 4044	**Fax:** N/A	**Web Site:** www.hearthstonestoves.com				
Address of Manufacturing Facility: 317 Stafford Ave						
City: Morrisville	**State:** VT	**ZIP Code:** 05661				
EPA APPROVED TEST LABORATORY						
Name and Title of Authorized Representative: Danick Power						
Company: Services Polytests inc.						

U.S. ENVIRONMENTAL PROTECTION AGENCY (EPA)
30-DAY NOTIFICATION FORM
PURSUANT TO 40 CFR PART 60 SUBPARTS AAA AND QQQQ
2015 STANDARDS OF PERFORMANCE FOR NEW RESIDENTIAL WOOD HEATERS, NEW RESIDENTIAL HYDRONIC HEATERS AND FORCED-AIR FURNACES

Disclaimer: The statutory provisions and the EPA regulations described in this document contain legally binding requirements. This document is not a substitute for those provisions or regulations, nor is it a regulation itself. In the event of a discrepancy, please refer to 40 CFR PART 60 Subparts AAA AND QQQQ, Sections 60.533 and 60.5475. This document may be revised periodically without public notice. If you have additional questions, please contact Rafael Sanchez at 202-564-7028 or via email at sanchez.rafael@epa.gov.

- **The manufacturer of an affected wood/pellet heater/central heater model line must notify the Administrator of the date that certification testing is scheduled to begin by email to WoodHeaterReports@epa.gov.**
- **This notice must be received by the EPA at least 30 days before the start of testing.**

Phone: 450 741-3636	**E-mail: Dpower@polytests.com**	**Fax: NA**
City: St-jean-sur-richelieu	**State: Canada, Quebec**	**ZIP Code: J3B 7S7**
EPA APPROVED THIRD-PARTY CERTIFIER		
Name and Title of Authorized Representative: John Steinert, General Manager, Portland Laboratory		
Company: PFS-TECO, Inc.		
Phone: 580 650 0088	**E-mail:** john.steinert@pfsteco.com	**Fax:** N/A
City: Clackamas	**State:** OR	**ZIP Code:** 97015
COMPLIANCE TEST INFORMATION		
Test Method(s): EPA Method 28R, ASTM E2515-11, ASTM E2780, CSA B415.1-10		
Date(s) of Proposed Test: Jan 18th thru Jan 22nd		
Testing Location: Polytests Services Inc. 695 B rue Gaudette, St-Jean-sur-Richelieu Québec, Canada, J3B 7S7 *450.741.3636*		

U.S. ENVIRONMENTAL PROTECTION AGENCY (EPA)
30-DAY NOTIFICATION FORM
PURSUANT TO 40 CFR PART 60 SUBPARTS AAA AND QQQQ
2015 STANDARDS OF PERFORMANCE FOR NEW RESIDENTIAL WOOD HEATERS, NEW RESIDENTIAL HYDRONIC HEATERS AND FORCED-AIR FURNACES

Disclaimer: The statutory provisions and the EPA regulations described in this document contain legally binding requirements. This document is not a substitute for those provisions or regulations, nor is it a regulation itself. In the event of a discrepancy, please refer to 40 CFR PART 60 Subparts AAA AND QQQQ, Sections 60.533 and 60.5475. This document may be revised periodically without public notice. If you have additional questions, please contact Rafael Sanchez at 202-564-7028 or via email at sanchez.rafael@epa.gov.

- **The manufacturer of an affected wood/pellet heater/central heater model line must notify the Administrator of the date that certification testing is scheduled to begin by email to WoodHeaterReports@epa.gov.**
- **This notice must be received by the EPA at least 30 days before the start of testing.**

Simon Booth, Engineering Lab Manager
Print Name and Title of Authorized Official

Simon Booth

Signature

12/1/2020
Date

Remarks:

The proposed testing is to validate catalytic equivalency of a new model of catalyst produced by Applied Ceramics, Inc. Vendor part number WF-415000106.

v1

U.S. Environmental Protection Agen
Applicability Determination Index

Control Number: WDS-138

Category:	Woodstoves
EPA Office:	SSCD
Date:	07/06/1990
Title:	Catalyst Equivalency
Recipient:	Fisher, Mark
Author:	Seitz, John S.

Subparts: Part 60, AAA, New Residential Wood Heaters

References: 60.533(k)(4)

Abstract:

See below. Determination available in abstract form only. Included under "Letter" facilitate database word searching.

Letter:

Control Number: WDS-138

"What procedure will EPA use to determine catalyst equivalency after July 1, 199

"EPA will grant equivalency to new catalysts using the procedure previously used Oregon Department of Environmental Quality (DEQ). This procedure requires a fu certification test series with the new catalyst in a reference stove (Blaze King Prin Prototype) with the resultant weighted average emission rate of not more than on

UNITED STATES ENVIRONMENTAL PROTECTION AGENCY
WASHINGTON, DC 20460

OFFICE OF
COMPLIANCE

DEC 15 2016

Chris Neufeld
Vice President
Blaze King Industries, Inc.
146 A Street
Walla Walla, Washington 99362

RE: Blaze King Industries, Inc. (Blaze King) Request for Catalyst Suitable Replacement Procedures

Dear Mr. Neufeld:

This letter is in response to the February 3, 2016, Blaze King letter requesting the United States Environmental Protection Agency (EPA) implement a program to allow catalyst equipped wood heater manufacturers and suppliers to seek suitable replacement status during the life cycle of the product. As discussed below, replacement catalysts may be used if equivalency is properly demonstrated.

To have a catalyst deemed suitable for replacement, equivalency testing must be conducted by an EPA-approved test laboratory. Consistent with the 2015 Standards of Performance for New Residential Wood Heaters, New Residential Hydronic Heaters and Forced-Air Furnaces (Subpart AAA) (2015 Standards), the manufacturer must notify the EPA of the date that certification testing (catalyst equivalency testing) is scheduled to begin as stated in Section 60.534(g). This notice must be received by the EPA at least 30 days before the start of testing. EPA will consider the following steps to be adequate to demonstrate replacement catalyst equivalency:

1) The manufacturer uses the same test method as the original certification test was conducted. If the original certification test method is no longer valid, the manufacturer requests an alternative test method prior to testing.

2) The replacement catalyst is aged 50 hours prior to catalytic equivalency testing. The catalyst is tested in the same model or model line unit in which the original catalyst was tested.

3) Both a Category 1 run and Category 4 run are conducted by an EPA-approved test laboratory.

4) The new Category 1 run is compared to the original Category 1 run, and the new Category 4 run is compared to the original Category 4 run. The new runs are not more than 0.5 grams/hour greater than the original certification test results for each run. They are compared separately, with no averaging. In equation form:

Replacement catalyst category 1 ≤ (original catalyst category 1 + 0.5g/hr)

AND

Replacement catalyst category 4 ≤ (original catalyst category 4 + 0.5g/hr)

As noted in Section 60.533(k)(4)[1], the EPA Administrator must approve the change in the catalyst in advance, with proper documentation of the equivalency testing. This documentation consists of the original certification test report category 1 and 4 data and the new category 1 and 4 test data results. All demonstration test data must be sent to WoodHeaterReports@epa.gov within 60 days after the date of completing the test. EPA considers the catalyst equivalency testing to be a form of certification testing governed by the provisions in Section 60.534.

The EPA finds the request outside the scope of an applicability determination. The term "applicability determination" is limited to the Agency's formal decisions, issued in response to a non-hypothetical and site-specific request about the applicability of a specific rule to a specific facility. Therefore, the EPA considers this response to be a regulatory interpretation to a source request for clarification.[2]

This response has been prepared in consultation with the Office of Air Quality, Planning, and Standards, and the Office of General Counsel. If you have any questions, please contact Rafael Sanchez of my staff at 202-564-7028 or email at sanchez.rafael@epa.gov.

Sincerely,

Edward J. Messina

Edward J. Messina, Director
Monitoring, Assistance, and Media Programs Division
Office of Compliance

[1] A change in the make, model or composition of a catalyst is presumed to affect particulate matter and carbon monoxide emissions and efficiency, unless the change has been requested by the heater manufacturer and has been approved in advance by the Administrator, based on test data that demonstrate that the replacement catalyst is equivalent to or better than the original catalyst in terms of particulate matter emission reduction.
[2] This regulatory interpretation updates EPA Applicability Determination WDS-138 (July 6, 1990).

cc: Amanda Aldridge, OAQPS
Adam Baumgart-Getz, OAQPS
Mike Toney, OAQPS
Scott Jordan, OGC
Sara Ayres, OC

U.S. ENVIRONMENTAL PROTECTION AGENCY (EPA)
2015 Standards of Performance for New Residential Wood Heaters, New Residential Hydronic Heaters and Forced-Air Furnaces Application
40 CFR PART 60 SUBPARTS AAA AND QQQQ

Disclaimer: The statutory provisions and the EPA regulations described in this document contain legally binding requirements. This document is not a substitute for those provisions or regulations, nor is it a regulation itself. In the event of a discrepancy, please refer to 40 CFR PART 60 Subparts AAA AND QQQQ, Sections 60.533(b), 60.5475(b), and Appendix A–8. This document may be revised periodically without public notice. If you have additional questions, please contact Rafael Sanchez at 202-564-7028 or via email at sanchez.rafael@epa.gov.

Contents

Application for us epa wood heater certification pursuant to 40 cfr PART 60 Subparts AAA and QQQQ 1

Application for A Certificate of Compliance pursuant to 40 cfr PART 60 Subparts AAA and QQQQ 2

2015 Standards of PerfoRmance for New Residential Wood Heaters, new residential hydronic heaters and forced-air furnaces 2

General Information 2

Manufacturer's Authorized Representative INFORMATION 2

EPA-Approved Test Laboratory 3

Compliance Statements and Acknowledgements – Sections 60.533(b) and 60.5475(b) 4

Instructions: Please read the below statements and affirmations and address accordingly 4

For emissions data summary tables see attachments 4

Wood Burning Heaters 7

I. Test Method 28R for Certification and Auditing of Wood Heaters 7

A. Summary Results – Adjustable Wood Burning Heaters 7

APPLICATION FOR A CERTIFICATE OF COMPLIANCE PURSUANT TO 40 CFR PART 60 SUBPARTS AAA AND QQQQ

2015 STANDARDS OF PERFORMANCE FOR NEW RESIDENTIAL WOOD HEATERS, NEW RESIDENTIAL HYDRONIC HEATERS AND FORCED-AIR FURNACES

GENERAL INFORMATION

Manufacturer's Name: Hearthstone

Heater Type (Circle One):	Adjustable Burn Rate Wood Heater	Pellet Stove	Single Burn Rate Heater	Hydronic Heater	Forced Air Furnace	Other:
Hydronic Heater Type (Circle One):	Traditional	Full Storage	Partial Storage	Indoor/Outdoor	Other:	
Forced-Air Furnace Type (Circle One):	Small (less than 65,000 BTU/hr heat output)		Large (greater than 65,000 BTU/hr heat output)		Other:	
Fuel Tested:	Crib	Pellet	Cordwood	Wood Chips	Other:	

Test Method(s) Method 28R

Catalyst: Yes / No

Model Name and Design Number (The model name and design number must clearly distinguish one model from another. The name and design number cannot include the EPA symbol or logo or name or derivatives such as "EPA): Green Mountain 40 Model 8640 Craftsbury Model 8392 Hipster 14 AMB8240

Physical Address (Street number and Address, not P.O. Box):
317 Stafford Ave

Mailing Address:
Same

City: Morrisville	**State: VT**	**ZIP Code: 05661**
Phone: 802-851-4044	**Email:** SBOOTH@HEARHTSONESTOVES.COM	**Website:** WWW.HEARTHSTONESTOVES.COM

EPA Submission Date of 30 day Notice: 12/1/2020

MANUFACTURER'S AUTHORIZED REPRESENTATIVE INFORMATION

Name: Simon Booth

Position/Title: Engineering Manager

Address: 317 Stafford Ave

City: Morrisville	**State: VT**	**ZIP Code: 05661**
Phone: 802-851-4044	**E-mail:** sbooth@hearthstonestoves.com	**Website: www.hearthstonestoves.com**

Remarks:

APPLICATION FOR A CERTIFICATE OF COMPLIANCE PURSUANT TO 40 CFR PART 60 SUBPARTS AAA AND QQQQ

2015 STANDARDS OF PERFORMANCE FOR NEW RESIDENTIAL WOOD HEATERS, NEW RESIDENTIAL HYDRONIC HEATERS AND FORCED-AIR FURNACES

EPA-APPROVED TEST LABORATORY		
Name of Test Laboratory: **Polytests Services inc.**		
Name of Person Authorized or Responsible for Conducting Compliance Test: Danick Power		
Position/Title: VP operation		
Address: 695-B Gaudette,		
City: St-Jean-sur-Richelieu	**State: Quebec, Canada**	**ZIP Code: J3B 7S7**
Phone: 450 741-3636	**Email: dpower@polytests.com**	**Website: www.polytests.com**
Remarks:		

EPA-Approved Third Party Certifier		
Name of Certifier Entity: PFS TECO		
Name of Person Authorized or Responsible for Reviewing Test Report and/or Issuing Certification of Conformity: John Steinert		
Position/Title: General Manager, Portland Laboratory		
Address: 11785 SE Highway 212, Suite 305		
City: Clackamas	**State: Oregon**	**ZIP Code: 97015**
Phone: 503-650-0088	**Email:** **John.steinert@pfsteco.com**	**Website: www.pfsteco.com**
Remarks:		

COMPLIANCE STATEMENTS AND ACKNOWLEDGEMENTS – SECTIONS 60.533(B) AND 60.5475(B)

INSTRUCTIONS: PLEASE READ THE BELOW STATEMENTS AND AFFIRMATIONS AND ADDRESS ACCORDINGLY.

FOR EMISSIONS DATA SUMMARY TABLES SEE ATTACHMENTS

1. Engineering Drawings Statement

Engineering drawings and specifications of components that may affect emissions (including specifications for each component listed in paragraphs (k)(2), (3) and (4) of 60.533(b) and 60.5475(b). Manufacturers may use assembly or design drawings that have been prepared for other purposes, but must designate on the drawings the dimensions of each component listed in paragraph (k) of this section. Manufacturers must identify tolerances of components listed in paragraph (k)(2) of 60.533(b) and 60.5475(b) that are different from those specified in that paragraph, and show that such tolerances cannot reasonably be anticipated to cause wood heaters in the model line to exceed the applicable emission limits. The drawings must identify how the emission-critical parts, such as air tubes and catalyst, can be readily inspected and replaced.

Engineering drawings and specifications of components that may affect emissions are included with the CBI certification report. Dimensions and tolerances are in line with 60.533 (b), and our quality assurance plan and quality inspection sheets ensure on-going quality and conformance. Replacement instructions for emission-critical components are included in our operator's manual.

2. Firebox Statement Requirement

A statement whether the firebox or any firebox component (including the materials listed in paragraph (k)(3) of 60.533(b) and 60.5475(b) will be composed of material different from the material used for the firebox or firebox component in the wood heater on which certification testing was performed, a description of any such differences and demonstration that any such differences may not reasonably be anticipated to adversely affect emissions or efficiency.

All K-list items as described in 60.533 (b) on the certification test unit will be similar in all material respects to the production units.

3. CBI

Clear identification of any claimed confidential business information (CBI). Submit such information under separate cover to the EPA CBI Office; Attn: Residential Wood Heater Compliance Program Lead, 1200 Pennsylvania Ave., NW, Room 7138, MS:2227A, Washington, DC 20460. **Note that all emissions data, including all information necessary to determine emission rates in the format of the standard, cannot be claimed as CBI.**

A CBI and Non-CBI report will be provided separately.

4. Valid Certification Statement

All documentation pertaining to a valid certification test, including the complete test report and, for all test runs: Raw data sheets, laboratory technician notes, calculations and test results. Documentation must include the items specified in the applicable test methods. Documentation must include discussion of each test run and its appropriateness and validity, and must include detailed discussion of all anomalies, whether all burn rate categories were achieved, any data not used in the calculations and, for any test runs not completed, the data collected during the test run and the reason(s) that the test run was not completed and why. The burn rate for the low burn rate category must be no greater than the rate that an operator can achieve in home use and no greater than is advertised by the manufacturer or retailer. The test report must include a summary table that clearly presents the individual and overall emission rates, efficiencies and heat outputs. Submit the test report and all associated required information, according to the procedures for electronic reporting specified in § 60.537(f) and 60.5475(f).

A valid certification test report with all required documentation as specified above has been submitted by Polytests.

5. Warranties

A copy of the warranties for the model line, which must include a statement that the warranties are void if the unit is used to burn materials for which the unit is not certified by the EPA and void if not operated according to the owner's manual.

The warranty is detailed in the Operator's manual, which is provided with Polytest's report.

6. Q/A Statement

A statement that the manufacturer will conduct a quality assurance program for the model line that satisfies the requirements of paragraph (m) of this section.

Hearthstone is contracted with PFS-Teco as our third party certifier to review our QA/QC program, and to provide at least annual audits. Hearthstone's QA plan is included with the certification report.

7. Laboratory Sealing of Unit

A statement describing how the tested unit was sealed by the laboratory after the completion of certification testing and asserting that such unit will be stored by the manufacturer in the sealed state until 5 years after the certification test.

The unit has been sealed by Polytests and will be transferred back to Hearthstone. Hearthstone will store the unit in a sealed state for at least five years.

8. Statements that the wood heaters manufactured under this certificate will be—

(i) Similar in all material respects that would affect emissions as defined in § 60.531 to the wood heater submitted for certification testing, and labeled as prescribed in § 60.536 and 60.5478.

(ii) Accompanied by an owner's manual that meets the requirements in § 60.536 and 60.5478. In addition, a copy of the owner's manual must be submitted to the Administrator and be available to the public on the manufacturer's web site.

i) The tested unit is the same in all material respects that would affect emissions to production units, and production units will be labeled in accordance with 60.536

(ii) All production units will include a copy of the owner's operation/installation manual that meets the requirements as specified in 60.536. A copy of the owner's manual has been provided with the report, and will be made available on Hearthstone's website once the unit is available for sale.

9. Third Party Certification Statement

A statement that the manufacturer has entered into contracts with an approved laboratory and an approved third-party certifier that satisfy the requirements of paragraph (f) of this section.

Hearthstone is contracted with PFS-Teco as our third party certifier.

10. Approved laboratory/third party Statement

A statement that the approved laboratory and approved third-party certifier are allowed to submit information on behalf of the manufacturer, including any claimed to be CBI.

Polytests and PFS-Teco are allowed to submit information related to EPA emissions testing performed by Polytests on behalf of Hearthstone, including any claimed CBI.

11. Manufacturer's Website Certification Test Reports Availability Statement

A statement that the manufacturer will place a copy of the certification test report and summary on the manufacturer's web site available to the public within 30 days after the Administrator issues a certificate of compliance.

Hearthstone will place a copy of the Non-CBI (or public version) of the certification test report and summary on our website as soon as the unit becomes available for sale.

12. Transferability Acknowledgement Statement

A statement of acknowledgment that the certificate of compliance cannot be transferred to another manufacturer or model line without written approval by the Administrator.

Hearthstone acknowledges that the certificate of compliance cannot be transferred to another manufacturer or model line without written approval by the Administrator.

13. Statement about Selling Wood Heaters without an EPA Certificate

A statement acknowledging that it is unlawful to sell, distribute or offer to sell or distribute an affected wood heater without a valid certificate of compliance.

Hearthstone acknowledges that it is unlawful to sell, distribute or offer to sell or distribute an affected wood heater without a valid certificate of compliance.

Print Name and Title: Simon Booth, Engineering Manager	**Date: 2/3/2021**

Signature of responsible representative of the manufacturer certifying the accuracy of the above statements:

The authorized or responsible party whose signature is above is certifying that the manufacturer has complied with and will continue to comply with all requirements of the 2015 NSPS for compliance certification and that the manufacturer remains responsible for compliance regardless of any error by the test laboratory or third-party certifier.

Attachments

Instructions: Please complete the section applicable to your certification request. You may substitute your own data tables in lieu of the ones shown below provided that all the information is captured.

WOOD BURNING HEATERS

I. Test Method 28R for Certification and Auditing of Wood Heaters

A. SUMMARY RESULTS – ADJUSTABLE WOOD BURNING HEATERS

ORIGINAL EMISSIONS RESULTS FROM REPORT PI-20189

Test No.	Burn Rate (Kg/hr)	(E) Ave. Emission Rate g/hr	(OHE) %	Heat Output (BTU/HR)	CSA B415.1 CO emission g/min
1	1,029	0,45	0,808	15 640	0,486
2	1,773	1,67	0,765	25 443	0,143
3	2,269	2,78	0,736	31 581	1,00
4	1,167	0,61	0,809	17 805	0,272
6	0,920	0,69	0,802	13 876	0,6778
Weighted particulate emission average of 4 test runs: 1.07 grams per hour.					
Weighted average HHV efficiency of 4 test runs: 79.0%.					
Average Co 0.52 gr/min					

ORIGINAL EMISSIONS RESULTS FROM REPORT PI-20189

Run Number	Test Date (AAA-MM-DD)	Emission Rate (g/hr)	Burn Rate (kg/hr)	1st hour Emission Rate (g/hr)	CSA B415.1 CO emission Gr/hr	CSA B415.1 CO emission Gr/Kg dry
1 (PI-20189)	2019-03-18	0,45	1,029	1,39	29,14	28,30
2 (PI-20189)	2019-03-19	1,67	1,773	3,11	8,56	4,84
3 (PI-20189)	2019-03-20	2,78	2,269	4,09	60,10	26,32
4 (PI-20189)	2019-03-21	0,61	1,167	1,27	16,33	13,94
5 (PI-20189)	2019-03-25	0,41	1,077	1,30	44,02	40,87
6 (PI-20189)	2019-03-26	0,69	0,920	1,82	40,67	44,18

EMISSION RESULTS FROM CATALYST EQUIVALENCY RUN

Run Number	Test Date (AAA-MM-DD)	Emission Rate (g/hr)	Burn Rate (kg/hr)	1st hour Emission Rate (g/hr)	CSA B415.1 CO emission Gr/hr	CSA B415.1 CO emission Gr/Kg dry
1	2021-01-18	1,99	2,238	2,41	11,34	5,27
2	2021-01-19	0,79	1,199	2,09	52,45	43,87

- Run 1 compared to original test series Run 3 and comply
- Run2 compared to original test series Run 4 and comply